LEGEND:

5569 - N A * * - * - *

- BASE NUMBER
- CIRCUIT SIZE
- ASSEMBLY
- MOUNTING OPTION (SEE NOTE 6.)
- PLATING (SEE NOTE 2.)
- HOUSING MAT'L. (SEE NOTE 1.)
- PACKAGING (SEE NOTE 4.)

CIRCUIT SIZE	DIM. "A"	DIM. "B"
6	.54 (13.8)	.33 (8.4)
8	.71 (18.0)	.50 (12.6)
10	.87 (22.2)	.66 (16.8)
12	1.04 (26.4)	.83 (21.0)
14	1.20 (30.6)	.99 (25.2)
16	1.37 (34.8)	1.16 (29.4)
18	1.54 (39.0)	1.32 (33.6)
20	1.70 (43.2)	1.49 (37.8)
22	1.87 (47.4)	1.65 (42.0)
24	2.03 (51.6)	1.82 (46.2)

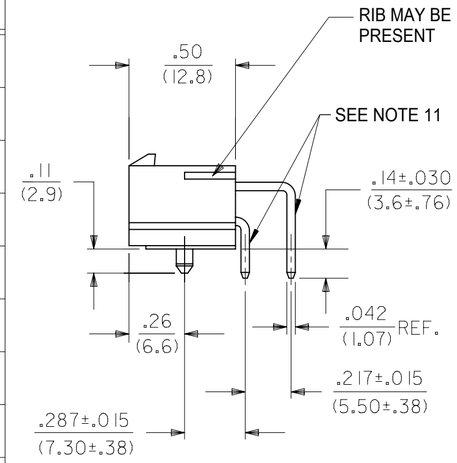

DIMENSIONS TYPICAL FOR ALL CIRCUITS SIZES

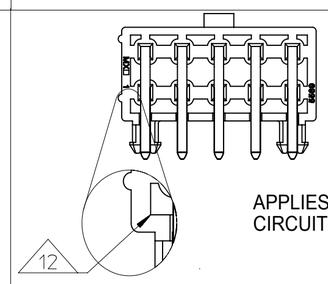

APPLIES TO ALL CIRCUIT SIZES

4 PLACES

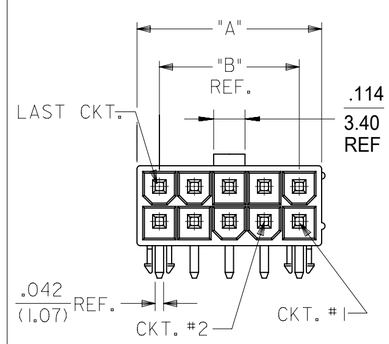

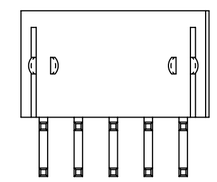

5569-*A2*-*

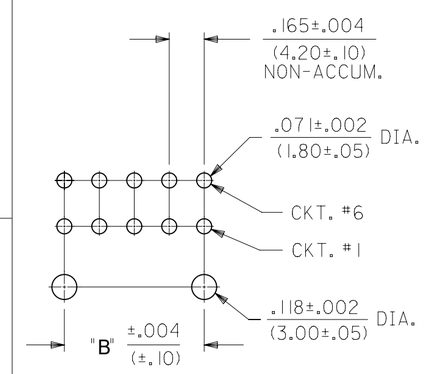

RECOMMENDED HOLE LAYOUT FOR .070/(1.78) MAX. THICK P.C. BOARD VIEWED FROM COMPONENT SIDE

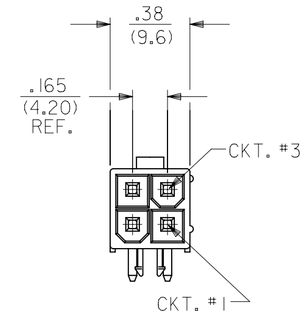

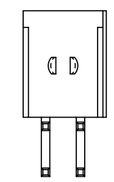

5569-04A2*-*

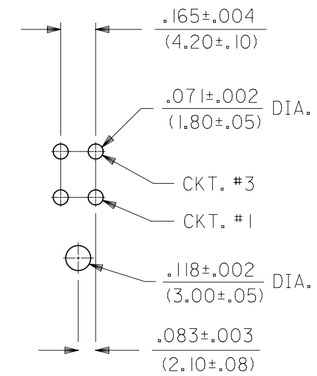

RECOMMENDED HOLE LAYOUT FOR .070/(1.78) MAX. THICK P.C. BOARD VIEWED FROM COMPONENT SIDE

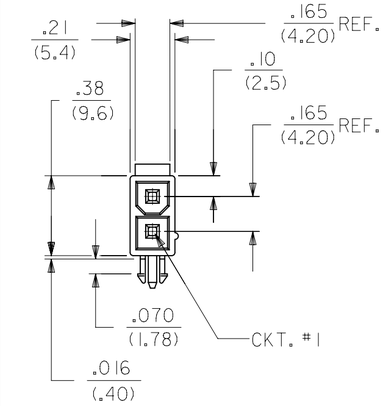

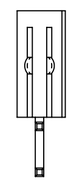

5569-02A2*-*

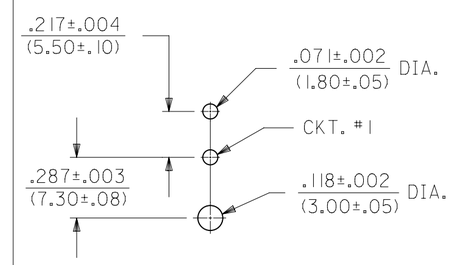

RECOMMENDED HOLE LAYOUT FOR .070/(1.78) MAX. THICK P.C. BOARD VIEWED FROM COMPONENT SIDE

DIMENSIONS IN THIS VIEW ARE TYPICAL FOR CIRCUIT SIZES 6 THRU 24

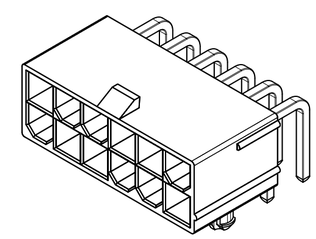

NOTES:

1) MATERIAL:
   HOUSING:
   "BLANK" = NYLON (PA66), LOW HALOGEN, UNFILLED, UL94V-2, COLOR: NATURAL
   "BL" = NYLON (PA66), LOW HALOGEN, UNFILLED, UL94V-2, COLOR: BLACK
   "210" = NYLON (PA66), LOW HALOGEN, UNFILLED, UL94V-0, COLOR: NATURAL
   "400" = NYLON (PA66), LOW HALOGEN, UNFILLED, UL94V-0, COLOR: BLACK
   TERMINAL:
   BRASS ALLOY
2) FINISH (PLATING):
   G, GS = .000030/(0.00076) MIN. SELECT GOLD OVER .000100/(0.00254) MIN.SELECT MATTE TIN OVER .000050/(0.00127) MIN. NICKEL OVERALL
   GS2 = .000015/(0.00038) MIN. SELECT GOLD OVER .000100/(0.00254) MIN.SELECT MATTE TIN OVER .000050/(0.00127) MIN. NICKEL OVERALL
   GS3 = .000050/(0.00127) MIN. SELECT GOLD OVER .000100/(0.00254) MIN.SELECT MATTE TIN OVER .000050/(0.00127) MIN. NICKEL OVERALL
   BLANK, S, MS = .000100/(0.00254) MIN. MATTE TIN OVER .000050/(0.00127) MIN. NICKEL OVERALL
   RM = .000060/(0.00152) MIN. REFLOWED MATTE TIN OVER .000050/(0.00127) MIN. NICKEL OVERALL
3) PRODUCT SPECIFICATION: PS-5556-001
4) PACKAGING:
   "BLANK" = BULK PACKED PER PK-5569-002 (NOT RECOMMENDED DUE TO SHIPPING AND HANDLING DAMAGE).
   "T" = TRAY PACKED PER PK-5569-003 (RECOMMENDED FOR NEW APPLICATIONS)
5) PART MATES WITH MINI-FIT JR. RECEPTACLE SERIES 5557.
6) MOUNTING OPTIONS:
   1 = SCREW MOUNT (SEE SD-5569-NA* SERIES DRAWING)
   2 = PEG MOUNT
7) DISCOLORATION IN THE BANDOLIER CARRIER AREA OF THE PIN IS INHERENT TO THE PLATING PROCESS AND IS DUE TO THE MASKING EFFECT OF THE CARRIER. THIS DISCOLORATION IS IN A NON-FUNCTIONAL AREA OF THE PIN AND WILL NOT AFFECT THE PERFORMANCE OF THE HEADER ASSEMBLY.
8) PART CONFORMS TO CLASS "B" REQUIREMENTS OF COSMETIC SPECIFICATION PS-45499-002.
9) CONNECTORS ARE NOT TO BE MATED AND UNMATED WHILE CIRCUITS ARE LIVE.
10) PARTS ARE NOT DESIGNED FOR CURRENT SHARING.
11) FORMING MARKS ON PINS ARE ACCEPTABLE.
12) CORNER CORE-OUTS ARE OPTIONAL AND MAY OR MAY NOT BE PRESENT.

THIS DRAWING REPLACES DRAWING SDA-5569-NA2*-*

DOCUMENT STATUS	P1	RELEASE DATE	2018/02/22 21:31:14

SYMBOLS: EA = 0; EC = 0; EP = 0; S = 0; ▼ = 0; C = 0; ☒ = 0; ■ = 0; V = 0

THIS DRAWING CONTAINS INFORMATION THAT IS PROPRIETARY TO MOLEX ELECTRONIC TECHNOLOGIES, LLC AND SHOULD NOT BE USED WITHOUT WRITTEN PERMISSION

DIMENSION UNITS	SCALE
IN/MM	4:1

GENERAL TOLERANCES (UNLESS SPECIFIED)

	MM	INCH
4 PLACES	±	±
3 PLACES	±	± 0.01
2 PLACES	± 0.25	± 0.015
1 PLACE	± 0.38	±
0 PLACES	±	±
ANGULAR TOL	± 0.5 °	

DRAFT WHERE APPLICABLE MUST REMAIN WITHIN DIMENSIONS

CURRENT REV DESC: MIGRATE TO ECTR

EC NO: 172489
DRWN: ANESSER 2018/01/26
CHK'D: JBELL 2018/02/20
APPR: FSMITH 2018/02/22

INITIAL REVISION:
DRWN: RJF 1988/02/16
APPR: FSMITH 2016/12/20

THIRD ANGLE PROJECTION | DRAWING: C-SIZE | SERIES: 5569

molex

MINI-FIT JR RIGHT ANGLE HEADER ASSEMBLIES WITH MOUNTING PEGS

PRODUCT CUSTOMER DRAWING

DOCUMENT NUMBER	DOC TYPE	DOC PART	REVISION
55690002-SD	PSD	000	A

MATERIAL NUMBER	CUSTOMER	SHEET NUMBER
SEE CHART	GENERAL MARKET	1 OF 4

FORMAT: Eng-tega-master-tb-prod-C
REVISION: D
DATE: 2017/10/06

BULK PACKAGED PER PK-5569-002
THESE PART NUMBERS ARE NOT RECOMMENDED, FOR NEW APPLICATIONS USE THE TRAY PACKED PART NUMBERS

PART NUMBER	ENG. NUMBER	CKT. SIZE	PLATING (NOTE 2)	HSG MAT'L	PART NUMBER	ENG. NUMBER	CKT. SIZE	PLATING (NOTE 2)	HSG MAT'L
39-30-1020	5569-02A2	2	MATTE TIN OVER NICKEL SEE NOTE 2 OPTION "BLANK"	94V-2	39-30-0020	5569-02A2-210	2	MATTE TIN OVER NICKEL SEE NOTE 2 OPTION "BLANK"	94V-0
39-30-1040	5569-04A2	4			39-30-0040	5569-04A2-210	4		
39-30-1060	5569-06A2	6			39-30-0060	5569-06A2-210	6		
39-30-1080	5569-08A2	8			39-30-0080	5569-08A2-210	8		
39-30-1100	5569-10A2	10			39-30-0100	5569-10A2-210	10		
39-30-1120	5569-12A2	12			39-30-0120	5569-12A2-210	12		
39-30-1140	5569-14A2	14			39-30-0140	5569-14A2-210	14		
39-30-1160	5569-16A2	16			39-30-0160	5569-16A2-210	16		
39-30-1180	5569-18A2	18			39-30-0180	5569-18A2-210	18		
39-30-1200	5569-20A2	20			39-30-0200	5569-20A2-210	20		
39-30-1220	5569-22A2	22			39-30-0220	5569-22A2-210	22		
39-30-1240	5569-24A2	24			39-30-0240	5569-24A2-210	24		
39-30-1021	5569-02A2G	2	30 µ" SELECT GOLD SEE NOTE 2 OPTION "G"	94V-2	39-30-1022	5569-02A2G-210	2	30 µ" SELECT GOLD SEE NOTE 2 OPTION "G"	94V-0
39-30-1041	5569-04A2G	4			39-30-1042	5569-04A2G-210	4		
39-30-1061	5569-06A2G	6			39-30-1062	5569-06A2G-210	6		
39-30-1081	5569-08A2G	8			39-30-1082	5569-08A2G-210	8		
39-30-1101	5569-10A2G	10			39-30-1102	5569-10A2G-210	10		
39-30-1121	5569-12A2G	12			39-30-1122	5569-12A2G-210	12		
39-30-1141	5569-14A2G	14			39-30-1142	5569-14A2G-210	14		
39-30-1161	5569-16A2G	16			39-30-1162	5569-16A2G-210	16		
39-30-1181	5569-18A2G	18			39-30-1182	5569-18A2G-210	18		
39-30-1201	5569-20A2G	20			39-30-1202	5569-20A2G-210	20		
NOT ASSIGNED	5569-22A2G	22			39-30-1222	5569-22A2G-210	22		
39-30-1241	5569-24A2G	24			39-30-1242	5569-24A2G-210	24		

THIS DRAWING REPLACES DRAWING SDA-5569-NA2*-*

DOCUMENT STATUS	P1	RELEASE DATE	2018/02/22 21:31:14

THIS DRAWING CONTAINS INFORMATION THAT IS PROPRIETARY TO MOLEX ELECTRONIC TECHNOLOGIES, LLC AND SHOULD NOT BE USED WITHOUT WRITTEN PERMISSION

SYMBOLS: FA = 0, FC = 0, FD = 0, S = 0, ▼ = 0, C = 0, ☒ = 0, ■ = 0, V = 0

DIMENSION UNITS: IN/MM
SCALE: 1:1

GENERAL TOLERANCES (UNLESS SPECIFIED)

	MM	INCH
4 PLACES	±	±
3 PLACES	±	± 0.01
2 PLACES	± 0.25	± 0.015
1 PLACE	± 0.38	±
0 PLACES	±	±
ANGULAR TOL	± 0.5 °	

DRAFT WHERE APPLICABLE MUST REMAIN WITHIN DIMENSIONS

CURRENT REV DESC: MIGRATE TO ECTR

EC NO: 172489
DRWN: ANESSER 2018/01/26
CHK'D: JBELL 2018/02/20
APPR: FSMITH 2018/02/22

INITIAL REVISION:
DRWN: RJF 1988/02/16
APPR: FSMITH 2016/12/20

THIRD ANGLE PROJECTION

DRAWING: C-SIZE
SERIES: 5569

molex

MINI-FIT JR RIGHT ANGLE
HEADER ASSEMBLIES WITH MOUNTING PEGS

PRODUCT CUSTOMER DRAWING

DOCUMENT NUMBER	DOC TYPE	DOC PART	REVISION
55690002-SD	PSD	000	A

MATERIAL NUMBER	CUSTOMER	SHEET NUMBER
SEE CHART	GENERAL MARKET	2 OF 4

FORMAT: Eng-lega-master-tb-prod-C
REVISION: D
DATE: 2017/10/06

TRAY PACKAGED PER PK-5569-003

PART NUMBER	ENG. NUMBER	CKT. SIZE	PLATING (NOTE 2)	HSG MAT'L	PART NUMBER	ENG. NUMBER	CKT. SIZE	PLATING (NOTE 2)	HSG MAT'L
26-01-3127	5569-02A2GS2-210-T	2	15 µ" SELECT GOLD SEE NOTE 2 OPTION "GS2"	94V-0	46999-0013	5569-02A2S-400-T	2	MATTE TIN OVER NICKEL SEE NOTE 2 OPTION "S"	BLACK 94V-0
26-01-3128	5569-04A2GS2-210-T	4			46999-0014	5569-04A2S-400-T	4		
NOT TOOLED	5569-06A2GS2-210-T	6			46999-0015	5569-06A2S-400-T	6		
NOT TOOLED	5569-08A2GS2-210-T	8			46999-0016	5569-08A2S-400-T	8		
NOT TOOLED	5569-10A2GS2-210-T	10			46999-0017	5569-10A2S-400-T	10		
NOT TOOLED	5569-12A2GS2-210-T	12			46999-0018	5569-12A2S-400-T	12		
NOT TOOLED	5569-14A2GS2-210-T	14			46999-0019	5569-14A2S-400-T	14		
NOT TOOLED	5569-16A2GS2-210-T	16			46999-0020	5569-16A2S-400-T	16		
NOT TOOLED	5569-18A2GS2-210-T	18			46999-0021	5569-18A2S-400-T	18		
NOT TOOLED	5569-20A2GS2-210-T	20			46999-0022	5569-20A2S-400-T	20		
NOT TOOLED	5569-22A2GS2-210-T	22			46999-0023	5569-22A2S-400-T	22		
NOT TOOLED	5569-24A2GS2-210-T	24			46999-0024	5569-24A2S-400-T	24		
26-01-3141	5569-02A2GS3-T	2	50 µ" SELECT GOLD SEE NOTE 2 OPTION "GS3"	94V-2	46999-0538	5569-02A2GS2-400-T	2	15 µ" SELECT GOLD SEE NOTE 2 OPTION "GS2"	BLACK 94V-0
26-01-3142	5569-04A2GS3-T	4			46999-0539	5569-04A2GS2-400-T	4		
26-01-3143	5569-06A2GS3-T	6			46999-0540	5569-06A2GS2-400-T	6		
26-01-3144	5569-08A2GS3-T	8			46999-0541	5569-08A2GS2-400-T	8		
NOT TOOLED	5569-10A2GS3-T	10			46999-0542	5569-10A2GS2-400-T	10		
NOT TOOLED	5569-12A2GS3-T	12			46999-0543	5569-12A2GS2-400-T	12		
NOT TOOLED	5569-14A2GS3-T	14			46999-0544	5569-14A2GS2-400-T	14		
26-01-3148	5569-16A2GS3-T	16			46999-0545	5569-16A2GS2-400-T	16		
NOT TOOLED	5569-18A2GS3-T	18			46999-0546	5569-18A2GS2-400-T	18		
NOT TOOLED	5569-20A2GS3-T	20			46999-0547	5569-20A2GS2-400-T	20		
NOT TOOLED	5569-22A2GS3-T	22			46999-0548	5569-22A2GS2-400-T	22		
NOT TOOLED	5569-24A2GS3-T	24			46999-0549	5569-24A2GS2-400-T	24		
46999-0001	5569-02A2S-BL-T	2	MATTE TIN OVER NICKEL SEE NOTE 2 OPTION "S"	BLACK 94V-2	46999-0515	5569-02A2G-400-T	2	30 µ" SELECT GOLD SEE NOTE 2 OPTION "G"	BLACK 94V-0
46999-0002	5569-04A2S-BL-T	4			46999-0516	5569-04A2G-400-T	4		
46999-0003	5569-06A2S-BL-T	6			46999-0517	5569-06A2G-400-T	6		
46999-0004	5569-08A2S-BL-T	8			46999-0518	5569-08A2G-400-T	8		
46999-0005	5569-10A2S-BL-T	10			46999-0519	5569-10A2G-400-T	10		
46999-0006	5569-12A2S-BL-T	12			46999-0520	5569-12A2G-400-T	12		
46999-0007	5569-14A2S-BL-T	14			46999-0521	5569-14A2G-400-T	14		
46999-0008	5569-16A2S-BL-T	16			46999-0522	5569-16A2G-400-T	16		
46999-0009	5569-18A2S-BL-T	18			46999-0523	5569-18A2G-400-T	18		
46999-0010	5569-20A2S-BL-T	20			46999-0524	5569-20A2G-400-T	20		
46999-0011	5569-22A2S-BL-T	22			46999-0525	5569-22A2G-400-T	22		
46999-0012	5569-24A2S-BL-T	24			46999-0526	5569-24A2G-400-T	24		

THIS DRAWING CONTAINS INFORMATION THAT IS PROPRIETARY TO MOLEX ELECTRONIC TECHNOLOGIES, LLC AND SHOULD NOT BE USED WITHOUT WRITTEN PERMISSION

SYMBOLS = 0

DIMENSION UNITS: IN/MM — SCALE: 1:1

GENERAL TOLERANCES (UNLESS SPECIFIED)

	MM	INCH
4 PLACES	±	±
3 PLACES	±	± 0.01
2 PLACES	± 0.25	± 0.015
1 PLACE	± 0.38	±
0 PLACES	±	±
ANGULAR TOL		± 0.5 °

DRAFT WHERE APPLICABLE MUST REMAIN WITHIN DIMENSIONS

CURRENT REV DESC: MIGRATE TO ECTR

EC NO: 172489
DRWN: ANESSER 2018/01/26
CHK'D: JBELL 2018/02/20
APPR: FSMITH 2018/02/22

INITIAL REVISION:
DRWN: RJF 1988/02/16
APPR: FSMITH 2016/12/20

THIRD ANGLE PROJECTION — DRAWING: C-SIZE — SERIES: 5569

molex

MINI-FIT JR RIGHT ANGLE HEADER ASSEMBLIES WITH MOUNTING PEGS

PRODUCT CUSTOMER DRAWING

DOCUMENT NUMBER	DOC TYPE	DOC PART	REVISION
55690002-SD	PSD	000	A

MATERIAL NUMBER	CUSTOMER	SHEET NUMBER
SEE CHART	GENERAL MARKET	3 OF 4

THIS DRAWING REPLACES DRAWING SDA-5569-NA2*-*

DOCUMENT STATUS	P1	RELEASE DATE	2018/02/22 21:31:14

FORMAT: Eng-tega-master-tb-prod-C
REVISION: D
DATE: 2017/10/06

TRAY PACKAGED PER PK-5569-003

PART NUMBER	ENG. NUMBER	CKT. SIZE	PLATING (NOTE 2)	HSG MAT'L	PART NUMBER	ENG. NUMBER	CKT. SIZE	PLATING (NOTE 2)	HSG MAT'L	PART NUMBER	ENG. NUMBER	CKT. SIZE	PLATING (NOTE 2)	HSG MAT'L
50-36-1757	5569-02A2S-T	2	MATTE TIN OVER NICKEL SEE NOTE 2 OPTION "S"	94V-2	50-36-1758	5569-02A2S-210-T	2	MATTE TIN OVER NICKEL SEE NOTE 2 OPTION "S"	94V-0	26-01-3114	5569-02A2GS2-T	2	15 µ" SELECT GOLD SEE NOTE 2 OPTION "GS2"	94V-2
50-36-1767	5569-04A2S-T	4			50-36-1768	5569-04A2S-210-T	4			26-01-3115	5569-04A2GS2-T	4		
50-36-1777	5569-06A2S-T	6			50-36-1778	5569-06A2S-210-T	6			26-01-3116	5569-06A2GS2-T	6		
50-36-1787	5569-08A2S-T	8			50-36-1788	5569-08A2S-210-T	8			NOT TOOLED	5569-08A2GS2-T	8		
50-36-1797	5569-10A2S-T	10			50-36-1798	5569-10A2S-210-T	10			NOT TOOLED	5569-10A2GS2-T	10		
50-36-1807	5569-12A2S-T	12			50-36-1808	5569-12A2S-210-T	12			26-01-3119	5569-12A2GS2-T	12		
50-36-1817	5569-14A2S-T	14			50-36-1818	5569-14A2S-210-T	14			NOT TOOLED	5569-14A2GS2-T	14		
50-36-1827	5569-16A2S-T	16			50-36-1828	5569-16A2S-210-T.	16			NOT TOOLED	5569-16A2GS2-T	16		
50-36-1837	5569-18A2S-T	18			50-36-1838	5569-18A2S-210-T	18			NOT TOOLED	5569-18A2GS2-T	18		
50-36-1847	5569-20A2S-T	20			50-36-1848	5569-20A2S-210-T	20			NOT TOOLED	5569-20A2GS2-T	20		
50-36-1857	5569-22A2S-T	22			50-36-1858	5569-22A2S-210-T	22			NOT TOOLED	5569-22A2GS2-T	22		
50-36-1867	5569-24A2S-T	24			50-36-1868	5569-24A2S-210-T	24			26-01-3126	5569-24A2GS2-T	24		
50-36-1755	5569-02A2GS-T	2	30 µ" SELECT GOLD SEE NOTE 2 OPTION "GS"	94V-2	50-36-1756	5569-02A2GS-210-T	2	30 µ" SELECT GOLD SEE NOTE 2 OPTION "GS"	94V-0					
50-36-1765	5569-04A2GS-T	4			50-36-1766	5569-04A2GS-210-T	4							
50-36-1775	5569-06A2GS-T	6			50-36-1776	5569-06A2GS-210-T	6							
50-36-1785	5569-08A2GS-T	8			50-36-1786	5569-08A2GS-210-T	8							
50-36-1795	5569-10A2GS-T	10			50-36-1796	5569-10A2GS-210-T	10							
50-36-1805	5569-12A2GS-T	12			50-36-1806	5569-12A2GS-210-T	12							
50-36-1815	5569-14A2GS-T	14			50-36-1816	5569-14A2GS-210-T	14							
50-36-1825	5569-16A2GS-T	16			50-36-1826	5569-16A2GS-210-T	16							
50-36-1835	5569-18A2GS-T	18			50-36-1836	5569-18A2GS-210-T	18							
50-36-1845	5569-20A2GS-T	20			50-36-1846	5569-20A2GS-210-T	20							
39-30-1221	5569-22A2GS-T	22			50-36-1856	5569-22A2GS-210-T	22							
50-36-1865	5569-24A2GS-T	24			50-36-1866	5569-24A2GS-210-T	24							
26-01-3177	5569-02AGS3-210-T	2	50 µ" SELECT GOLD SEE NOTE 2 OPTION "GS3"	94V-0	26-01-3101	5569-02A2GS-BL-T	2	30 µ" SELECT GOLD SEE NOTE 2 OPTION "GS"	BLACK 94V-2					
26-01-3178	5569-04AGS3-210-T	4			NOT TOOLED	5569-04A2GS-BL-T	4							
		6			NOT TOOLED	5569-06A2GS-BL-T	6							
		8			NOT TOOLED	5569-08A2GS-BL-T	8							
26-01-3094	5569-10AGS3-210-T	10			NOT TOOLED	5569-10A2GS-BL-T	10							
		12			NOT TOOLED	5569-12A2GS-BL-T	12							
		14			NOT TOOLED	5569-14A2GS-BL-T	14							
		16			26-01-3108	5569-16A2GS-BL-T	16							
		18			NOT TOOLED	5569-18A2GS-BL-T	18							
		20			NOT TOOLED	5569-20A2GS-BL-T	20							
		22			NOT TOOLED	5569-22A2GS-BL-T	22							
		24			NOT TOOLED	5569-24A2GS-BL-T	24							

THIS DRAWING CONTAINS INFORMATION THAT IS PROPRIETARY TO MOLEX ELECTRONIC TECHNOLOGIES, LLC AND SHOULD NOT BE USED WITHOUT WRITTEN PERMISSION

SYMBOLS: FA = 0; FC = 0; FD = 0; S = 0; ▼ = 0; C = 0; ☒ = 0; ■ = 0; G = 0

DIMENSION UNITS: IN/MM
SCALE: 1:1

GENERAL TOLERANCES (UNLESS SPECIFIED)

	MM	INCH
4 PLACES	±	±
3 PLACES	±	± 0.01
2 PLACES	± 0.25	± 0.015
1 PLACE	± 0.38	±
0 PLACES	±	±
ANGULAR TOL	± 0.5 °	

DRAFT WHERE APPLICABLE MUST REMAIN WITHIN DIMENSIONS

CURRENT REV DESC: MIGRATE TO ECTR

EC NO: 172489
DRWN: ANESSER 2018/01/26
CHK'D: JBELL 2018/02/20
APPR: FSMITH 2018/02/22

INITIAL REVISION:
DRWN: RJF 1988/02/16
APPR: FSMITH 2016/12/20

THIRD ANGLE PROJECTION | DRAWING: C-SIZE | SERIES: 5569

molex

MINI-FIT JR RIGHT ANGLE
HEADER ASSEMBLIES WITH MOUNTING PEGS

PRODUCT CUSTOMER DRAWING

DOCUMENT NUMBER	DOC TYPE	DOC PART	REVISION
55690002-SD	PSD	000	A

MATERIAL NUMBER	CUSTOMER	SHEET NUMBER
SEE CHART	GENERAL MARKET	4 OF 4

DOCUMENT STATUS	P1	RELEASE DATE	2018/02/22 21:31:14

THIS DRAWING REPLACES DRAWING SDA-5569-NA2*-*