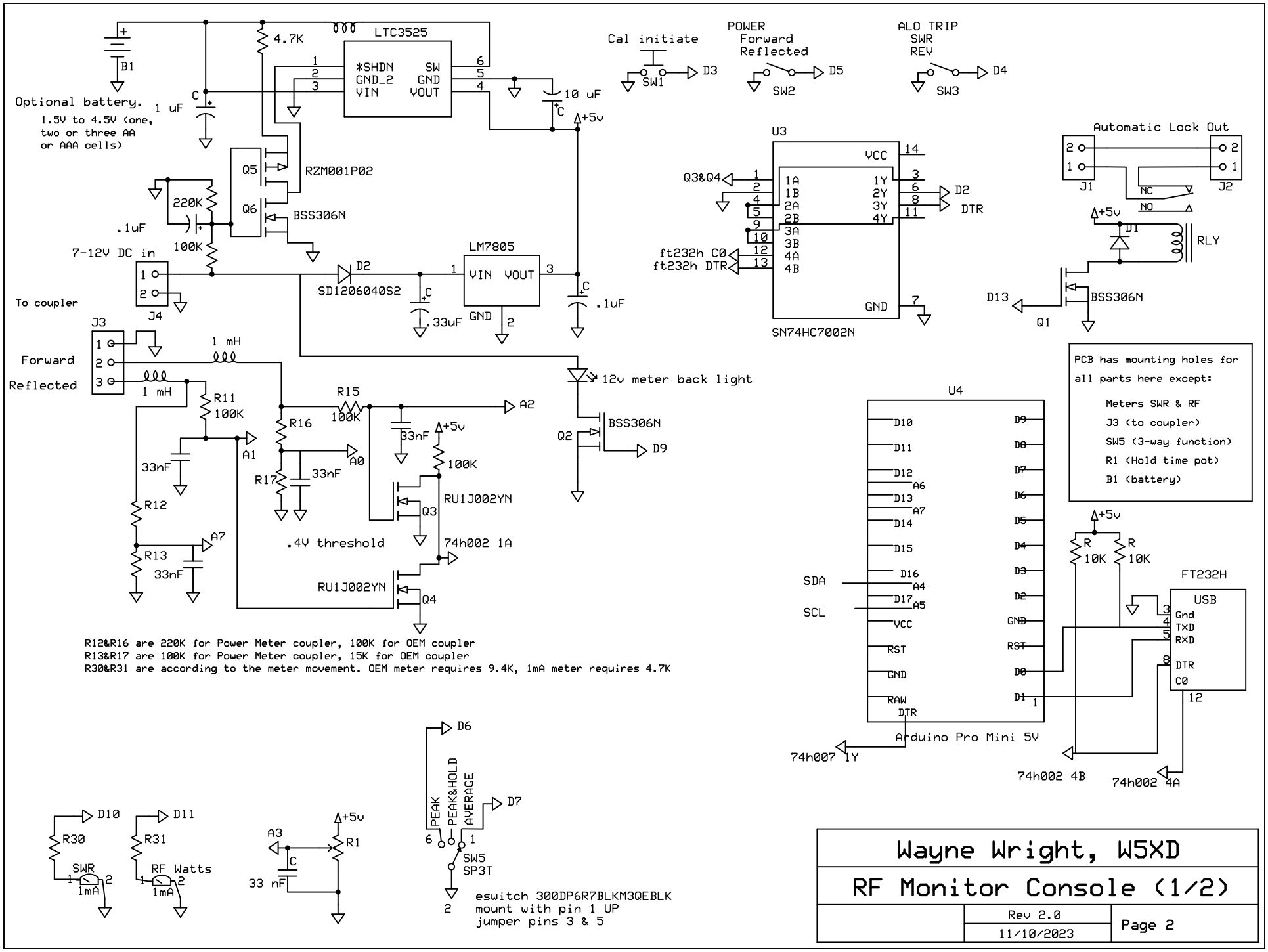

Wayne Wright, W5XD

RF Monitor Console (1/2)

Rev 2.0

11/10/2023

Page 2

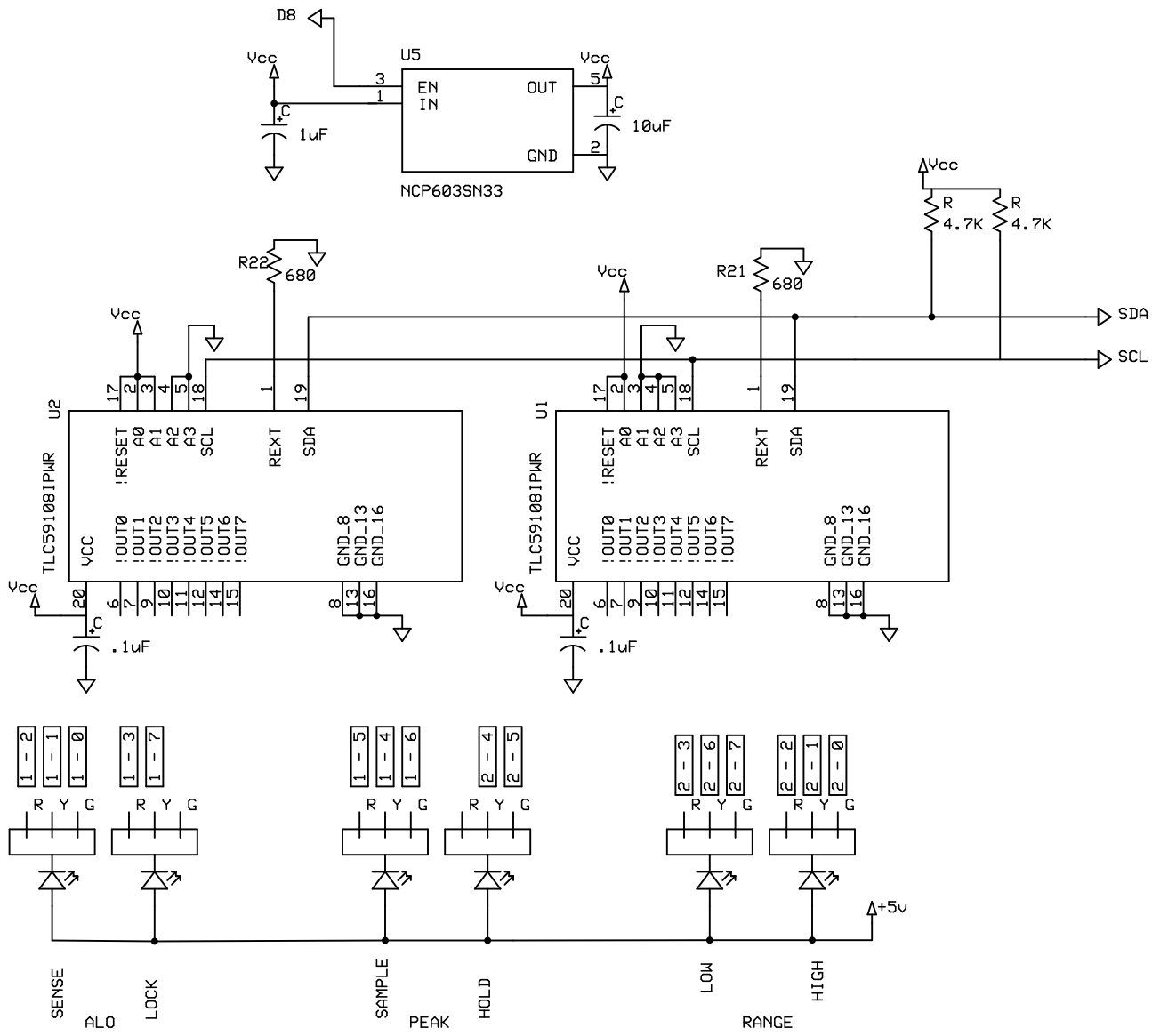

Wayne Wright, W5XD		
RF Monitor Console (2/2)		
	Rev 2.0 11/10/2023	Page 3