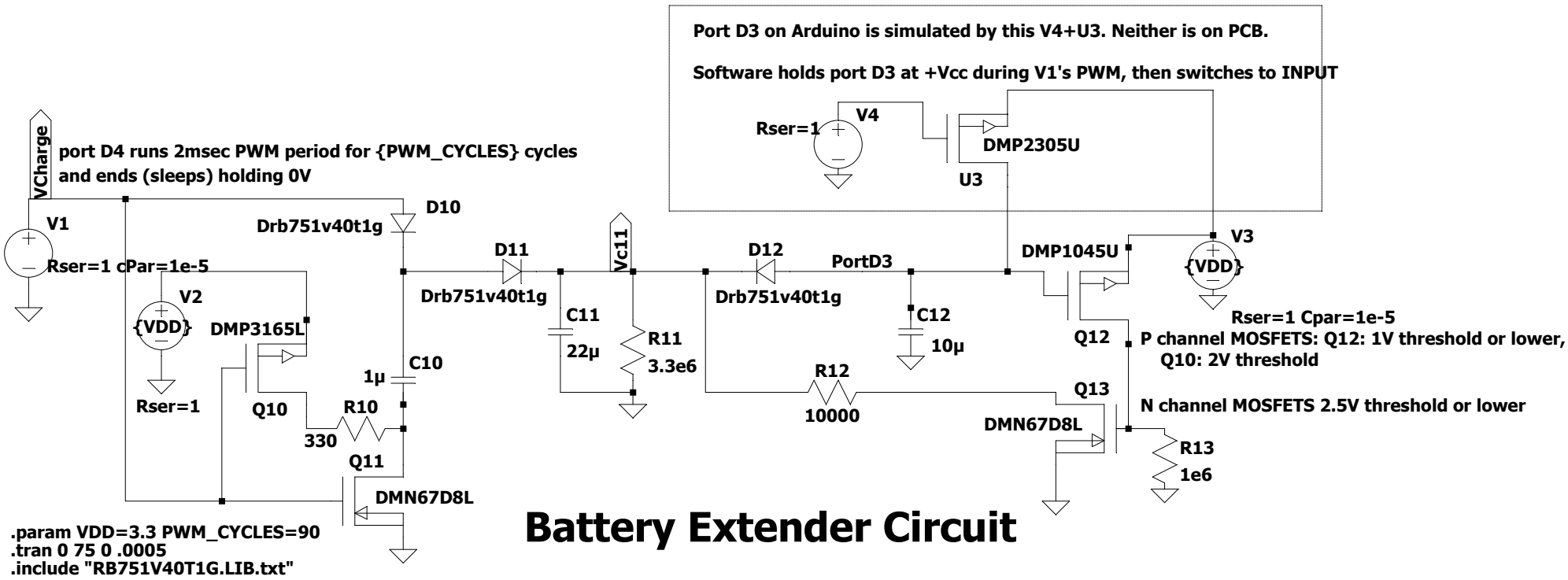

Battery Extender Circuit