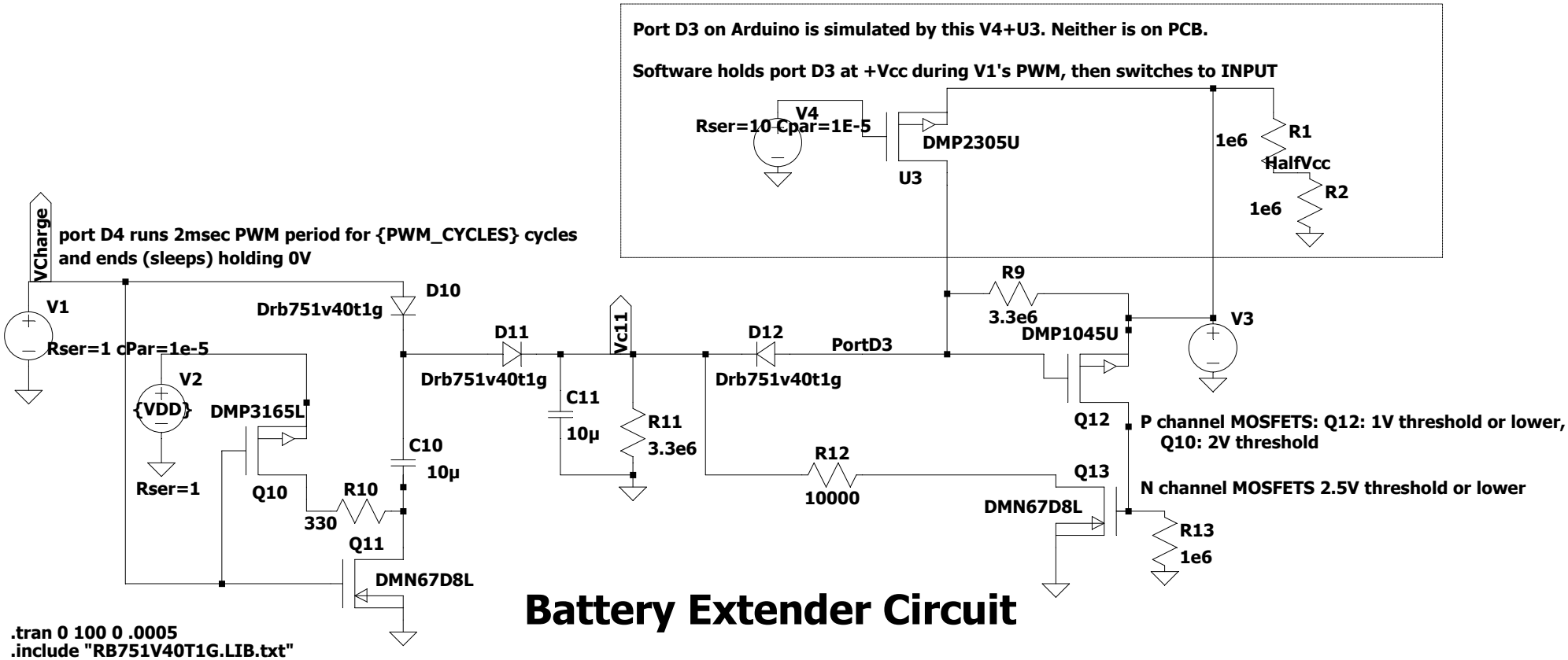

--- C:\dev\PacketThermometer\BatteryExtender.asc ---