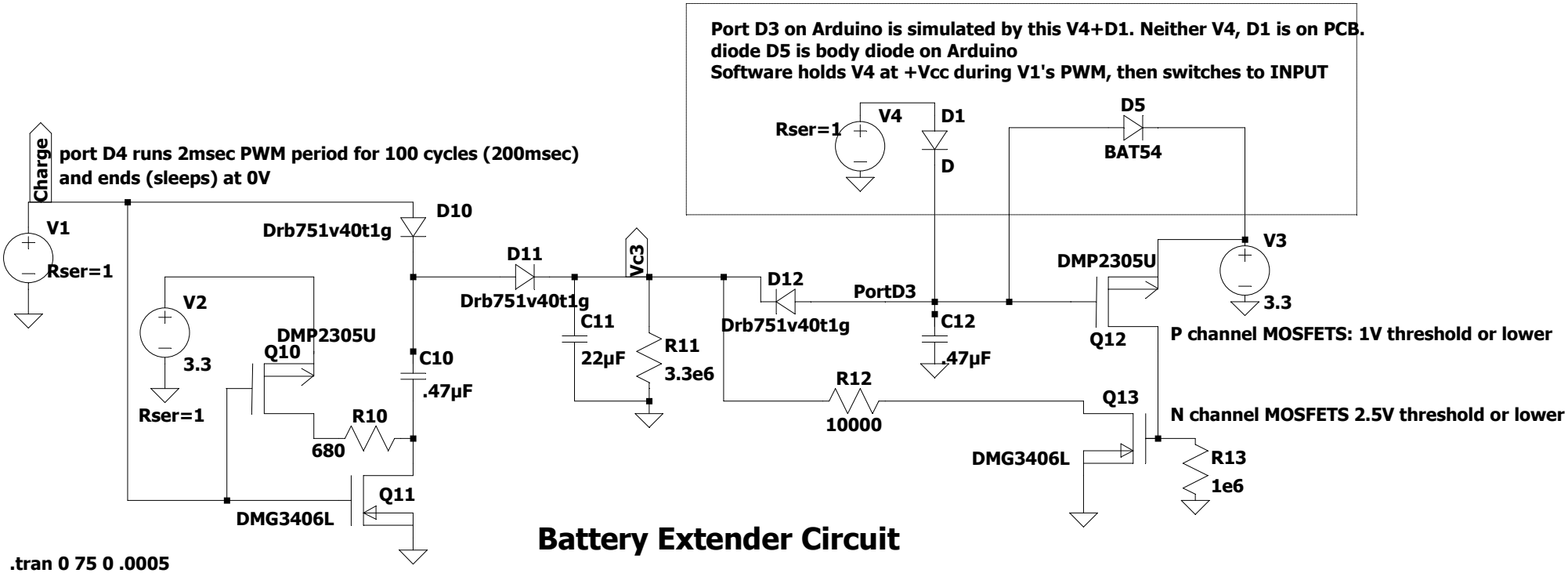

Battery Extender Circuit

.tran 0 75 0 .0005

.include "RB751V40T1G.LIB.txt"

--- C:\dev\WirelessThermometer\BatteryExtender.asc ---