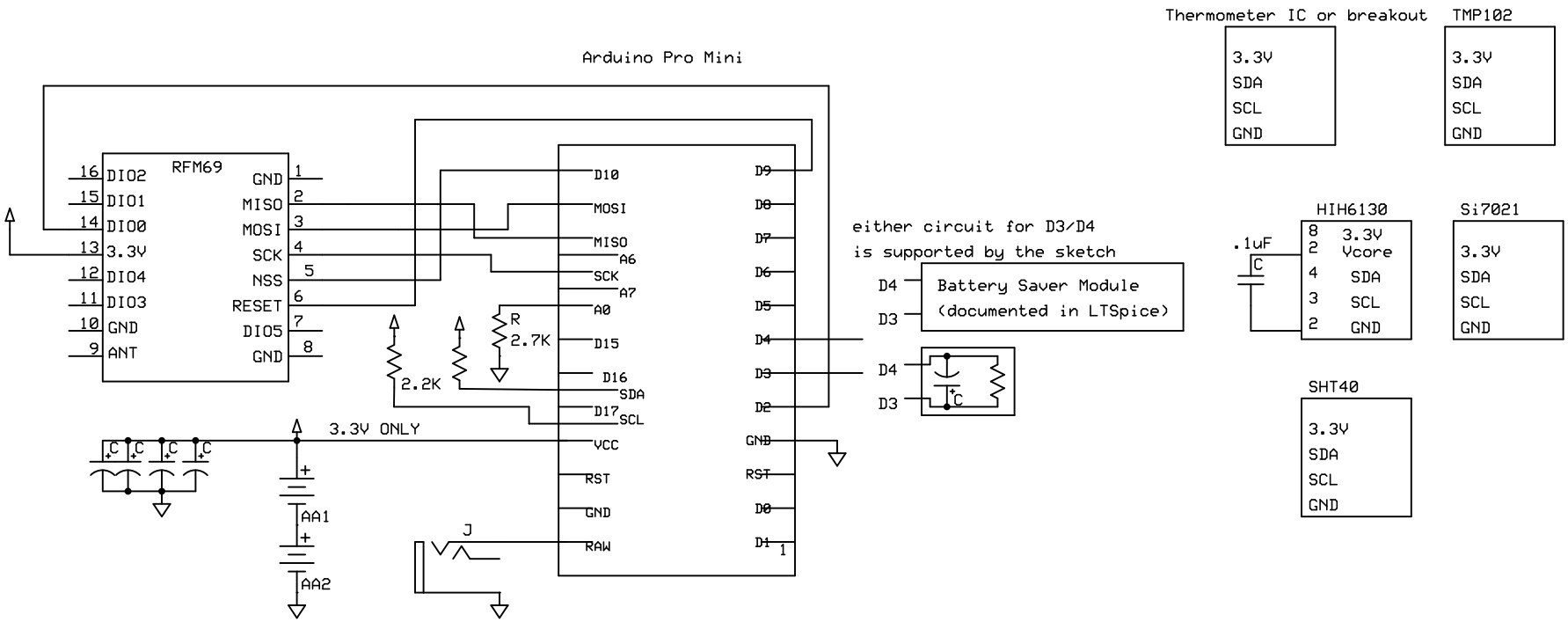

For battery operation:

1. Put an AA cell in each cell holder AND
2. Remove solder jumper SJ1 on the pro mini so the LED won't drain the cells

There are several 0.1" spacing I2C headers for various temperature sensors. And there are SMT pads for the HIH6130, Si7021 and the TMP102

Company Name		
Schematic Name		
Designer's name	Rev 8.0 06/01/2025	Page # or name