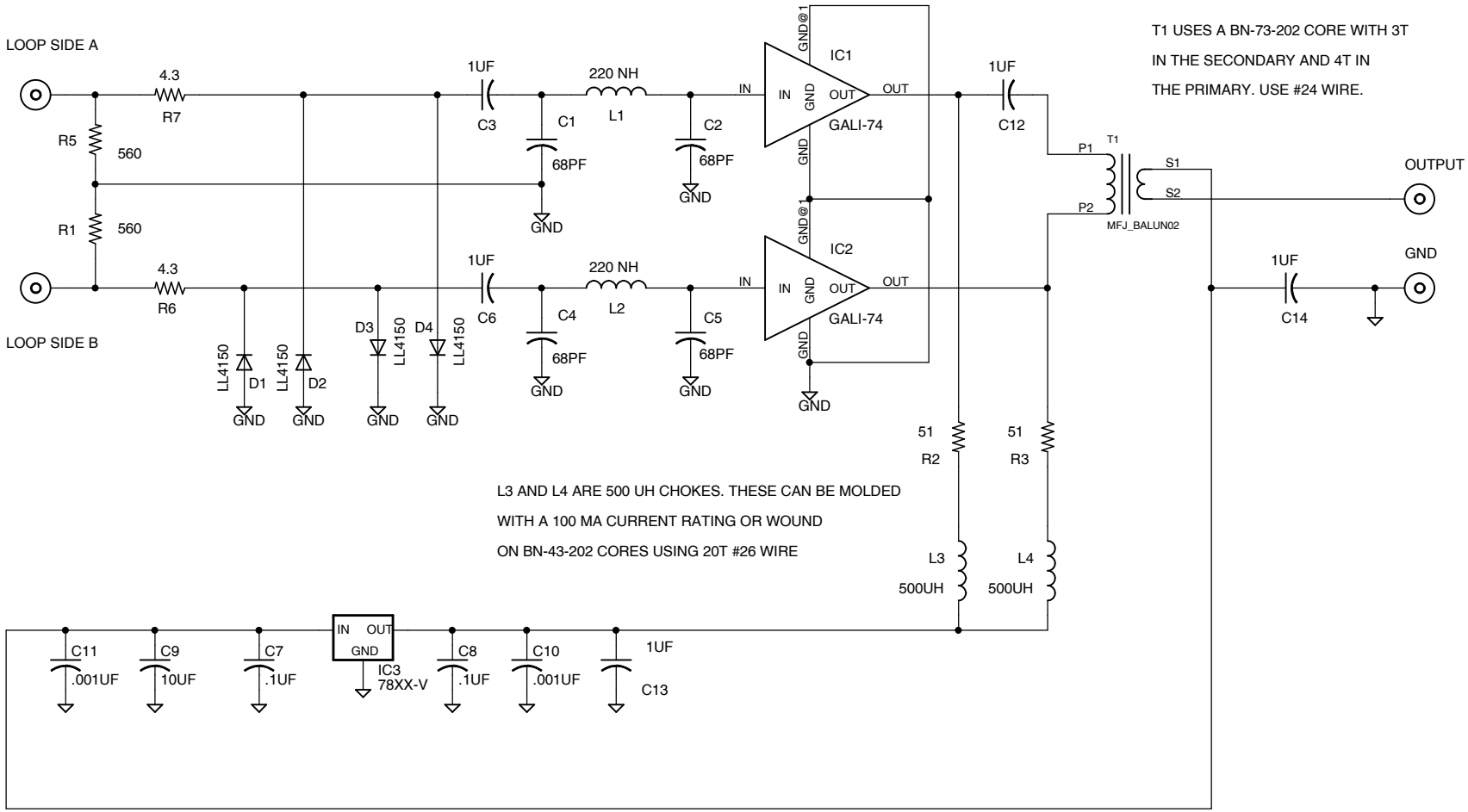

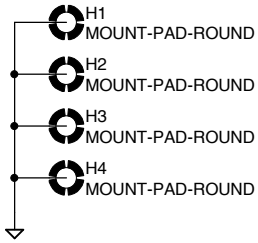

The Designing Cat
281 Garland Road West Newfield, Maine 04095

RX LOOP AMPLIFIER

GALI-74 BASED

File Name: RXLOOP_AMP

Document Number:

Rev: 03.2

Drawn: RLS | Checked: RLS

Date: 10/26/2016 8:45 PM | Sheet: 1/1

Proprietary Property of The Designing Cat LLC