**Northwestern University**
**Electrical Engineering**
Name: Peixin Zhang, Willie Liao
ID: JZH2008, GEL8580



# CE493: Advanced Low Power Digital and Mixed-signal Integrated Circuit Design Mid-term report

## 1 Topic: PVT Tracking Sensors

### Key Issue and Motivation

This project focuses on the design and implementation of an all-digital **PVT (Process, Voltage, and Temperature) tracking sensor** system that supports an adaptive clock distribution network.

The key challenge of this project is to accurately **detect the process, voltage, and temperature (PVT)** condition of the chip in real time.

Fluctuations in PVT parameters can significantly alter transistor delay and cause timing-margin loss, especially under high-frequency voltage droops.

### Key Advantage

An adaptive clocking system that can **adjust its operation dynamically based on PVT conditions**– **particularly to compensate for high-frequency supply voltage droops**– can improve performance and energy efficiency while ensuring safe timing operation.

### Key Solution Concept

Implement a **PVT-tracking sensor**, either digital or analog, that provides high-fidelity tracking of PVT-induced delay variations. In this project, we focus on an **all-digital approach** using:

- **Replica-path–based delay sensing** (Dynamic Variation Monitor, DVM)
- **Clock–data delay compensation** through a tunable-length delay chain

The sensor aims to monitor **voltage droops and timing margin variations** in real time, providing feedback to **dynamically control the clock gating** mechanism.

The design concept is inspired by the 22 nm adaptive clock distribution test chip proposed by Bowman *et al.*, IEEE JSSC 2013 [1].

## 2 Background and Related Work

High-frequency voltage droops (tens to hundreds of MHz) can cause timing margin loss and performance degradation in processors. Prior approaches such as DVFS, analog PLL modulation, and Razor-style timing recovery have limitations in response speed or design complexity. The work by Bowman *et al.* introduced an *all-digital, dynamically adaptive clock distribution* that combines:

- Tunable-length delay chain for preventing path timing-margin degradation for multiple cycles
- Dynamic Variation Monitor (DVM) as an on-die voltage tracking sensor
- Clock gating to prevent timing errors during droops

Our project will build a simplified RTL version to verify these concepts digitally.

# 3 Design Architecture

The proposed test system integrates the following functional blocks:

- **ClockGen:** Fixed-frequency clock generator (emulating PLL output)
- **Tunable-Length Delay:** Configurable buffer chain to adjust clock delay and simulate voltage sensitivity
- **DVM (Dynamic Variation Monitor):** Sensor that detects Vcc droop onset and triggering adaptive clock gating
- **ClockGate:** Clock-gating circuit controlled by the DVM output to remove clock edges that would otherwise degrade path timing margin
- **Pipeline3Stage:** Three-stage logic pipeline with LFSR input/output for data stimulation and verification
- **(Optional) NoiseInjector:** Module to emulate supply voltage droop during simulation

Figure 1 illustrates the overall concept of the system.

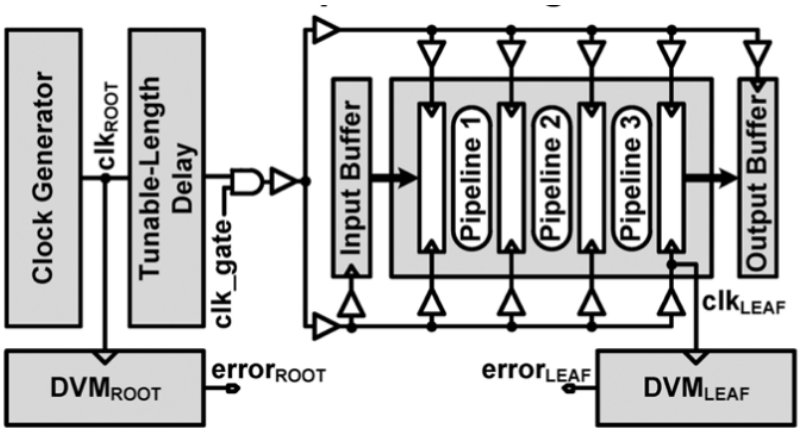


(a) Test-chip block diagram

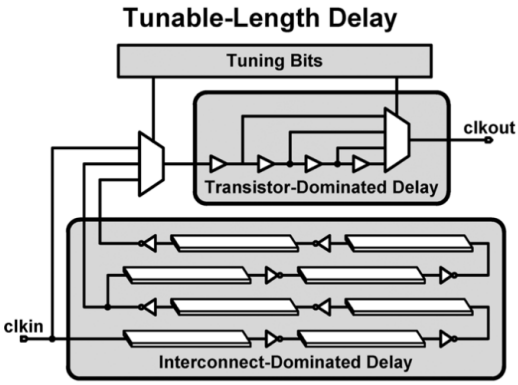


(b) Tunable-length delay

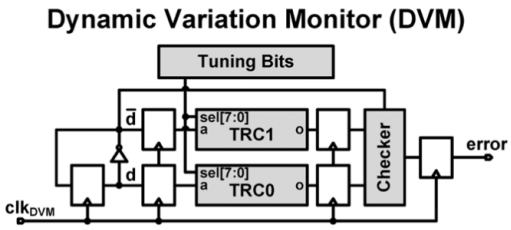


(c) Dynamic Variation Monitor (DVM)

Figure 1: Three subfigures from Fig. 2 of [1]: the adaptive clock distribution architecture, tunable delay, and DVM.

Figure 2 illustrates a possible TRC implementation in the DMV components.

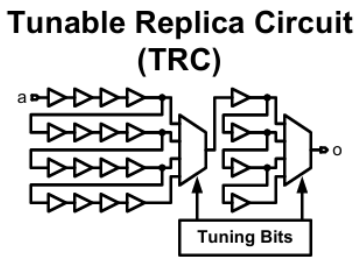


Figure 2: One subfigure from Fig. 2 of [2]: one way to implement TRC

# 4 RTL Implementation Plan

The RTL will be written in Verilog and verified with Xcelium (xrun) for functional simulation.

The synthesis will be performed using Cadence Genus with a standard-cell library (.lib), followed by Innovus for physical design and timing closure. **Implementation stages:**

1. Stage 1: Build and simulate the 3-stage pipeline with LFSR input/output.
2. Stage 2: Integrate the tunable delay and verify clock phase adjustment.
3. Stage 3: Add DVM and clock gating to achieve droop-tolerant behavior.
4. Stage 4: Prepare .sdc constraints and synthesize using Genus.
5. Stage 5: Place & Route with Innovus and simulate Vcc Droop effects

# 5 Current Progress

## 5.1 Three Stage Pipeline Processor

The LFSR continuously provides random input data to the three-stage processor. Each stage of the processsor contains 32 independent logic paths. In this design, the paths include INV chains, NAND chains, NOR chains, XOR chains, NAND-NOR chains, MUX-INV chains, and MUX-INV-NOR-XOR chains, spanning various lengths and drive strengths.

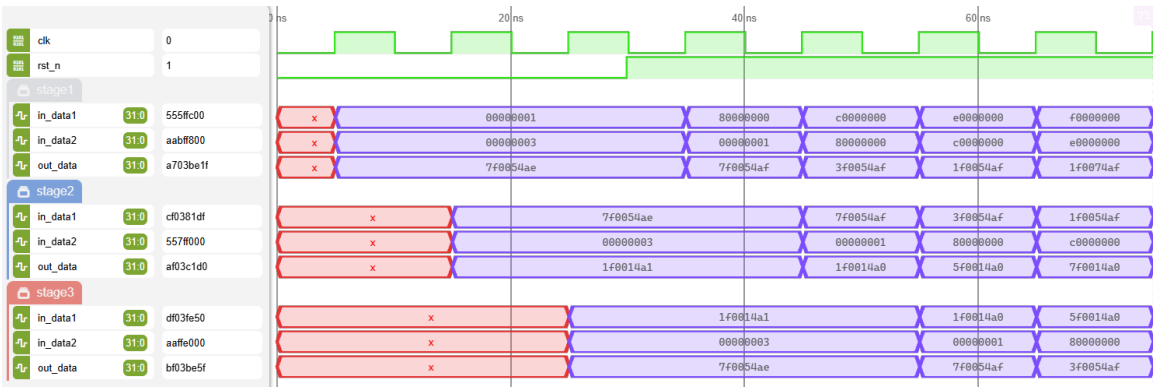


Figure 3: Power-on timing diagram of the processor

Except INV chains, other paths have multiple input ports. To prevent any single bit of the 32-bit LFSR from driving excessive fan-out, two 32-bit LFSRs are used in this design–one provides the input for the main propagation chain, while the other supplies input signals for the additional multi-input ports. Figure 2 shows the data propagation waveform of the three-stage pipeline after power-on, verifying the functional correctness of the pipeline.

## 5.2 Tunable Length Delay

*"The tunable-length delay, consisting of scan-programmable transistor and interconnect delay components, prolongs the path clock-data delay compensation during a VCC droop . . . The tunable-length delay prevents path timing-margin degradation for multiple cycles after the VCC droop occurs to enable a sufficient response time for dynamic adaptation."*
(Section III, left column, [1])

*". . . From Figs. 4, 5, and the simulations in Figs. 5–7, path clock-data delay compensation occurs for the duration of the clock distribution delay . . . With FCLK of 1.0 GHz, the clock-data compensation occurs for 2 cycles, 4 cycles, and 8 cycles for the clock distribution delays of 2 ns, 4 ns, and 8 ns, respectively."*
(Section IV, p. 912, right column, [1])

The implemented *tunable-length delay* structure follows the design principle described in the reference work, where a combination of **transistor-dominated and interconnect-dominated paths** provides adjustable clock distribution delays. The measured post-synthesis timing results in Figure 4 show that the transistor delay stages achieve approximately **2 ns** and **8 ns** of delay, corresponding to the medium and long transistor-dominated configurations in the reference design.

```
[20000] select cand0
[20000 ns] >>> select = clk_in       sel=00001
[25000 ns] clk_in ↑   sel=00001
[25200 ns] clk_out ↑  sel=00001  SKEW = 200.00 ps
[46000] select t_tap[4]
[51000 ns] clk_in ↑   sel=00010
[53000 ns] clk_out ↑  sel=00010  SKEW = 2000.00 ps
[70000 ns] >>> select = t_tap[4]     sel=00010
[72000] select t_tap[8/12]
[77000 ns] clk_in ↑   sel=00100
[85000 ns] clk_out ↑  sel=00100  SKEW = 8000.00 ps
[98000] select w_tap_b
[103000 ns] clk_in ↑   sel=01000
[104000 ns] clk_out ↑  sel=01000  SKEW = 1000.00 ps
[120000 ns] >>> select = t_tap[12]    sel=00100
[124000] select w_tap_c
[129000 ns] clk_in ↑   sel=10000
[130400 ns] clk_out ↑  sel=10000  SKEW = 1400.00 ps
Simulation complete via $finish(1) at time 150 NS + 0
```

Figure 4: Measured post-synthesis skew of different tunable-delay configurations.

To further align with the paper's four delay configurations, the **4 ns mode** will be realized through an **interconnect-dominated** path during physical design in Innovus. The objective is to make this configuration primarily sensitive to interconnect RC delay rather than transistor switching delay, enabling distinct $V_{CC}$-to-delay characteristics among the four modes.

The key idea for implementing the interconnect-dominated delay in Innovus is to:

- Physically separate the `u_in` and `u_out` buffers to a large spatial distance.
- Route the connecting net on lower metal layers with higher resistance and capacitance.

In this work, the clock skew (*SKEW*) is defined as the temporal difference between the rising edge of the input clock (`clk_in`) and the corresponding rising edge of the delayed output clock (`clk_out`) after passing through the tunable-delay path. Mathematically, it can be expressed as:

$$\text{SKEW} = t^{(+)}_{\text{clk_out}} - t^{(+)}_{\text{clk_in}}$$

where $t^{(+)}_{\text{clk_in}}$ and $t^{(+)}_{\text{clk_out}}$ denote the timestamps (in nanoseconds) of the positive-edge transitions of `clk_in` and `clk_out`, respectively.

# 6 Future Schedule

## 6.1 Dynamic Variation Monitor

Both the ROOT and LEAF clock nodes will incorporate a DVM to detect timing-margin reduction under supply droops. Each DVM consists of a replica critical-path delay line, two transition replica chains (TRCs) in Figure 2 for rise and fall edges, and a comparator that checks the captured delay against a programmable threshold. When the replica delay exceeds the threshold, the DVM asserts a `droop_detect` pulse indicating a $V_{CC}$ droop event.

The DVM output passes through a **two-stage synchronizer** before being used by the adaptive clock control logic. The $\mathrm{DVM}_{\mathrm{ROOT}}$ triggers the clock-gating signal when droop is detected, while the $\mathrm{DVM}_{\mathrm{LEAF}}$ provides timing-margin telemetry for monitoring and calibration.

## 6.2 Adaptive Clock Control Logic

The adaptive clock control logic integrates the **clock-gating unit** and the **glitch-safe clock switch**. A glitch-free integrated clock gate (ICG) is driven by the `droop_detect` signal from $\mathrm{DVM}_{\mathrm{ROOT}}$ to pause the processor clock for a number of cycles, ensuring that no clock edge violates leaf timing during a droop event.

During this gated interval, a glitch-safe two-input multiplexer switches the clock source from `clk_in` to the delayed path `clk_delay`, and back after recovery. The clock select signal is fully synchronized to the clock domain and held stable during the gated period.

## 6.3 Noise Injector

To emulate $V_{CC}$ droops during validation, we will integrate an on-chip toggling load (pseudo-random activity via LFSR) gated by a test enable; its strength and burst length are programmable to sweep droop magnitude/frequency.

## 6.4 Integration in Physical Design Flow

At the current stage, the tunable-delay, DVM, clock-gate, and glitch-safe switch logic will be integrated around the processor clock root within the Innovus physical design flow:

$$\texttt{clk_in} \rightarrow \mathrm{ICG} \rightarrow \text{glitch-safe MUX}(\texttt{clk_in}, \texttt{clk_delay}) \rightarrow \texttt{clk_core}.$$

The focus will be on placing and routing these modules with realistic parasitic extraction to evaluate post-layout timing and delay sensitivity. The DVM and clock-control blocks will be floorplanned close to the clock root to minimize insertion delay and maintain timing correlation with the tunable-delay path.

All configuration signals such as tuning bits and DVM thresholds will be statically defined at synthesis time.

# 7 Expected Performance and Metrics

- **Cycle Offset:** Measure how many clock cycles of delay compensation are achieved after a simulated droop.
- **Detection Latency:** DVM response time (target: $\leq$2 cycles).
- **Clock Gating Efficiency:** Percentage of error-prevented cycles.
- **Area/Power Overhead:** Estimated from Genus/Innovus reports.

Table 1: Design Objectives and Evaluation Checklist

| **Design Target** | **Description / Metric** | **Achieved?** |
|---|---|---|
| Low cost | Small area and low dynamic power overhead ($< 3\%$) | |
| Accurate tracking under PVT variation | Replica delay closely follows real critical-path delay (error $< 5\%$) | |
| Fast response | DVM detects droop and responds within one clock cycle ($\leq 2$ cycles total) | |
| Accurate sensing result | For digital: precise timing margin detection; for analog: accurate temperature / voltage output | |
| Integration with adaptive clock control | Verified system-level operation of DVM + ClockGate under simulated droop conditions | |

# 8 Problems

- **How to implement programmable noise injector circuit to generate Vcc droop for emulation?**
  A programmable on-chip noise injector can be modeled using **controllable current pulses or switched capacitive loads on the VCC rail?** to emulate voltage droops. For simulation, equivalent delay perturbation on the replica path can approximate its effect.

- **In practice, the clock gating circuit should be off-die, but the design should model it to validate the functional correctness. Considering the process of Vcc droop will result in multiple timing errors in $DVM_{ROOT}$, the clock gate should remove clock edges for a fixed or adaptive number of cycles.**
  Although real systems place the clock-gating controller off-die, an on-chip behavioral model is necessary to validate functional response under droop. The gate should suppress a fixed or adaptive number of clock edges upon $DVM_{ROOT}$ assertion.

- **After synthesis stage completed, may it be necessary to perform a Vcc droop test. (The timing at this point is not yet accurate)**
  Accurate timing correlation requires post-layout extraction (Innovus) before performing realistic VCC sensitivity analysis.

# 9 Conclusion / Next Steps

By midterm, we aim to complete RTL design and functional simulation of the adaptive clock test system. The next steps include synthesis, layout, and performance evaluation under simulated droop conditions. This work will demonstrate a fully digital method for real-time PVT tracking and adaptive timing control.

# References


[1] K. A. Bowman, C. Tokunaga, T. Karnik, V. K. De, and J. W. Tschanz, "A 22 nm all-digital dynamically adaptive clock distribution for supply voltage droop tolerance," *IEEE Journal of Solid-State Circuits*, vol. 48, no. 4, pp. 907–916, 2013. DOI: 10.1109/JSSC.2013.2237972. [Online]. Available: https://ieeexplore.ieee.org/document/6415402.

[2] K. Bowman et al., "Dynamic variation monitor for measuring the impact of voltage droops on microprocessor clock frequency," in *IEEE Custom Integrated Circuits Conference 2010*, 2010, pp. 1–4. DOI: 10.1109/CICC.2010.5617415.