Arduino Nano Controller	Block Diagram	4/12/21

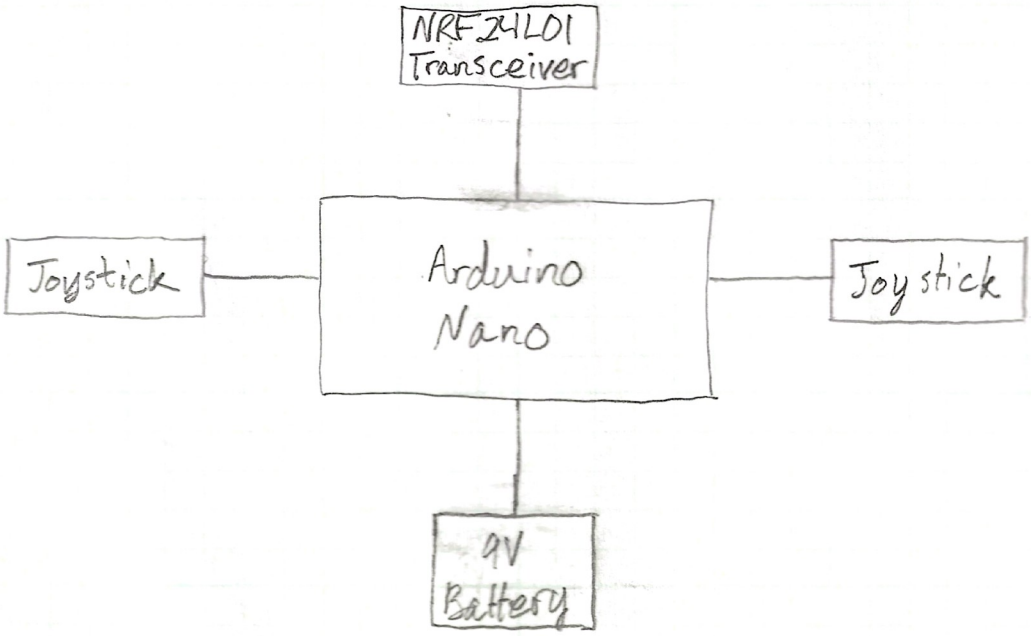

Arduino Uno Tank | Block Diagram | 4/12/21

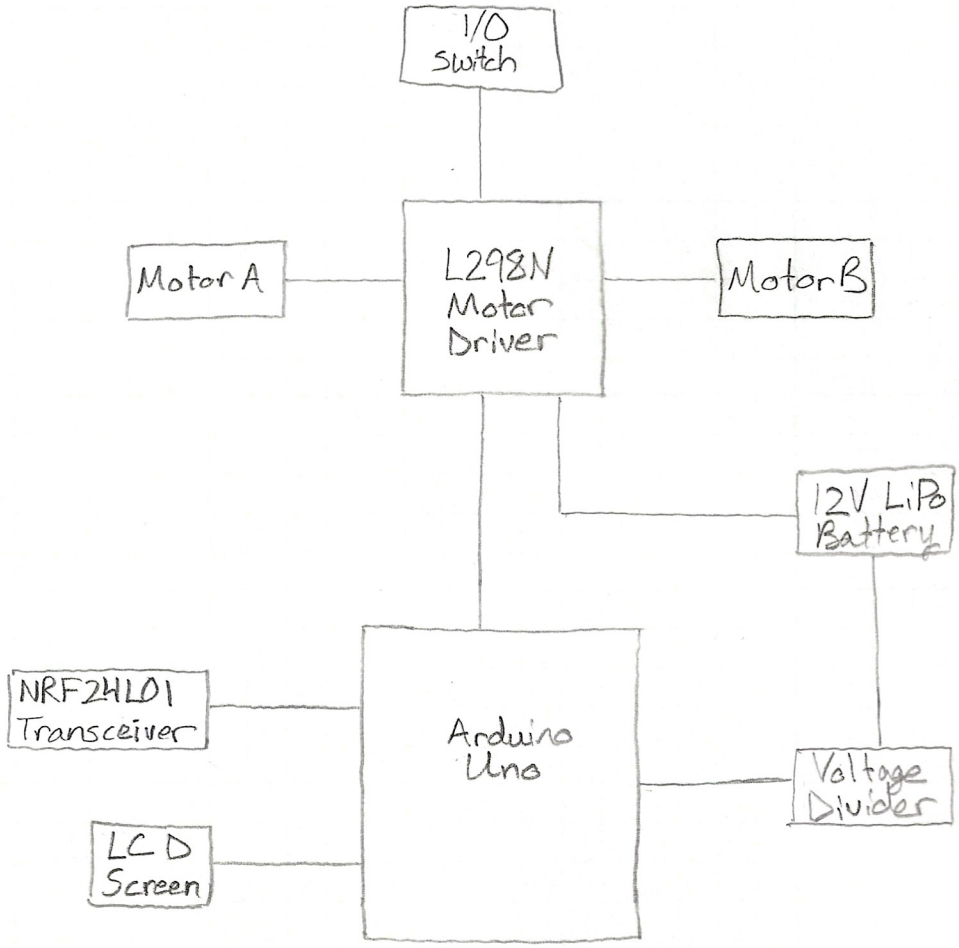

Arduino Nano Controller | Circuit Diagram | 4/12/21

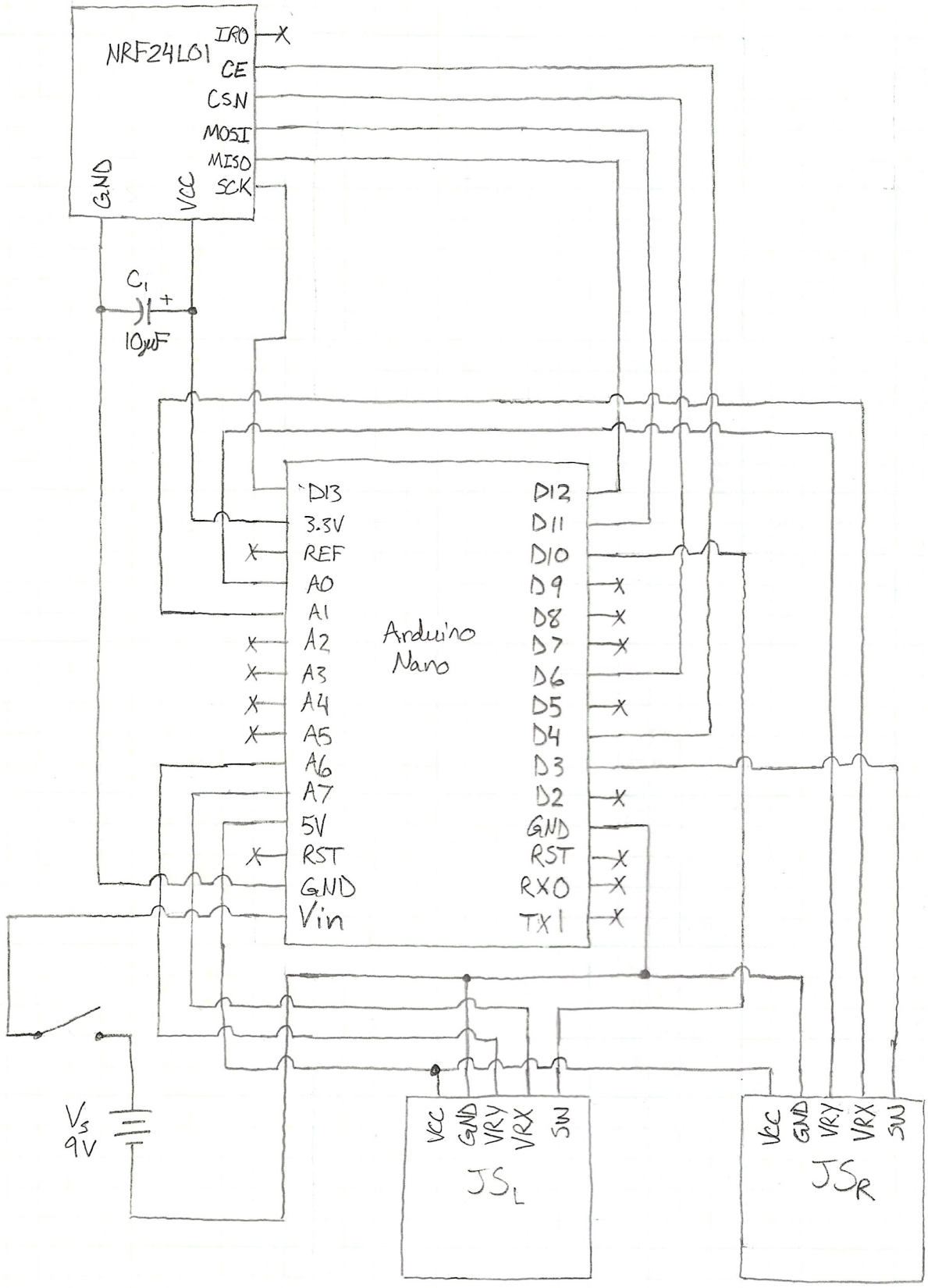
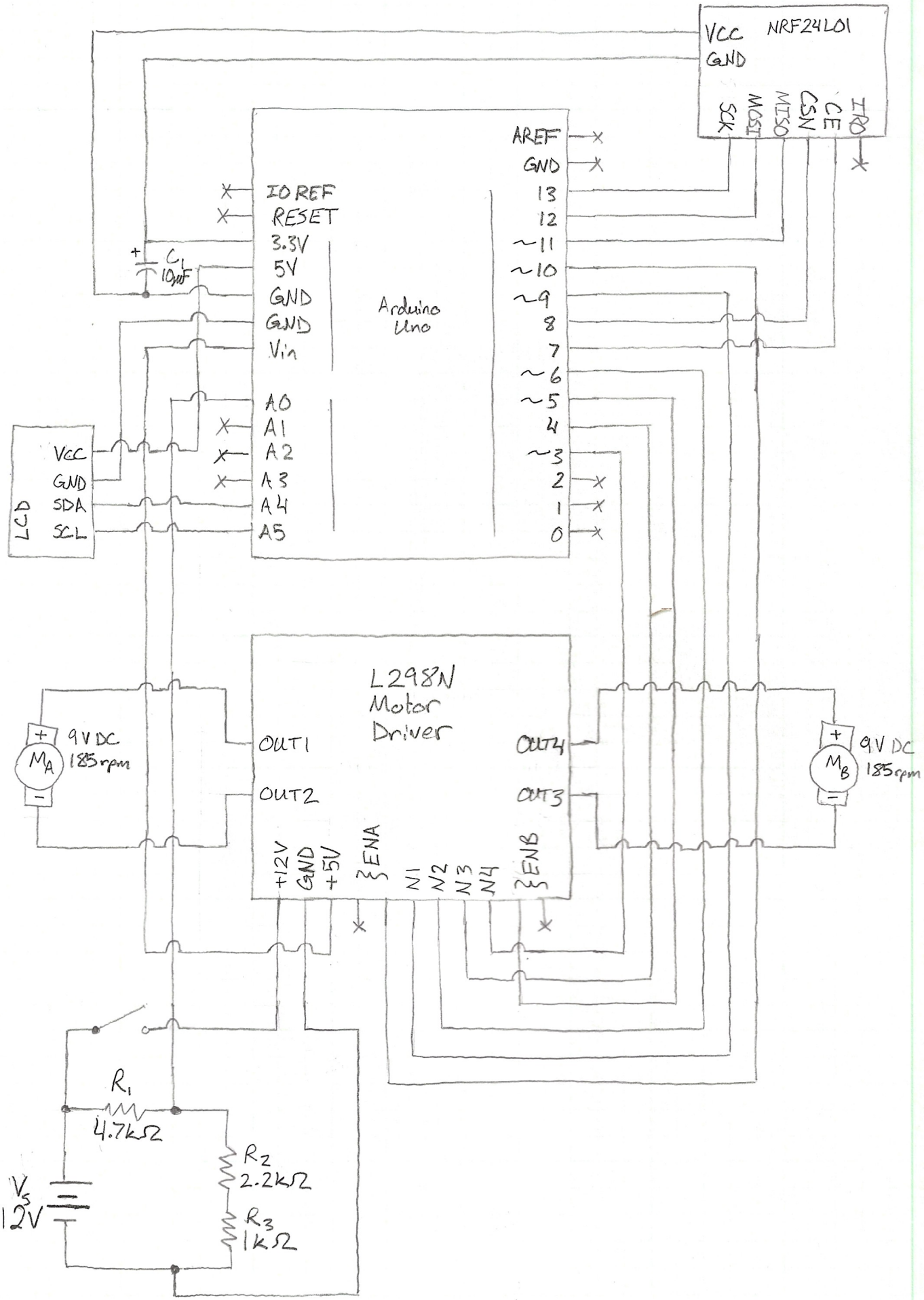
Arduino Uno Tank | Circuit Diagram | 4/12/21