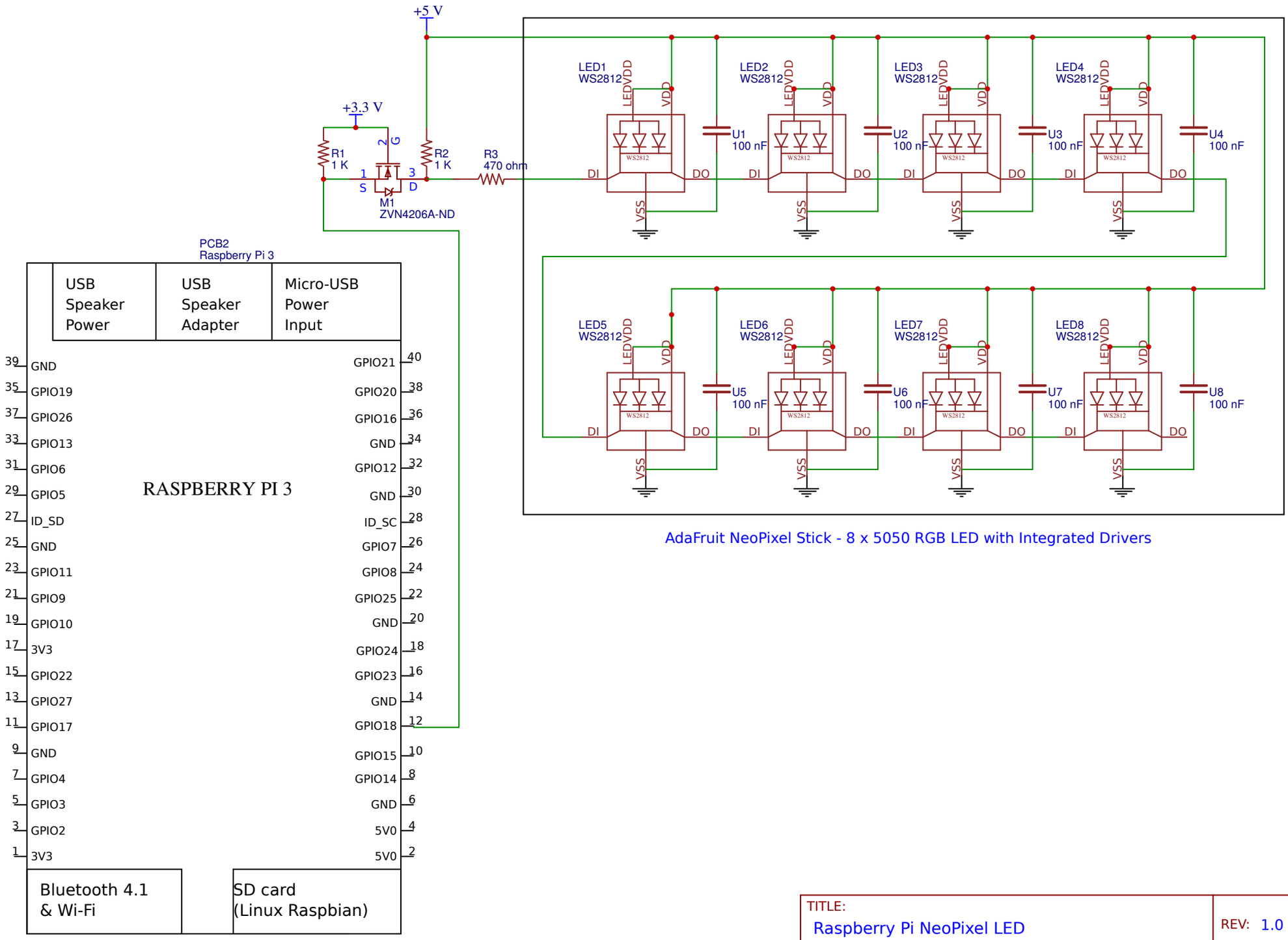

AdaFruit NeoPixel Stick - 8 x 5050 RGB LED with Integrated Drivers

TITLE: Raspberry Pi NeoPixel LED	REV: 1.0
Date: 2017-10-31	Sheet: 1/1
EasyEDA V4.10.3	Drawn By: David Wachenschwanz