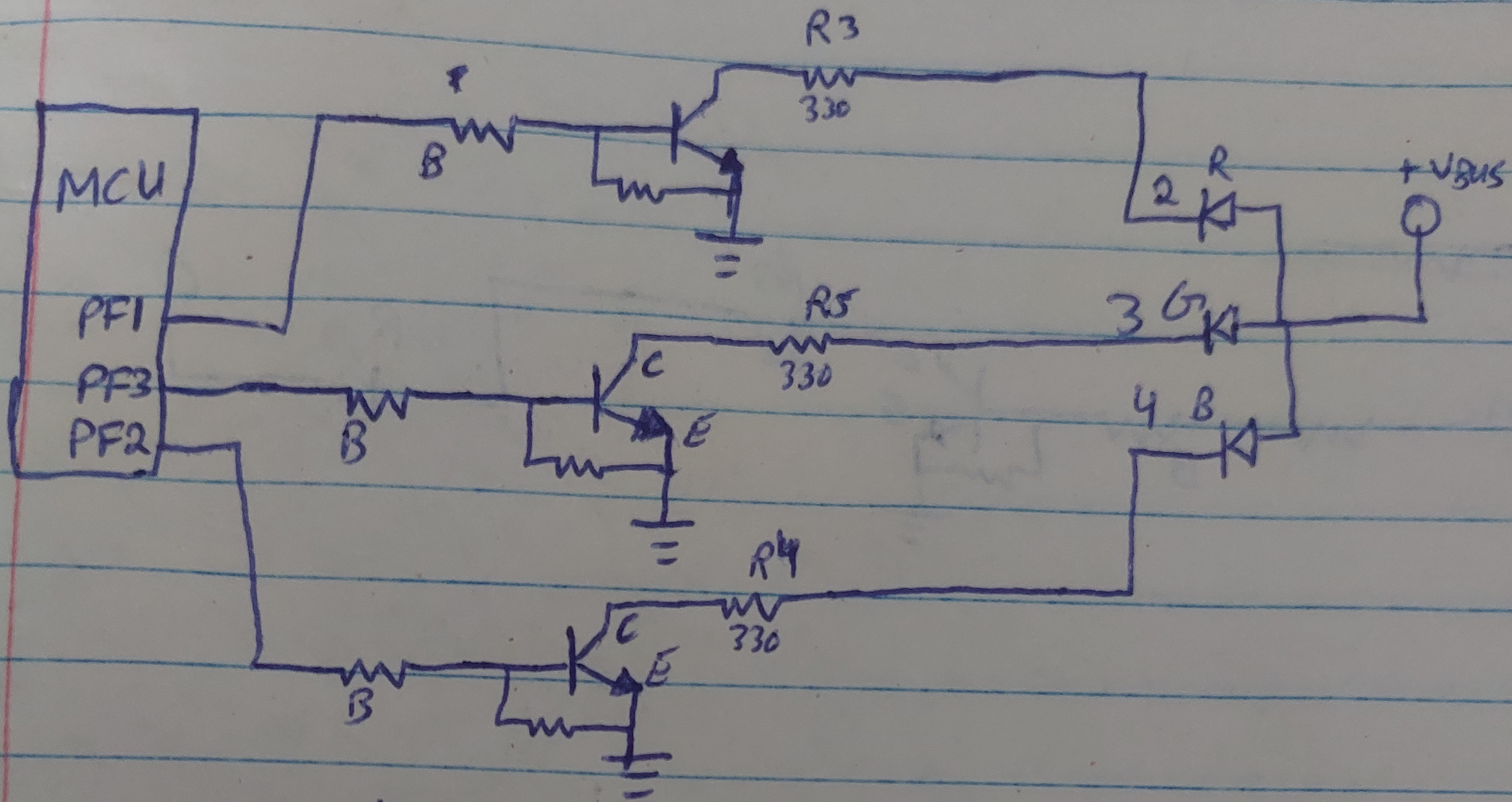

LED TO MCU Schematic

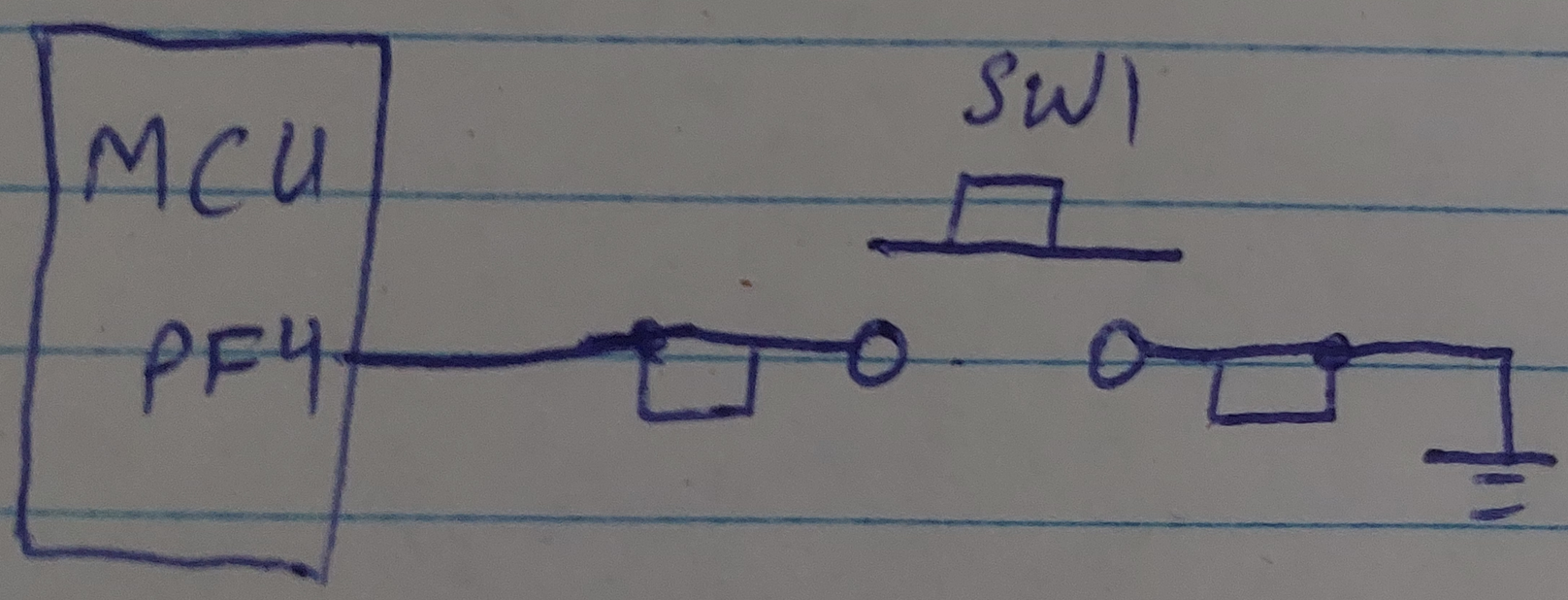

MCU to SW1 shematic

iv)

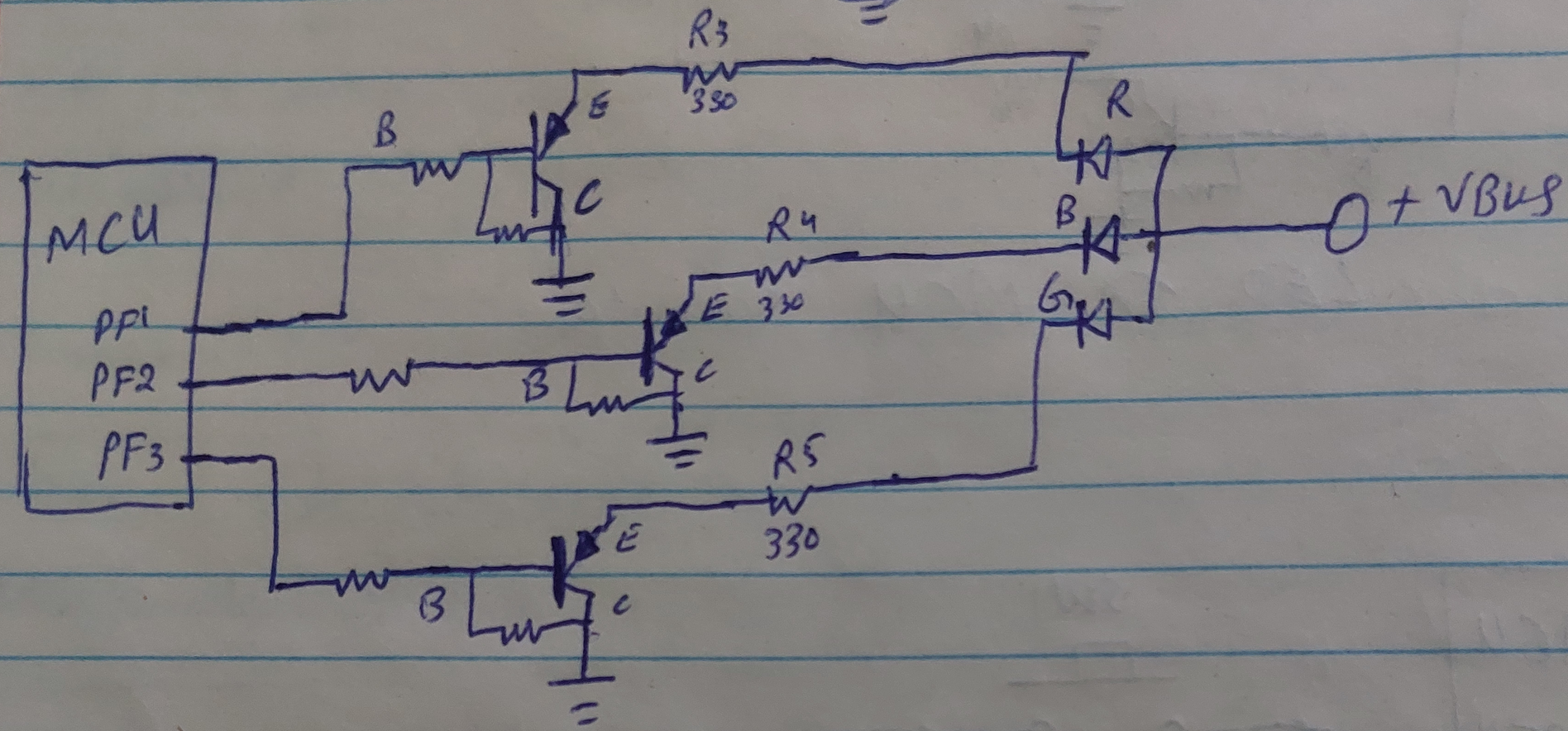

Negative Logic LED Circuit Made using PNP BJT Instead of NPN BJT