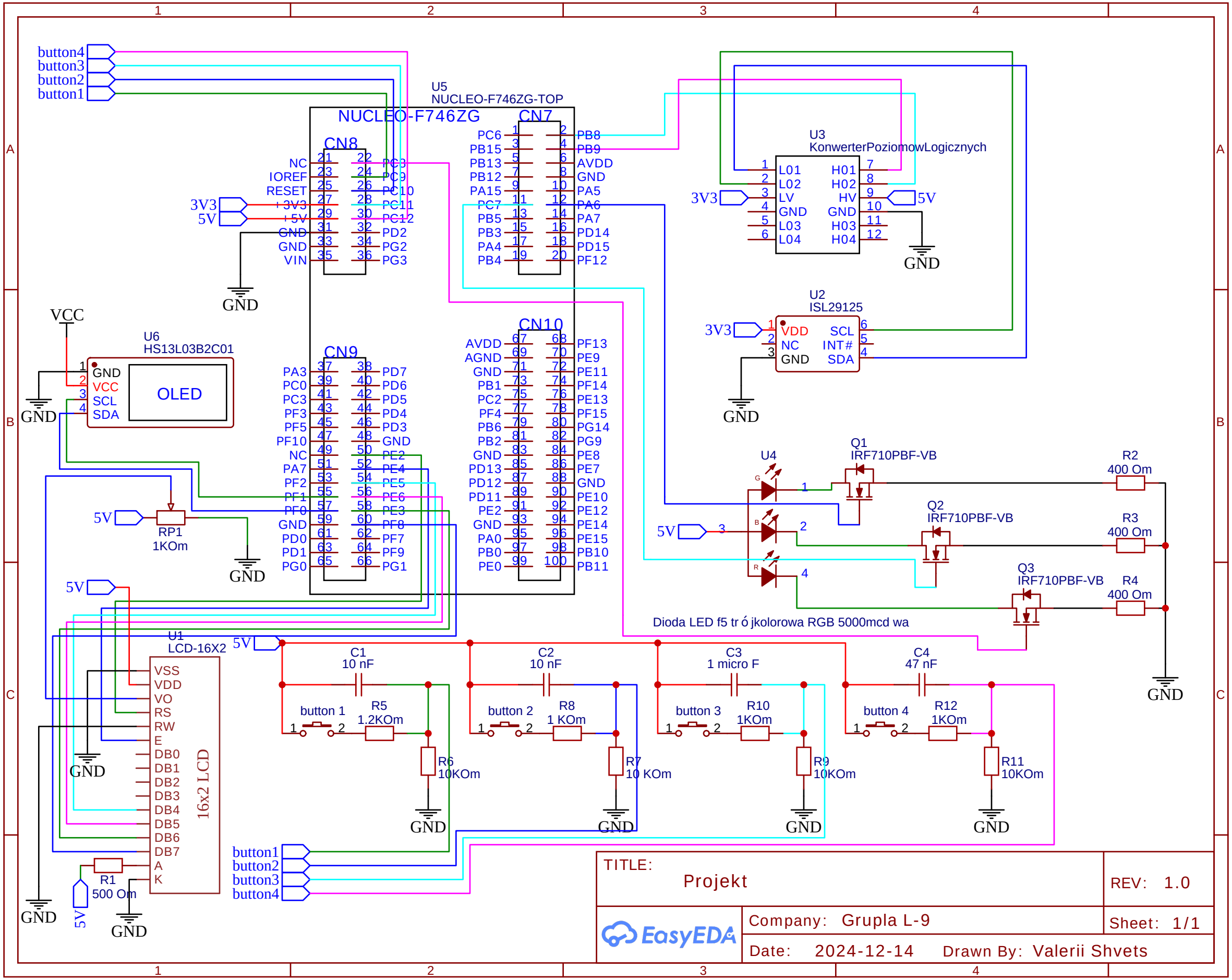

TITLE: Projekt

REV: 1.0

Company: Grupla L-9

Sheet: 1/1

Date: 2024-12-14

Drawn By: Valerii Shvets