WALID KATENDE

MECHANICAL ENGINEERING FROM ONDOKUZ MAYIS UNIVERSITY

walidkats@gmail.com
linkedin.com/in/katendewalid
(90) 553 - 835 31 52

UNIVERSAL BOGIE PRESS DESIGN

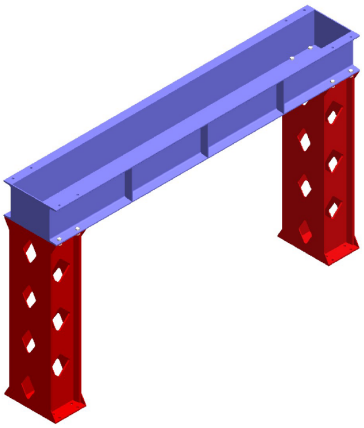

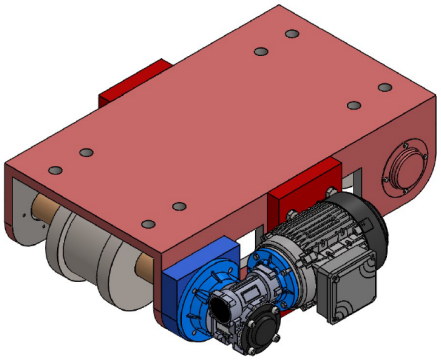

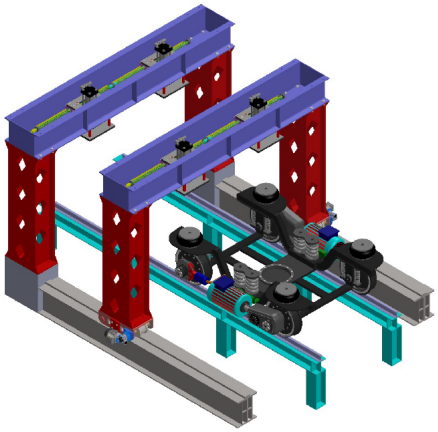

What?

- Design of an automatic universal machine that can balance **all load points (2 or 4)** of any bogie type simultaneously
- Capable to provide the necessary force to simulate the **Tram weight** in operation,

How?

- Made **Engineering calculations** to fit the structural, weight capacity and dimensional considerations.
- Designed a **3D model** in SolidWorks and used **Simulation feature** to run the necessary analyses.
- Used Drawings feature to produce detailed **technical drawings** for all components of the machine,

Results

- Integrating hand calculations and **CAD software** analysis resulted in a bogie test capacity of 80kN and an overall machine **safety factor** of 3.0.
- Can move in both the x and y axes to tests all bogie joints simultaneously,

TAPE CASTING MACHINE (TCM) DESIGN

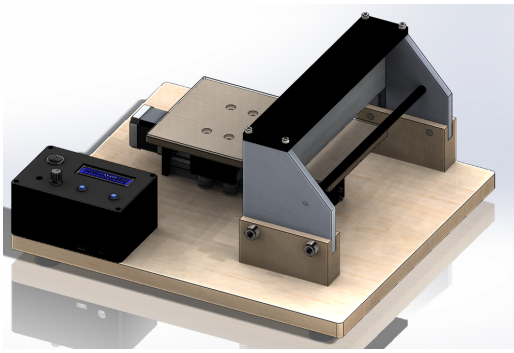

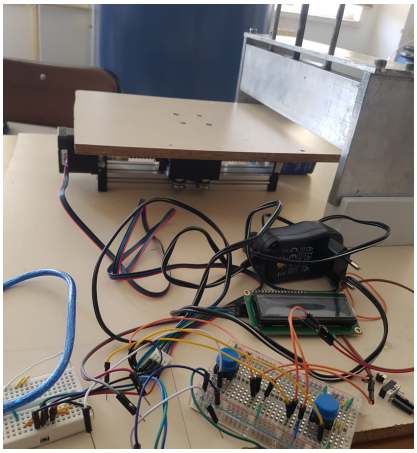

What?

- Design of a Tape Casting machine with an adjustable speed of 1 cm/s.

How?

- Designed in **SolidWorks**
- Used **Arduino Uno** as the controller
- **3D printed** some of the components.

Results

- Designed for ultimate portability with dimensions of 450mm x 400mm x 208mm,
- It can be operated at a desired speed between 0.6 - 1.5 cm/s,
- It has a total travel distance of 11cm

WALID KATENDE

MECHANICAL ENGINEERING FROM ONDOKUZ MAYIS UNIVERSITY

walidkats@gmail.com
linkedin.com/in/katendewalid
(90) 553 - 835 31 52

DESIGN OF A VET OPERATING TABLE WITH PELTIER HEATER

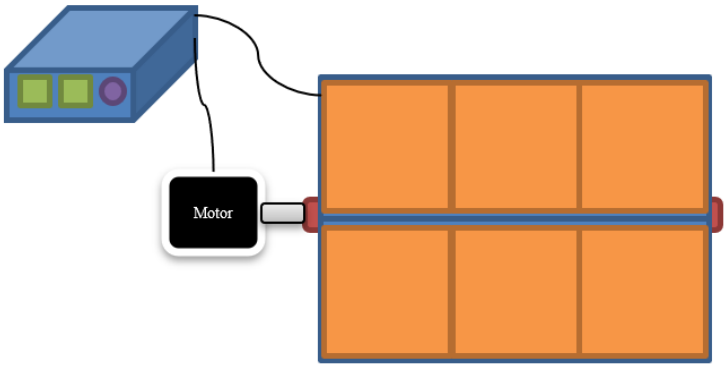

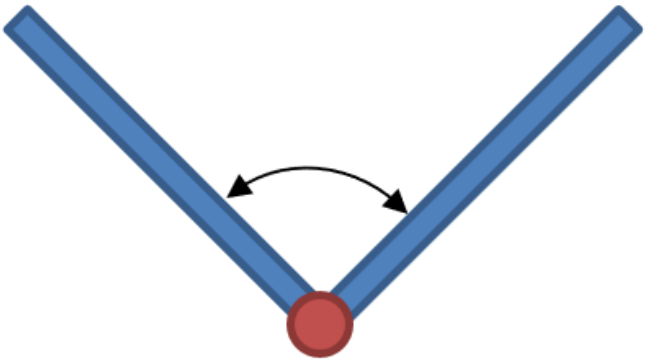

What?

- Design of an operating table for small lab animals, able to provide an adjustable constant surface temperature (Maximum 36C).
- Has an adjustable table surface to prevent the animal from rolling on the table during surgery, but able to be completely flat when desired.

How?

- Used **SolidWorks** to design and model the components of the table.
- Used **Arduino** as the controller of the table.
- Included **PID control** in the **Arduino program** to cater for the temperature changes.

Results

- The table surface angle can be adjusted between 45 - 180 degrees, depending on the requirement.
- The surface can be heated to a set constant temperature between 18 - 36 degrees celsius.

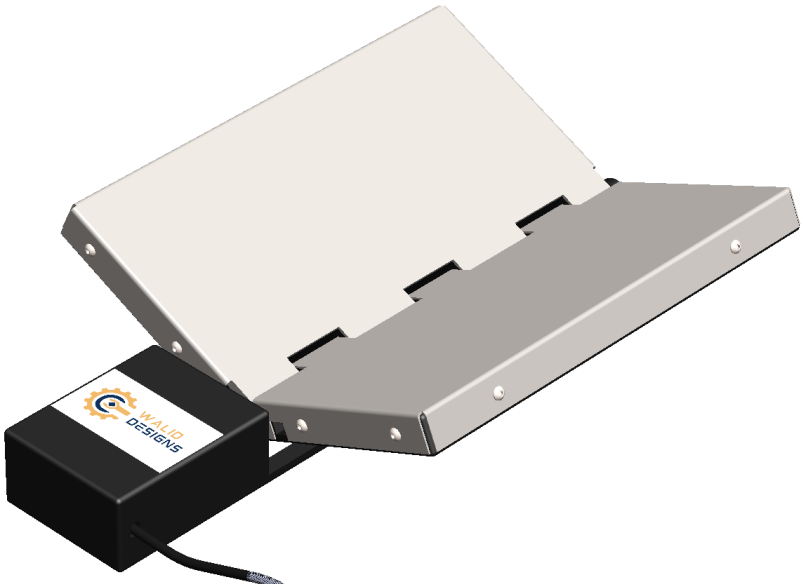

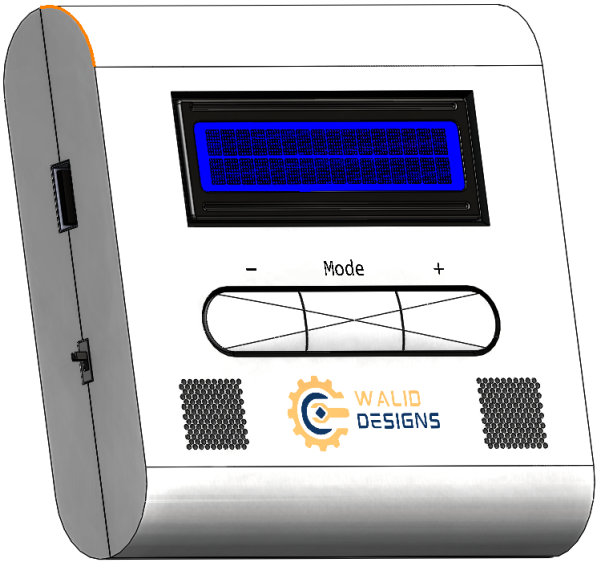

WALID KATENDE

MECHANICAL ENGINEERING FROM ONDOKUZ MAYIS UNIVERSITY

walidkats@gmail.com
linkedin.com/in/katendewalid
(90) 553 - 835 31 52

TCM CONTROLLER MOBILE APP

What?

- Design of an **android mobile app** to control the **Tape casting machine via bluetooth** so as to reduce the components in its control panel.

How?

- Used **Canva** to design the mobile app prototype for a visual plan of the design.
- Used **MIT App Inventor** to build and publish a fully functional android mobile app with bluetooth functions.
- Included a **Bluetooth module** in the Tape casting machine control panel for bluetooth communication.

REDUCTION GEARBOX DESIGN

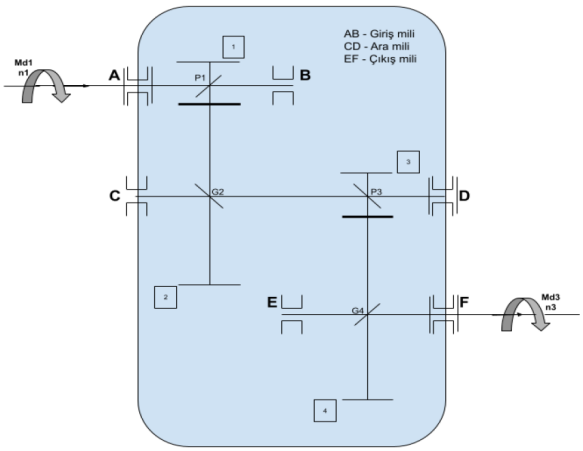

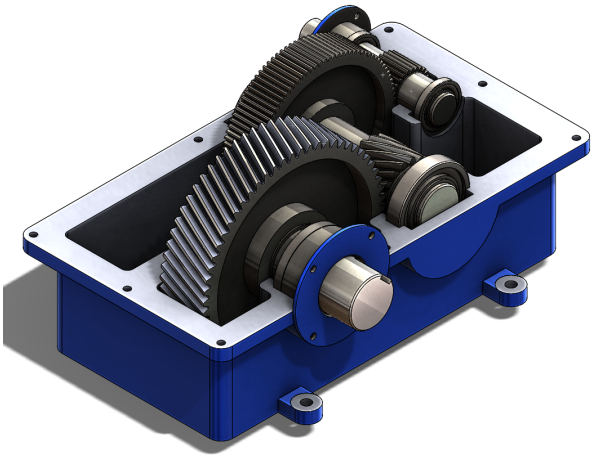

What?

- Design of a reduction gearbox with an input rotational speed of 1500 rpm and an overall gear ratio of 14 to transmit 12kW of power,

How?

- Made hand calculations to initiate the design process.
- Used SolidWorks to design and 3D model all the components, later on assembling and simulate the gearbox.
- Used the Drawings feature in SolidWorks to produce detailed technical drawings of all the components of the gearbox.