深度学习与文本分析

2026年4月

本节课内容

- Attention 机制和 **Transformer 结构**

Recap: 循环神经网络

RNN

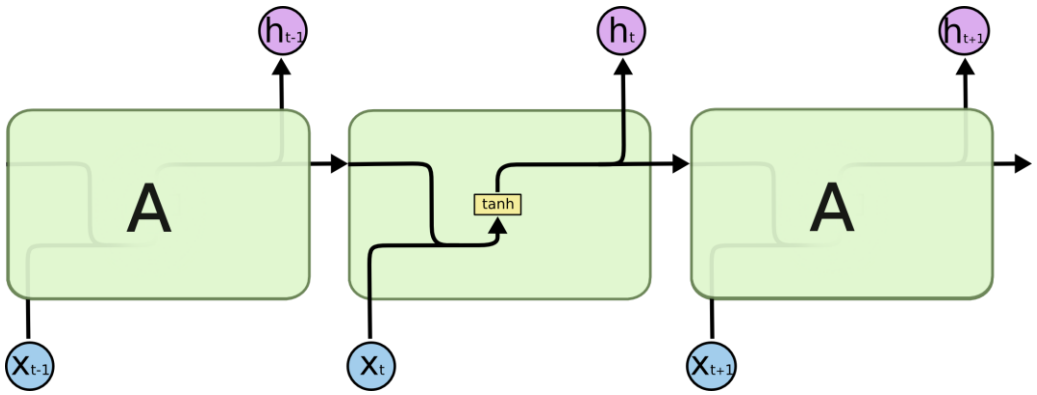

LSTM

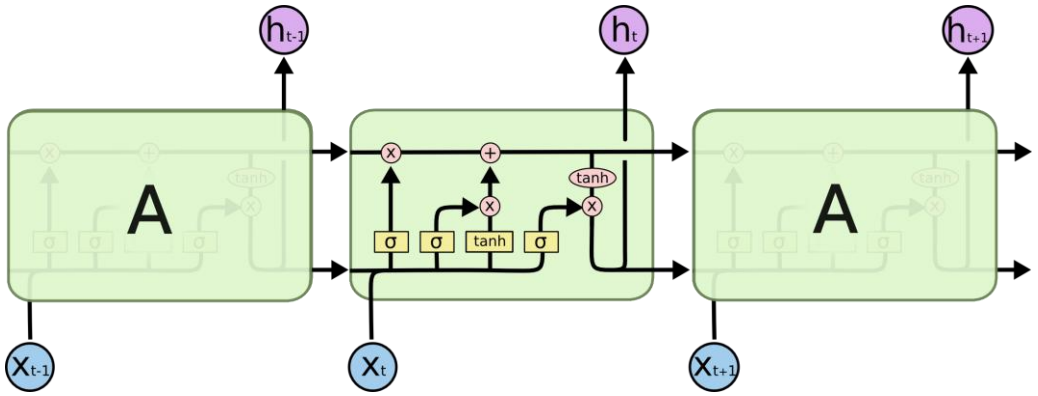

在计算过程中保留记忆（**memory**）

Recap: Attention-based Model

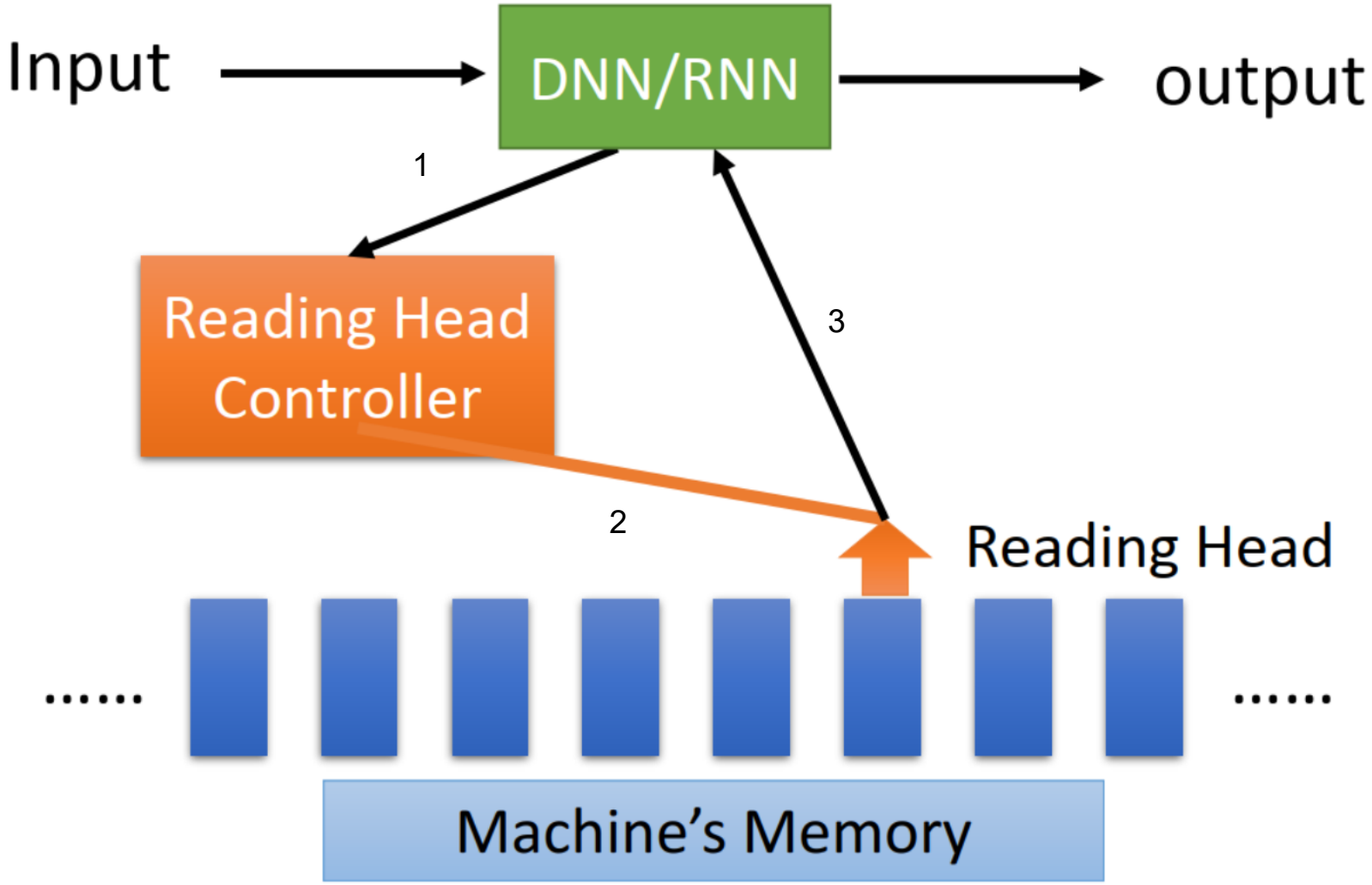

核心动机

•解决RNN/Seq2Seq模型的瓶颈：长距离依赖信息丢失、编码器输出向量信息过载。

Source: https://speech.ee.ntu.edu.tw/~hylee/ml/2020-spring.php

Recap: From Attention to Self-Attention

- 传统attention:
  - 跨序列；主要用于抽取关键信息或者基于信息的重要性加权。
  - 局限性：无法建模同一序列内部元素间的关系（如句子内部词与词的语义关联）。

- **Self-attention**, sometimes called intra-attention is an attention mechanism relating different positions of a single sequence in order to compute a representation of the sequence.

- 注意，Self-Attention和传统的Attention并不冲突。 可以在一个模型中同时存在。

Recap: Self-Attention

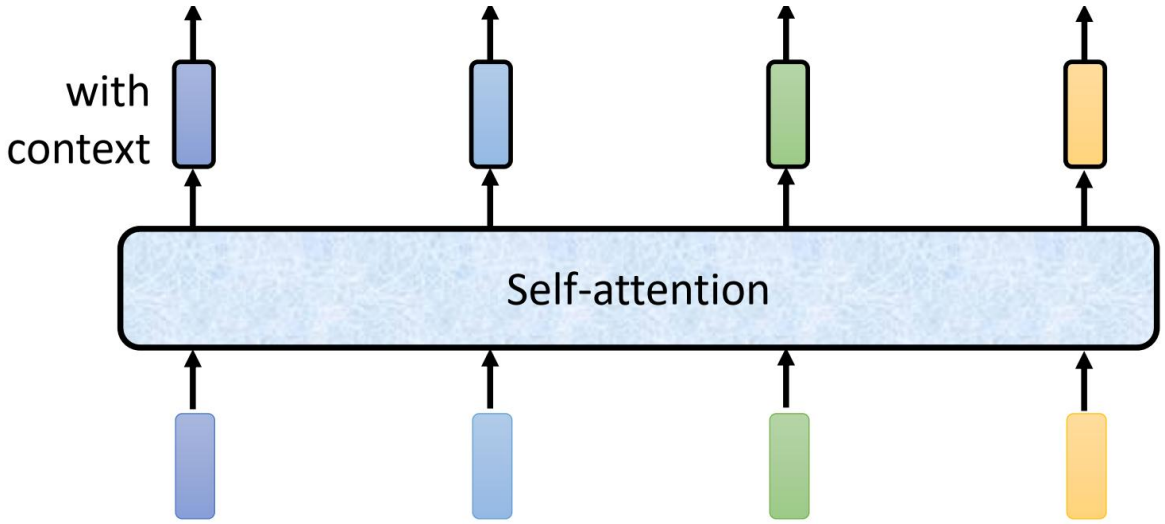

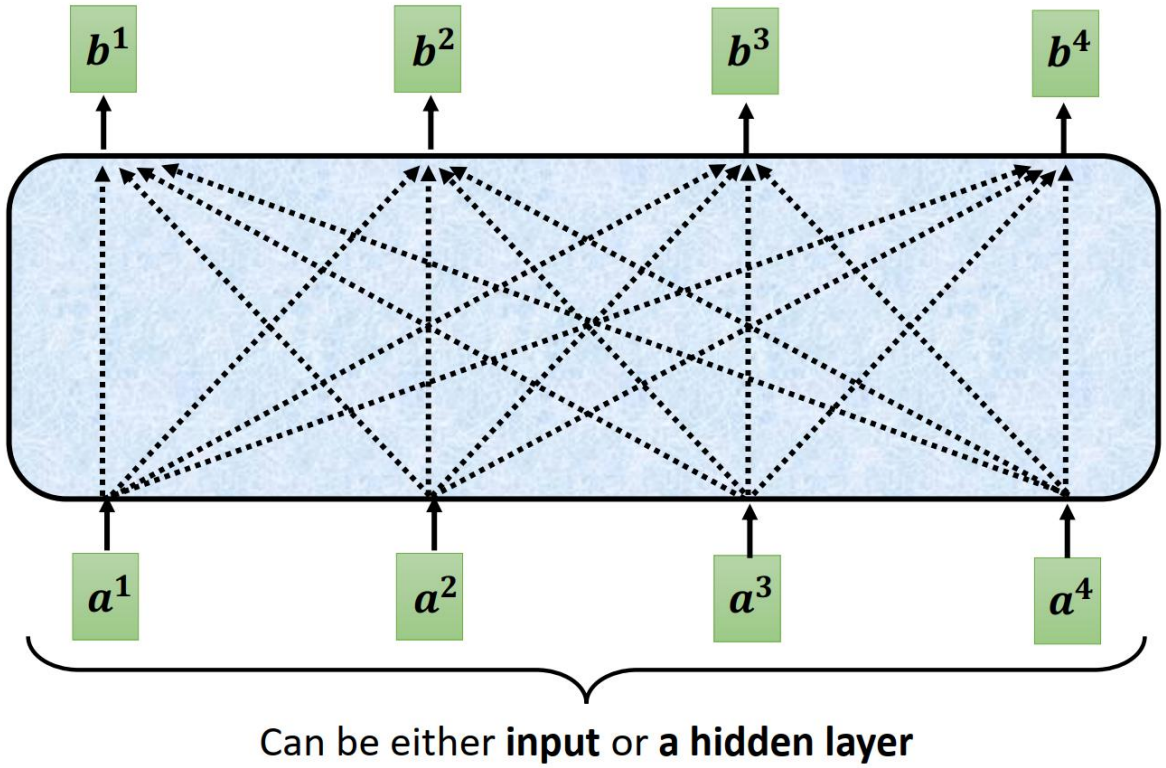

Source: https://speech.ee.ntu.edu.tw/~hylee/ml/2021-spring.php

Recap: Self-Attention VS. RNN

Recurrent Neural Network (RNN)

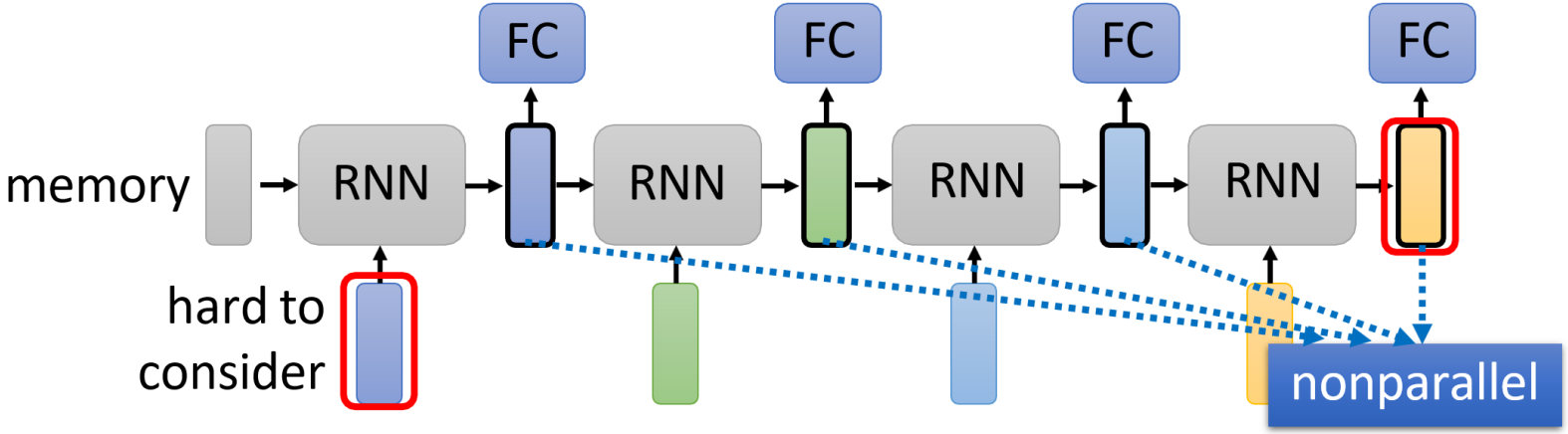

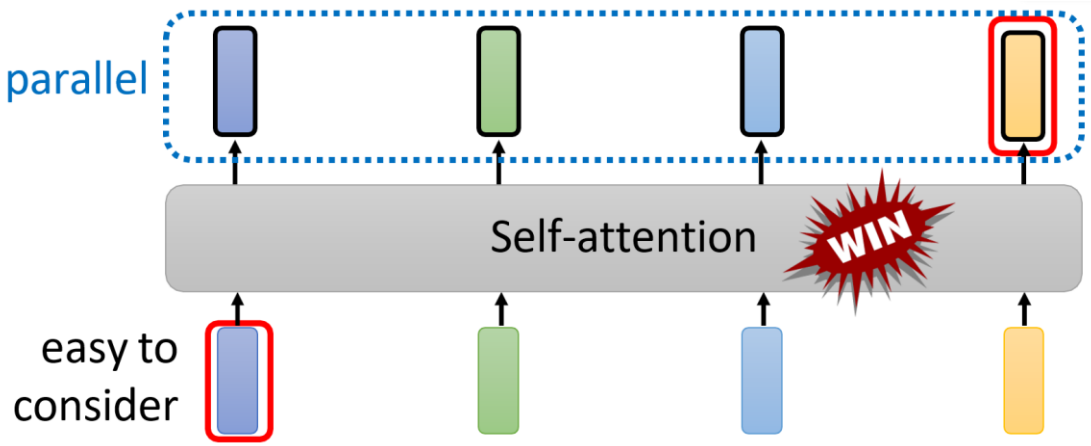

课外阅读self-attention和RNN的关系：
Transformers are RNNs: Fast Autoregressive Transformers with Linear Attention

Source: https://speech.ee.ntu.edu.tw/~hylee/ml/2021-spring.php

Transformer

Sequence-to-sequence结构 （Seq2seq）
输入一个序列，输出一个序列

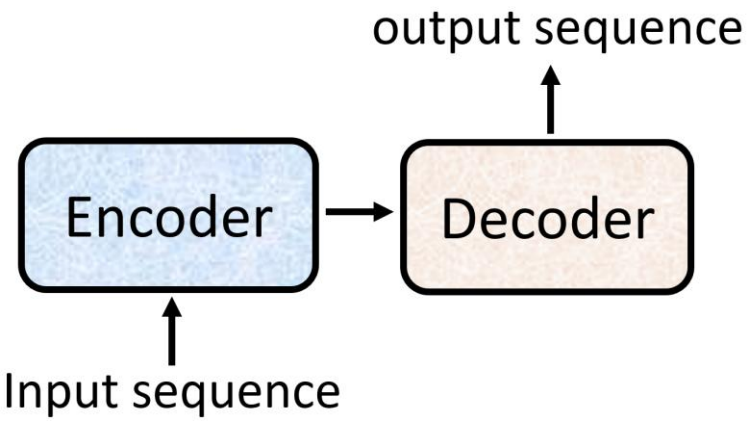

上下文的相对位置

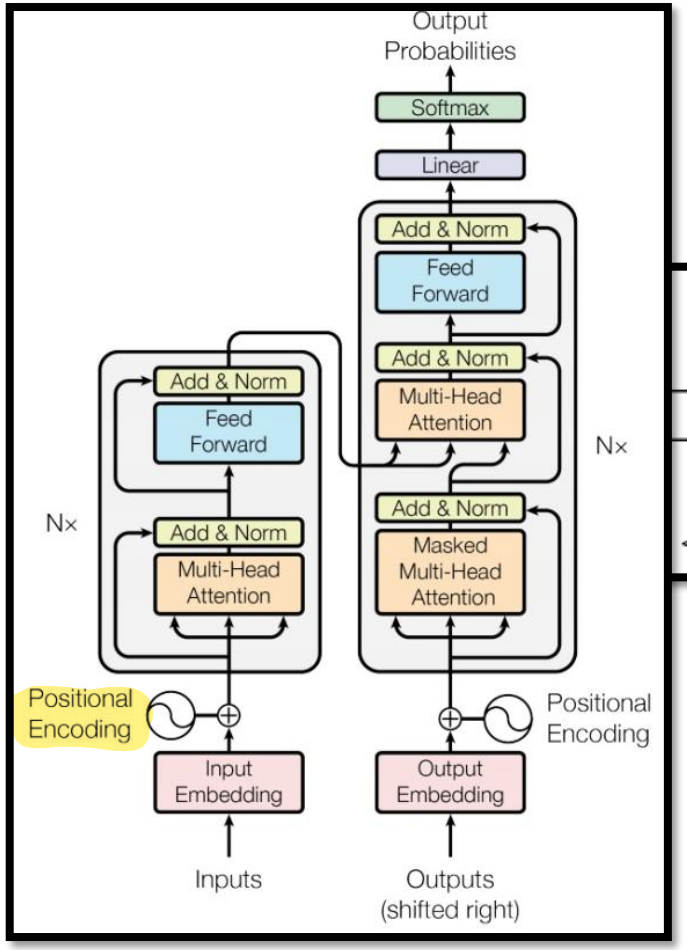

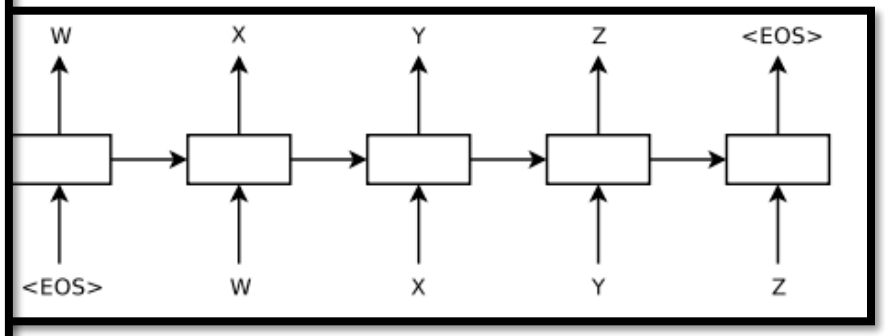

Transformer结构

很多自然语言处理的任务，都可以使用Sequence-to-sequence模型的结构

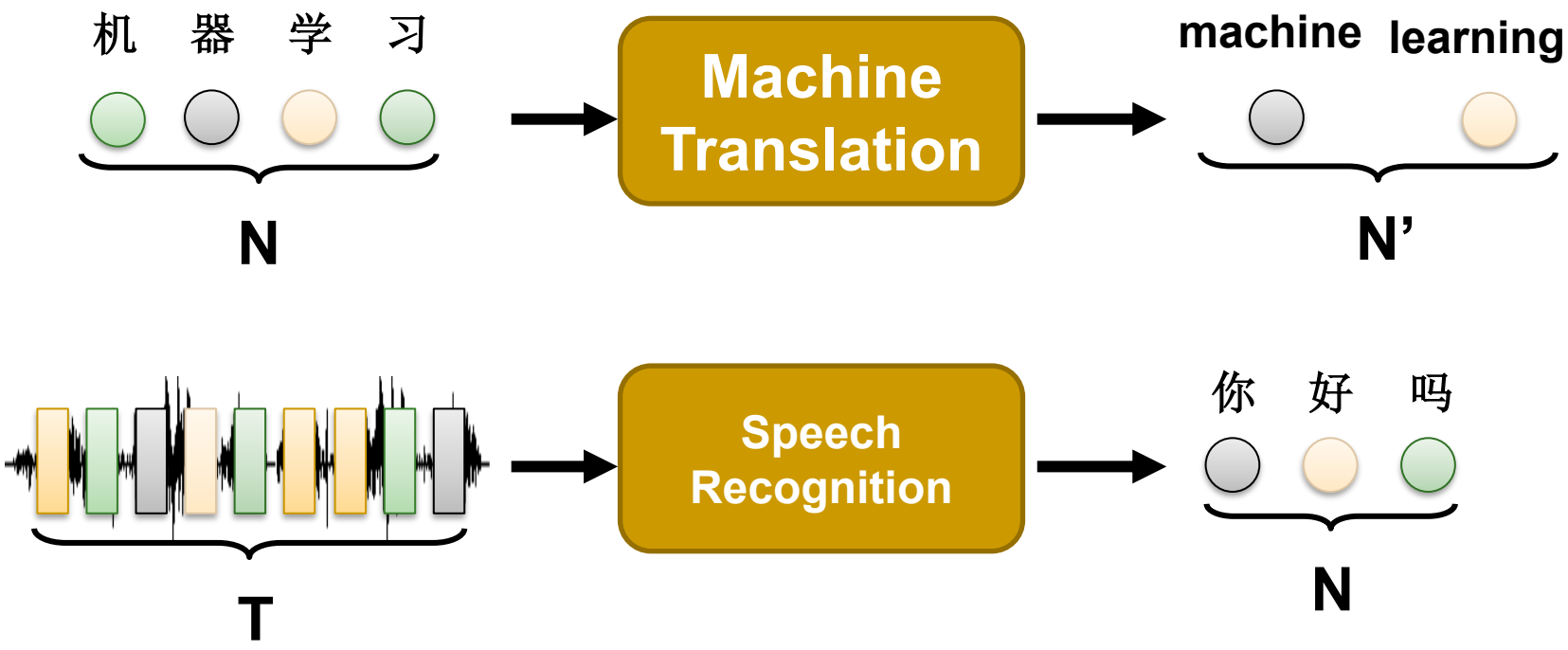

Source: https://speech.ee.ntu.edu.tw/~hylee/ml/2021-spring.php

Transformer

很多自然语言处理的任务，都可以使用Sequence-to-sequence模型的结构

Seq2seq for Chatbot

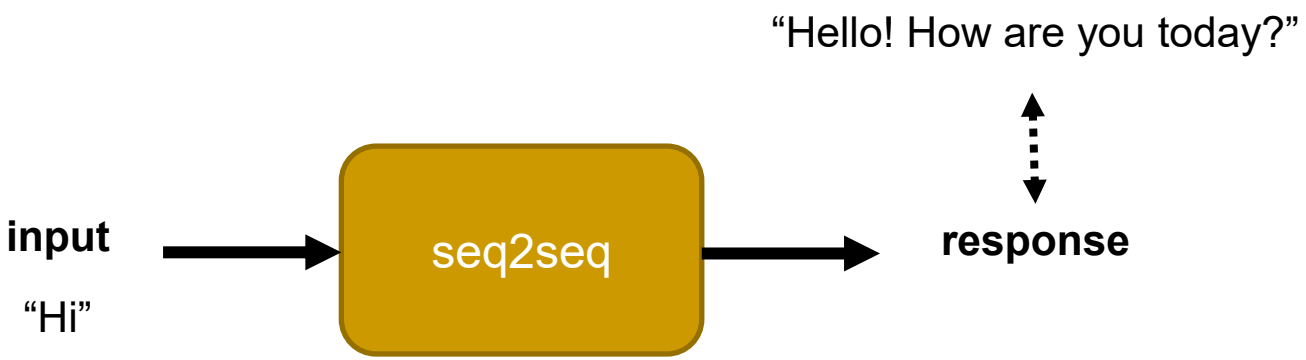

Training data:

[PERSON 1:] Hi
[PERSON 2:] Hello ! How are you today ?
[PERSON 1:] I am good thank you , how are you.
[PERSON 2:] Great, thanks ! My children and I were just about to watch Game of Thrones.
[PERSON 1:] Nice ! How old are your children?
[PERSON 2:] I have four that range in age from 10 to 21. You?
[PERSON 1:] I do not have children at the moment.
[PERSON 2:] That just means you get to keep all the popcorn for yourself.
[PERSON 1:] And Cheetos at the moment!
[PERSON 2:] Good choice. Do you watch Game of Thrones?
[PERSON 1:] No, I do not have much time for TV.
[PERSON 2:] I usually spend my time painting: but, I love the show.

Source: https://speech.ee.ntu.edu.tw/~hylee/ml/2021-spring.php

Transformer

很多自然语言处理的任务，都可以使用Sequence-to-sequence模型的结构

Seq2seq for Question Answering (QA)

Question	Context	Answer
What is a major importance of Southern California in relation to California and the US?	...Southern California is a major economic center for the state of California and the US....	major economic center
What is the translation from English to German?	Most of the planet is ocean water.	Der Großteil der Erde ist Meerwasser
What is the summary?	Harry Potter star Daniel Radcliffe gains access to a reported £320 million fortune...	Harry Potter star Daniel Radcliffe gets £320M fortune...
Hypothesis: Product and geography are what make cream skimming work. Entailment, neutral, or contradiction?	Premise: Conceptually cream skimming has two basic dimensions – product and geography.	Entailment
Is this sentence positive or negative?	A stirring, funny and finally transporting re-imagining of Beauty and the Beast and 1930s horror film.	positive

Source: https://speech.ee.ntu.edu.tw/~hylee/ml/2021-spring.php
https://arxiv.org/abs/1806.08730
https://arxiv.org/abs/1909.03329

Transformer

很多自然语言处理的任务，都可以使用Sequence-to-sequence模型的结构

不是对话类的任务也可以"魔改"成seq2seq

Seq2seq for Multi-label Classification

An object can belong to multiple classes.

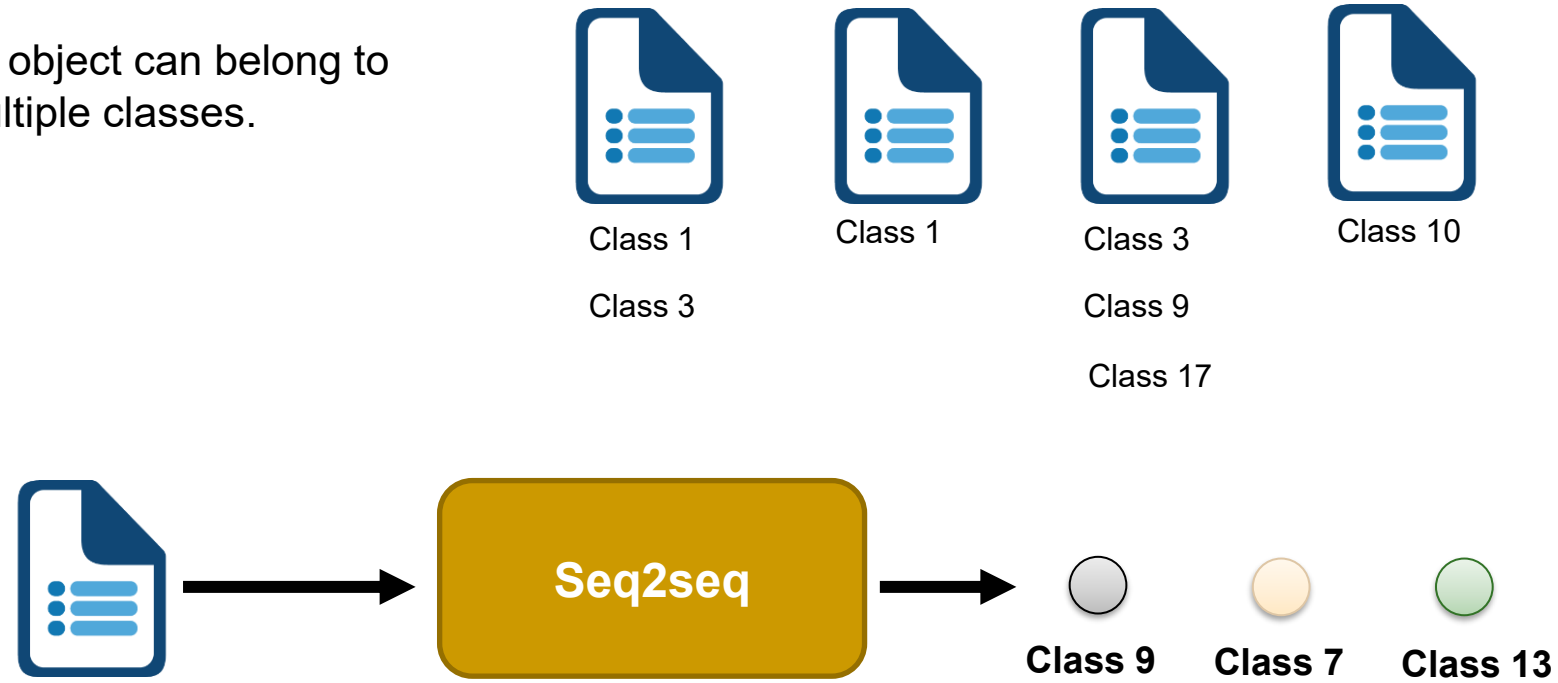

Source: https://speech.ee.ntu.edu.tw/~hylee/ml/2021-spring.php
https://arxiv.org/abs/1909.03434
https://arxiv.org/abs/1707.05495

Transformer 结构

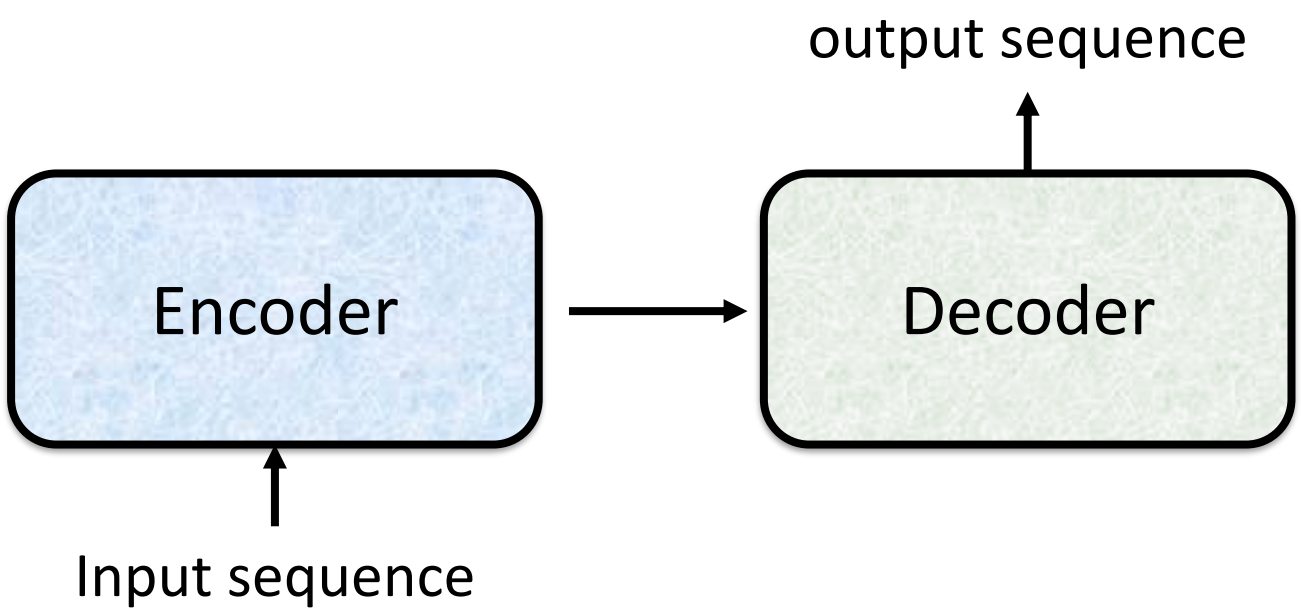

Source: https://speech.ee.ntu.edu.tw/~hylee/ml/2021-spring.php

Transformer – Encoder结构

encoder的核心组件是self-attention

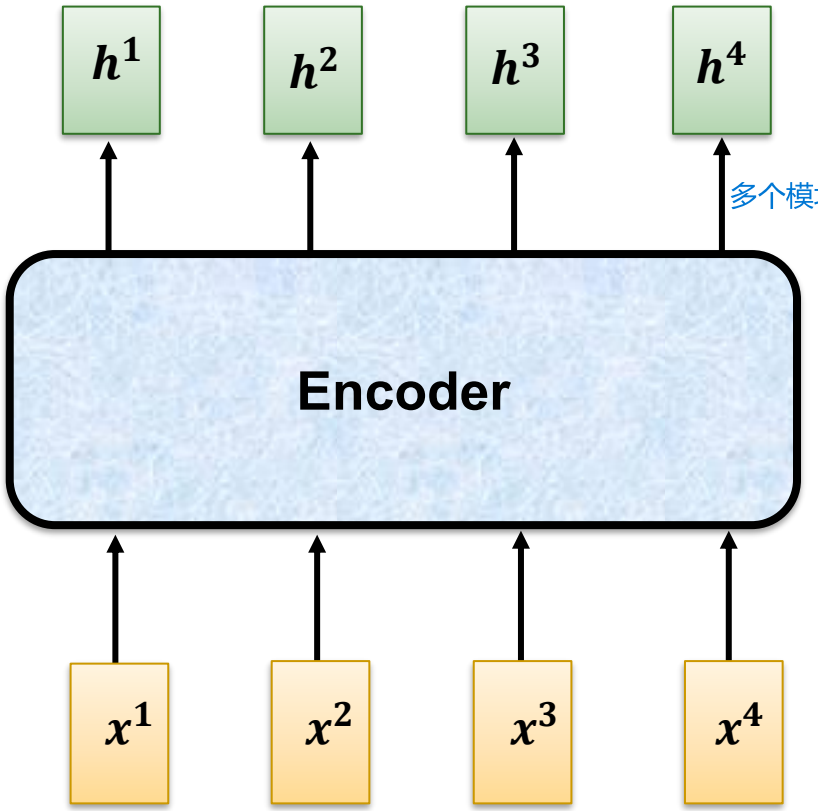

多个模块堆叠起来

Transformer's Encoder

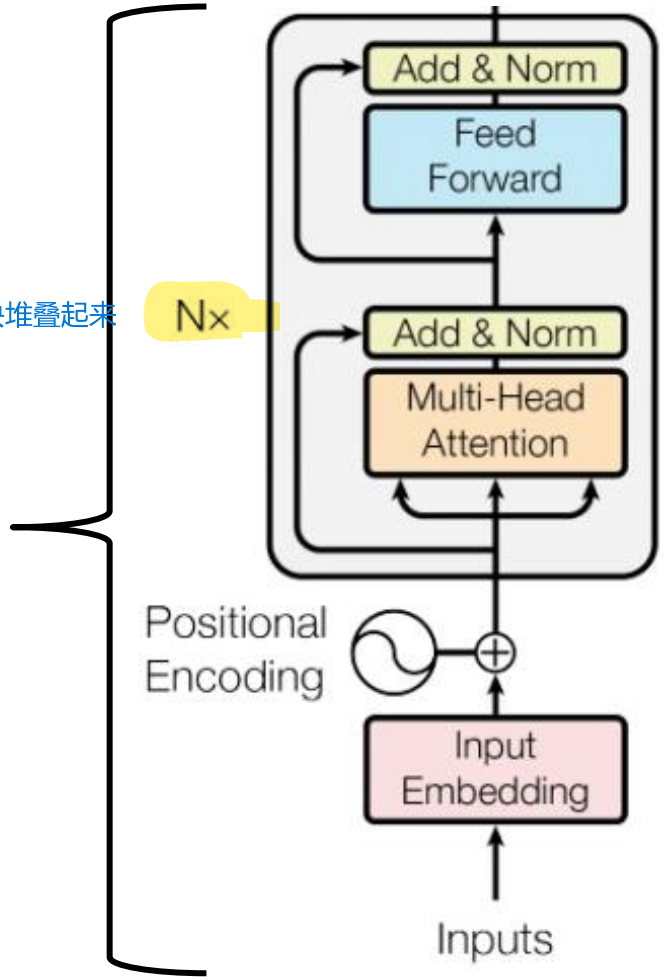

Source: https://speech.ee.ntu.edu.tw/~hylee/ml/2021-spring.php

Transformer – Encoder结构

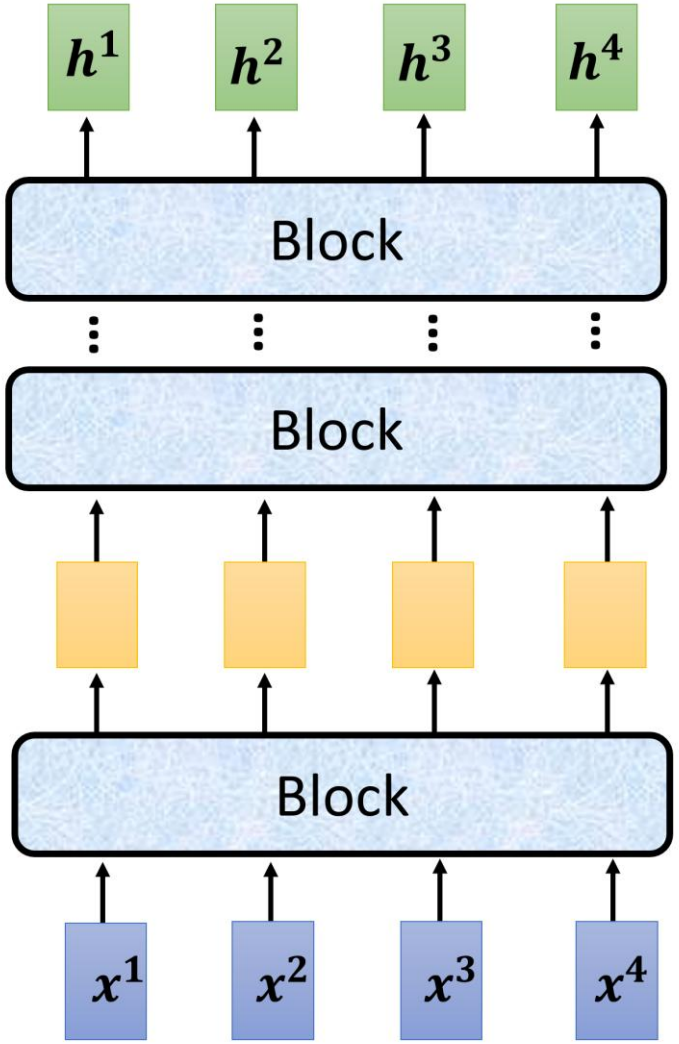

层层堆叠是为了构造深的模型，学到更多特征

Source: https://speech.ee.ntu.edu.tw/~hylee/ml/2021-spring.php

Transformer – Encoder结构

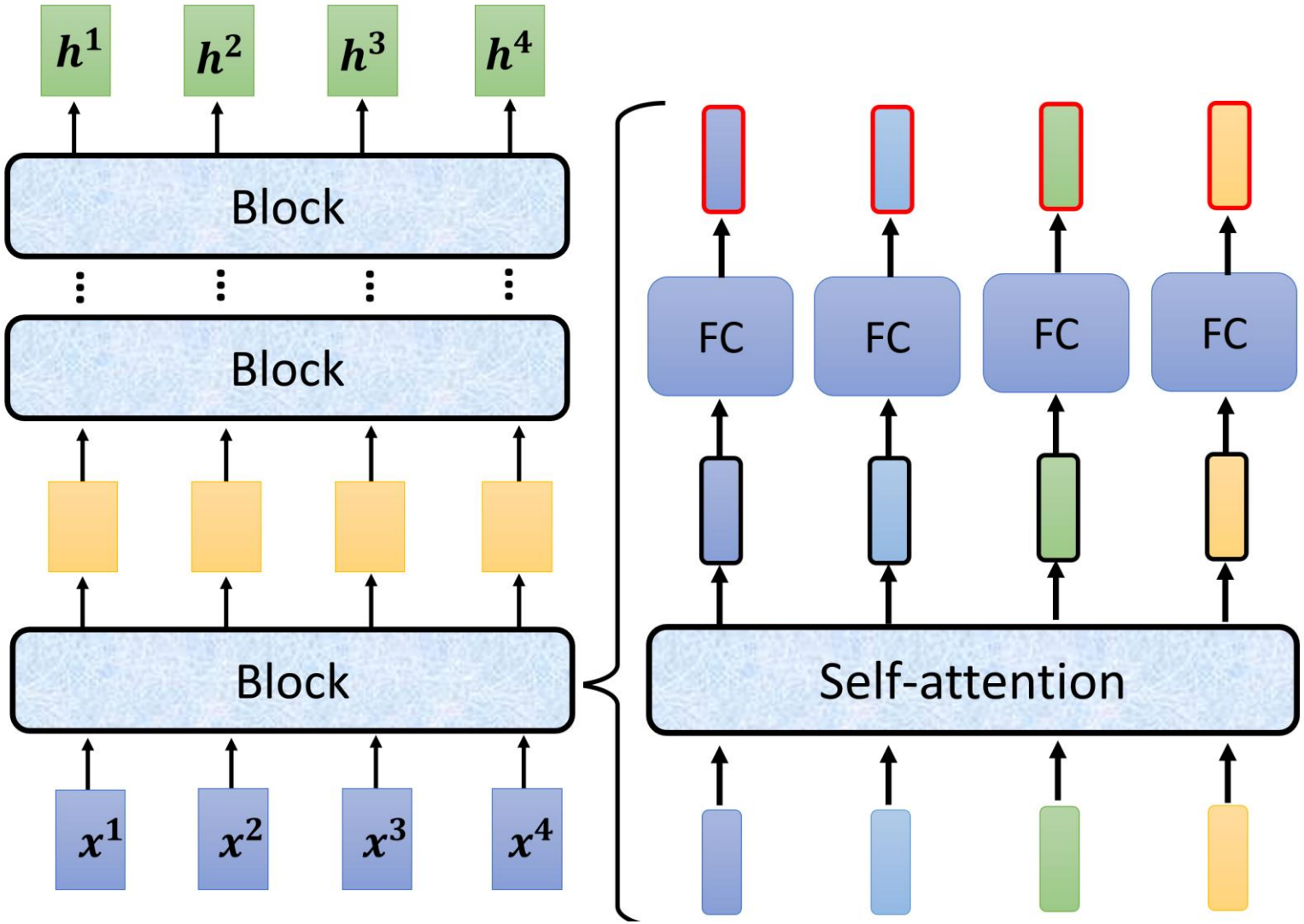

接下来讲讲每个block做了什么

Source: https://speech.ee.ntu.edu.tw/~hylee/ml/2021-spring.php

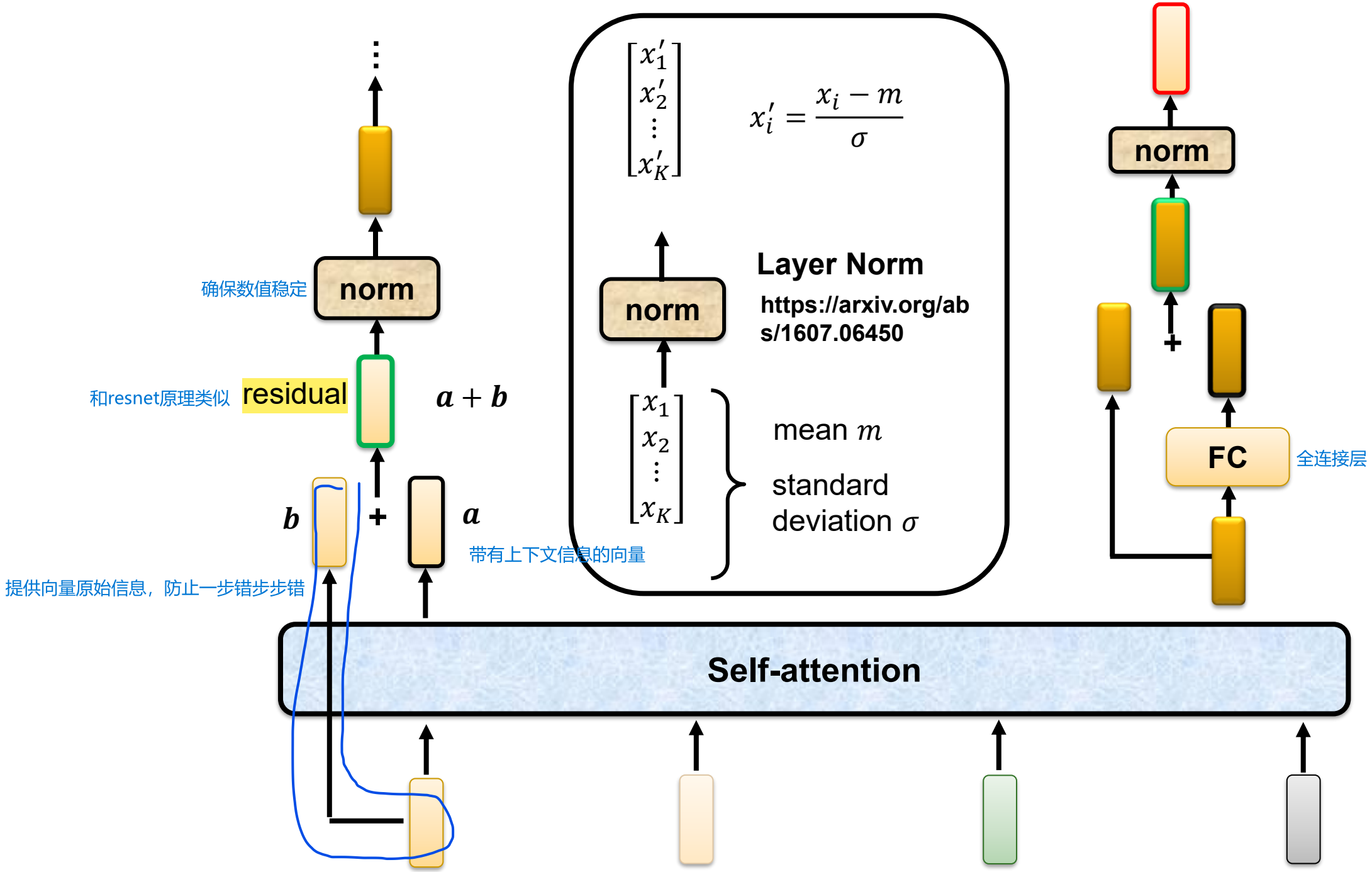
确保数值稳定
norm
和resnet原理类似
residual
$a + b$
b
+
a
带有上下文信息的向量
提供向量原始信息，防止一步错步步错
Self-attention
$\begin{bmatrix} x_1' \\ x_2' \\ \vdots \\ x_K' \end{bmatrix}$
$x_i' = \frac{x_i - m}{\sigma}$
norm
Layer Norm
https://arxiv.org/abs/1607.06450
$\begin{bmatrix} x_1 \\ x_2 \\ \vdots \\ x_K \end{bmatrix}$
mean m
standard deviation σ
norm
+
FC
全连接层

Transformer – Encoder结构

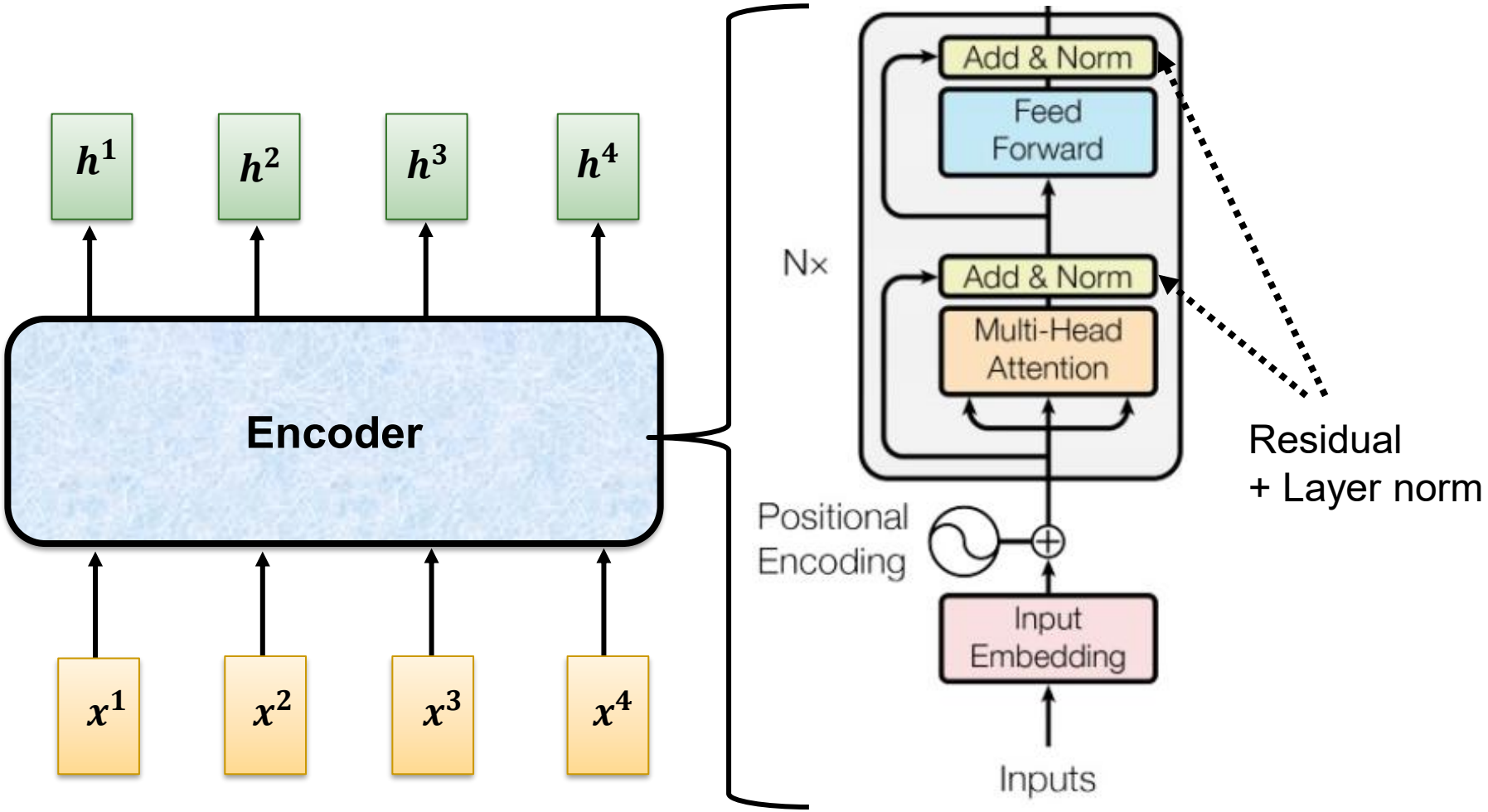

Source: https://speech.ee.ntu.edu.tw/~hylee/ml/2021-spring.php

Transformer – Encoder结构

Transformers without Normalization

Jiachen Zhu[1,2], **Xinlei Chen**[1], **Kaiming He**[3], **Yann LeCun**[1,2], **Zhuang Liu**[1,4,†]

[1]FAIR, Meta, [2]New York University, [3]MIT, [4]Princeton University
[†]Project lead

Normalization layers are ubiquitous in modern neural networks and have long been considered essential. This work demonstrates that Transformers without normalization can achieve the same or better performance using a remarkably simple technique. We introduce Dynamic Tanh (DyT), an element-wise operation $\mathrm{DyT}(\boldsymbol{x}) = \tanh(\alpha \boldsymbol{x})$, as a drop-in replacement for normalization layers in Transformers. DyT is inspired by the observation that layer normalization in Transformers often produces tanh-like, S-shaped input-output mappings. By incorporating DyT, Transformers without normalization can match or exceed the performance of their normalized counterparts, mostly without hyperparameter tuning. We validate the effectiveness of Transformers with DyT across diverse settings, ranging from recognition to generation, supervised to self-supervised learning, and computer vision to language models. These findings challenge the conventional understanding that normalization layers are indispensable in modern neural networks, and offer new insights into their role in deep networks.

Date: March 14, 2025
Project page and code: jiachenzhu.github.io/DyT
Correspondence: jiachen.zhu@nyu.edu, zhuangl@princeton.edu

Meta

Transformer结果并不是一成不变的。

Transformer – Encoder结构

Attention Residuals

Paper | arXiv | Overview | Results | Citation

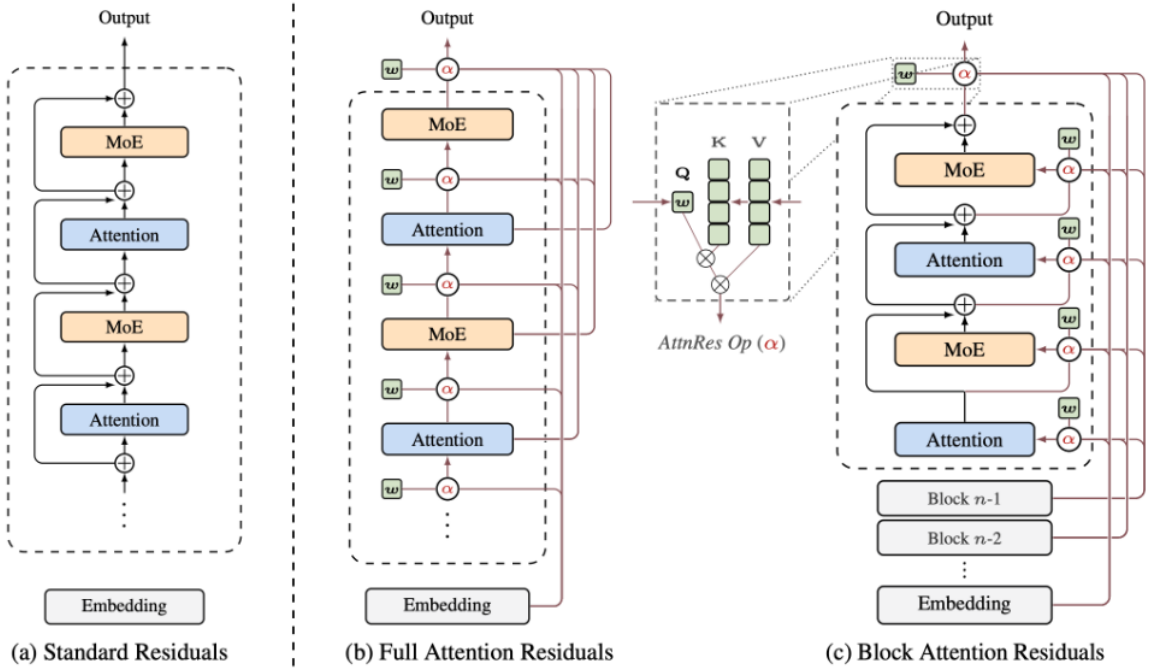

(a) Standard residuals with uniform additive accumulation. (b) Full AttnRes: each layer attends over all previous outputs. (c) Block AttnRes: layers are grouped into blocks, reducing memory from O(Ld) to O(Nd).

Transformer结果并不是一成不变的。

arXiv:2603.15031

Transformer – Encoder结构

TransformerEncoder

CLASS torch.nn.TransformerEncoder(*encoder_layer, num_layers, norm=None, enable_nested_tensor=True, mask_check=True*) [SOURCE]

TransformerEncoder is a stack of N encoder layers.

• NOTE

See this tutorial for an in depth discussion of the performant building blocks PyTorch offers for building your own transformer layers.

Users can build the BERT(https://arxiv.org/abs/1810.04805) model with corresponding parameters.

Parameters

- **encoder_layer** (*TransformerEncoderLayer*) – an instance of the TransformerEncoderLayer() class (required).
- **num_layers** (*int*) – the number of sub-encoder-layers in the encoder (required).
- **norm** (*Optional*[*Module*]) – the layer normalization component (optional).
- **enable_nested_tensor** (*bool*) – if True, input will automatically convert to nested tensor (and convert back on output). This will improve the overall performance of TransformerEncoder when padding rate is high. Default: `True` (enabled).

Examples::

```
>>> encoder_layer = nn.TransformerEncoderLayer(d_model=512, nhead=8)
>>> transformer_encoder = nn.TransformerEncoder(encoder_layer, num_layers=6)
>>> src = torch.rand(10, 32, 512)
>>> out = transformer_encoder(src)
```

Transformer – Decoder结构

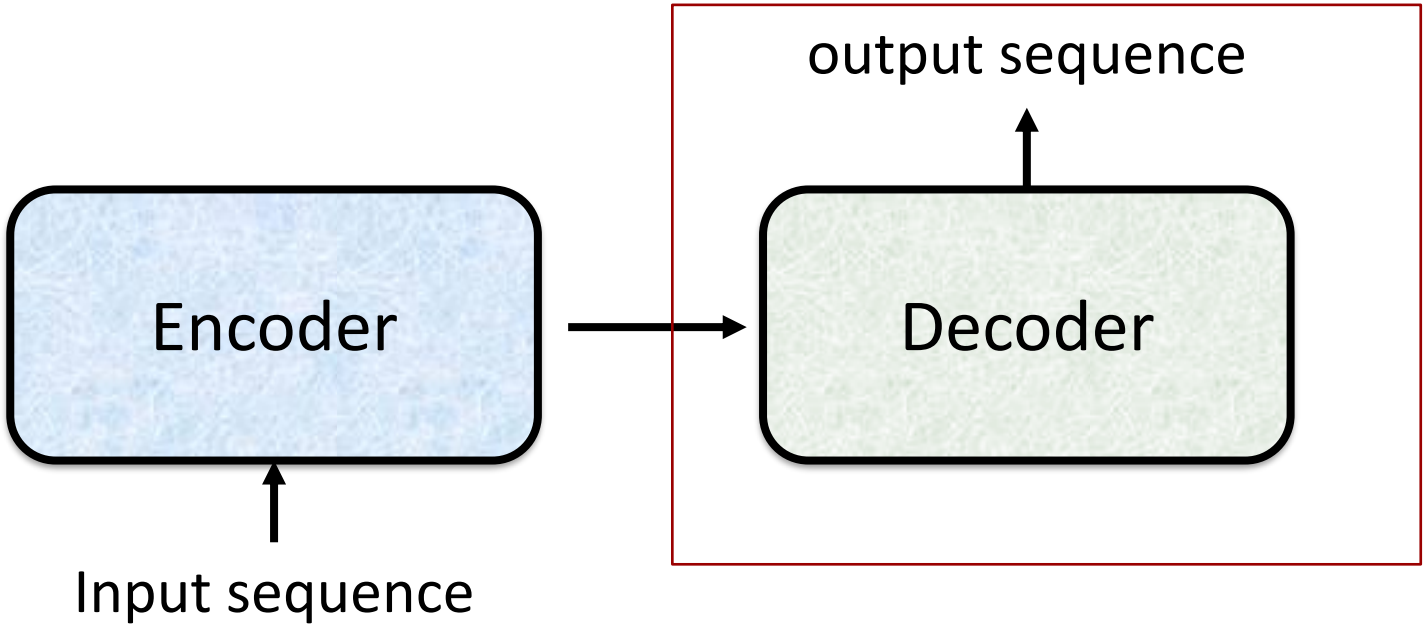

Autoregressive (AT)
Non-autoregressive (NAT)

Source: https://speech.ee.ntu.edu.tw/~hylee/ml/2021-spring.php

Transformer – Decoder结构

Autoregressive – Speech Recognition as example

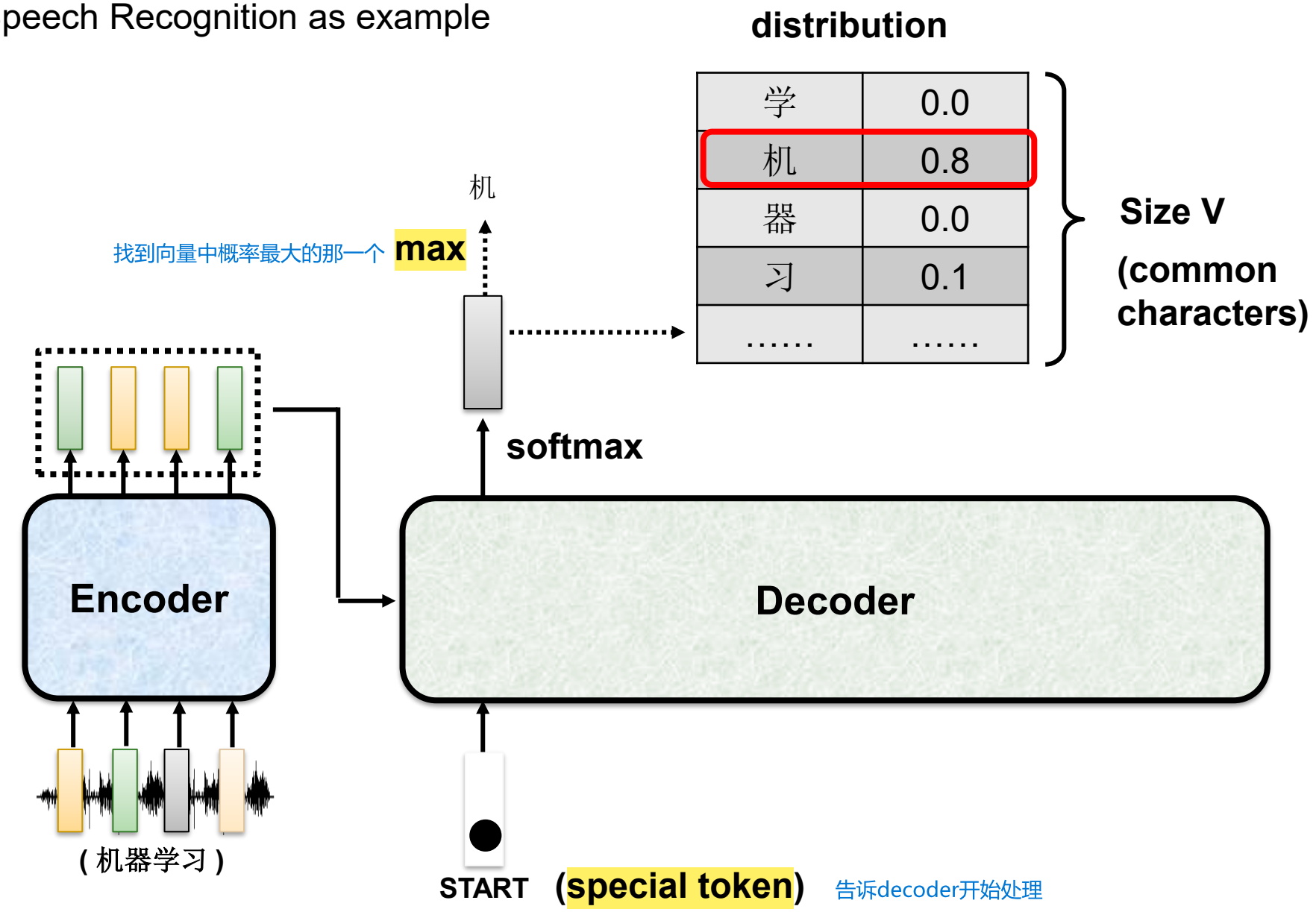

Transformer – Decoder结构

Autoregressive – Speech Recognition as example

输入包括上一次的输出

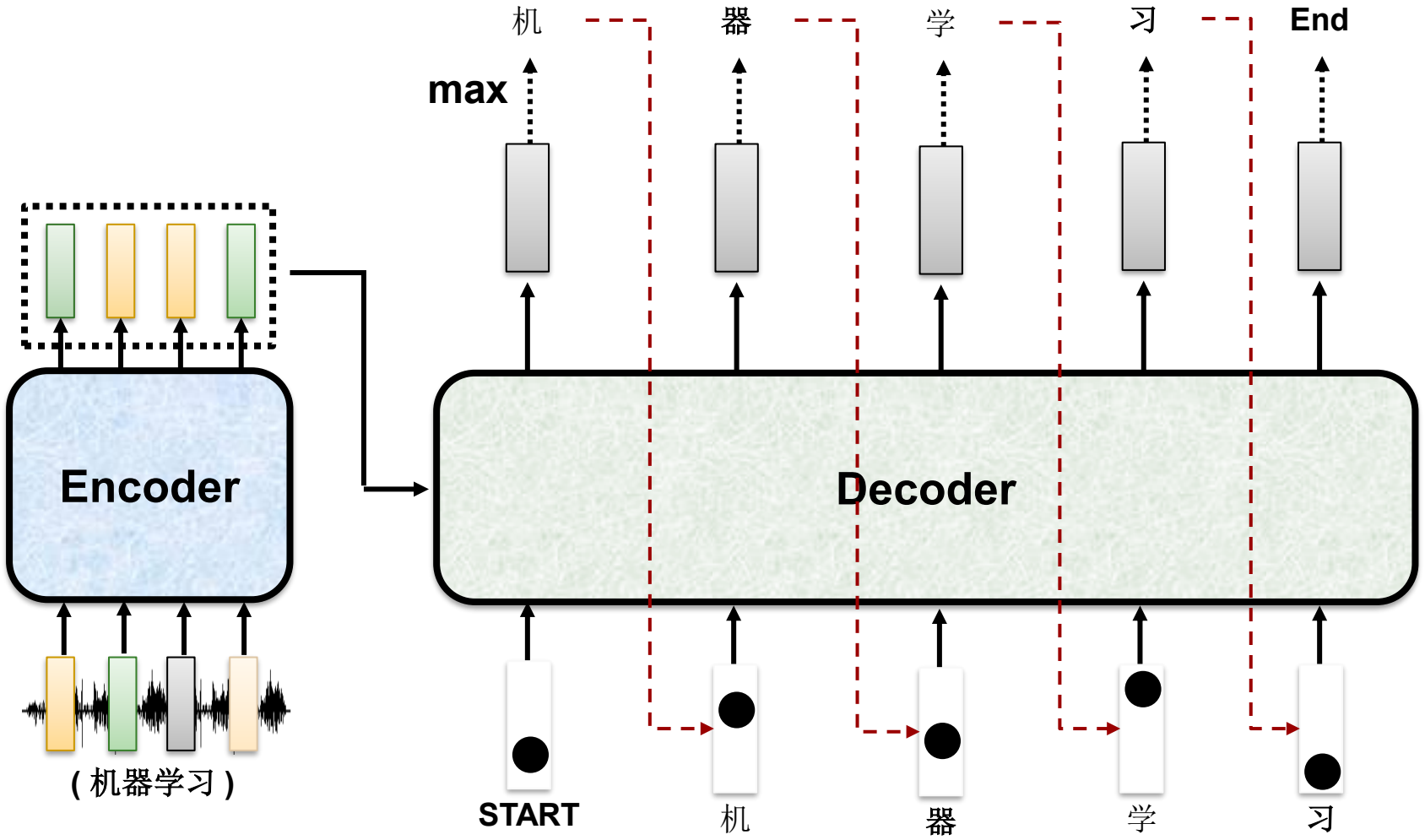

可能存在错误预测，导致一步错，步步错。 思考：应该怎么解决？有什么方法可以增加容错呢？

Transformer – Decoder结构

Autoregressive – Speech Recognition as example

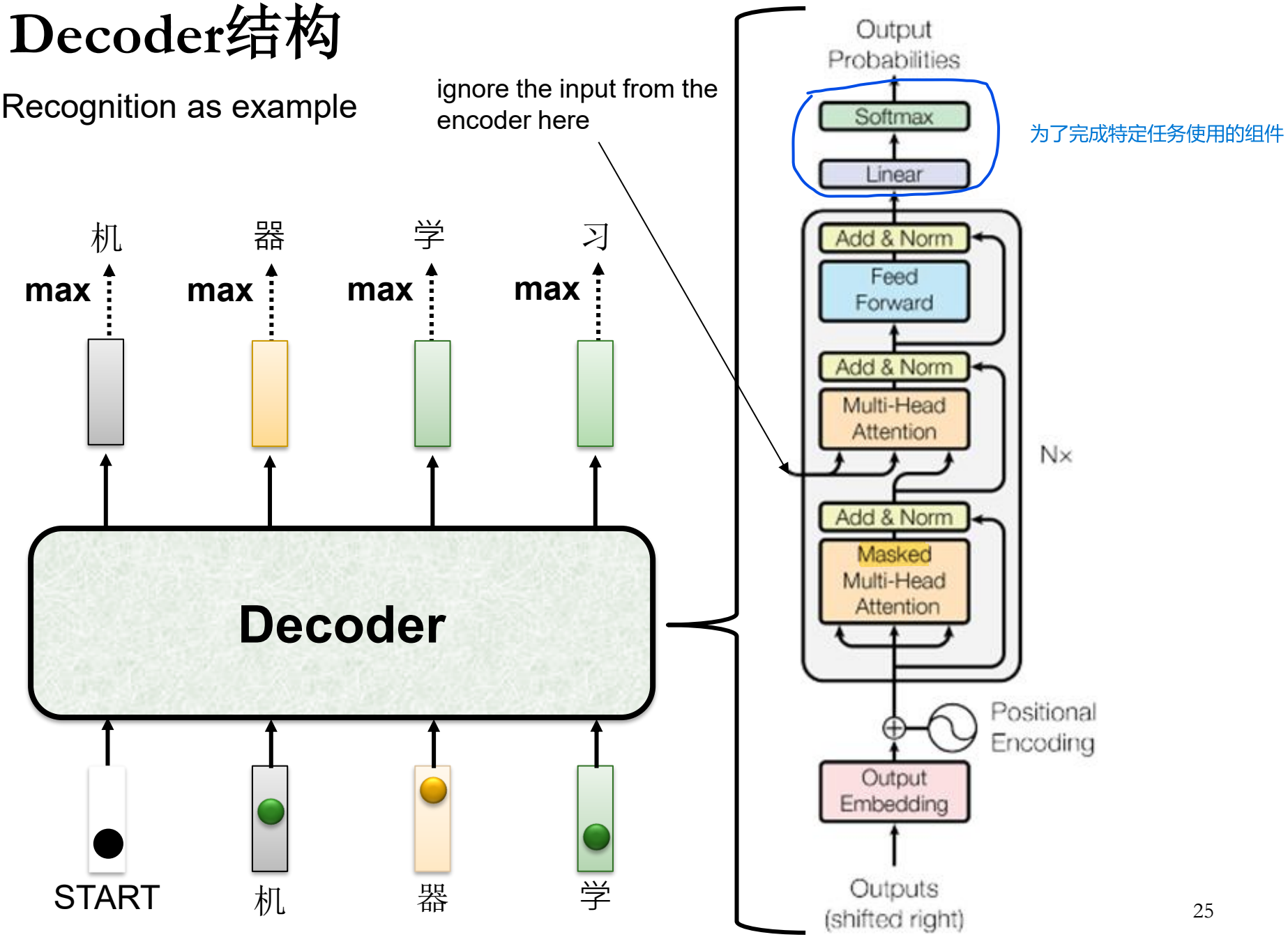

Transformer – Decoder结构

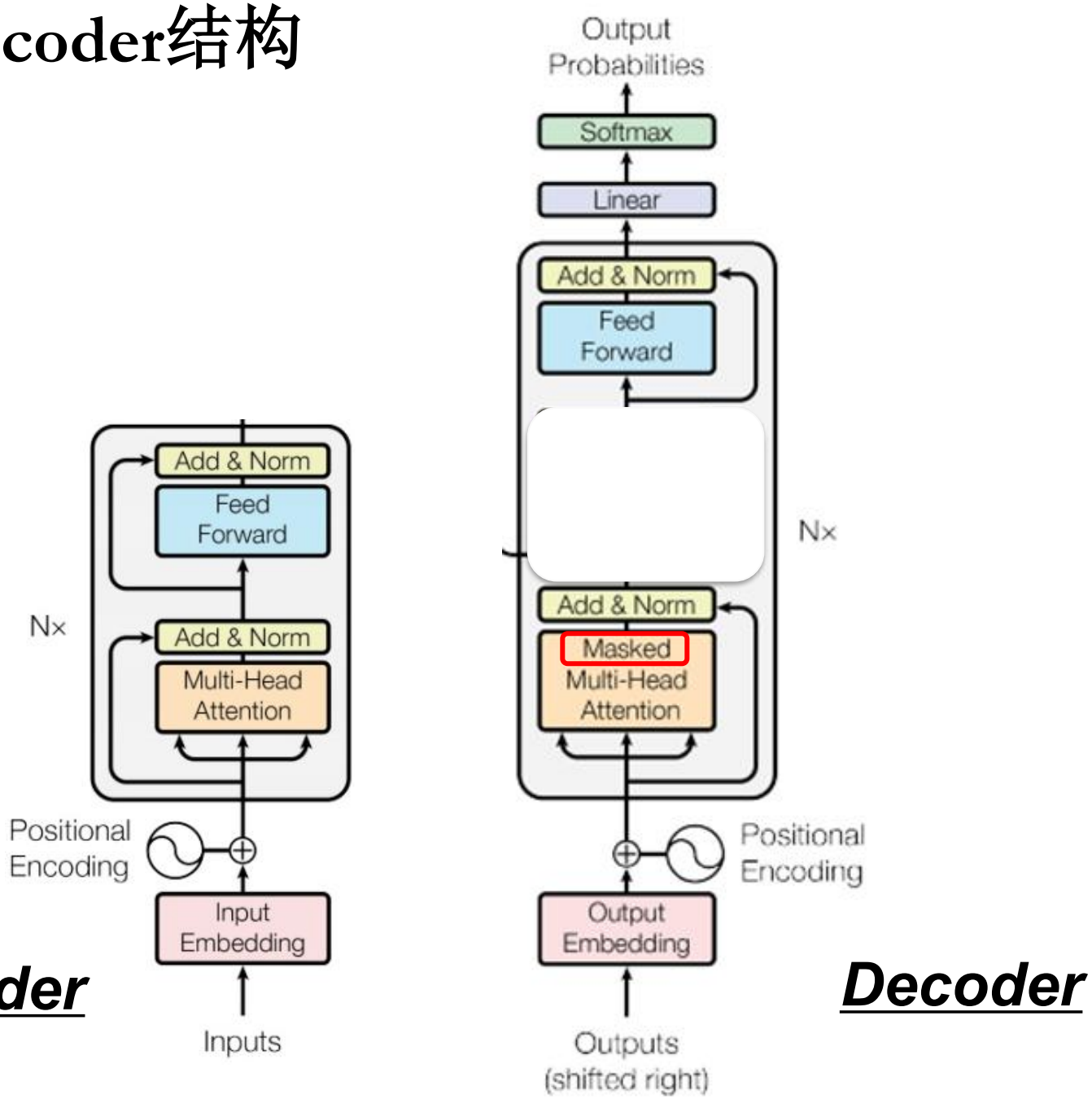

Encoder

Decoder

Transformer – Decoder结构

上下文　　只能看到上文

Self-attention → masked attention

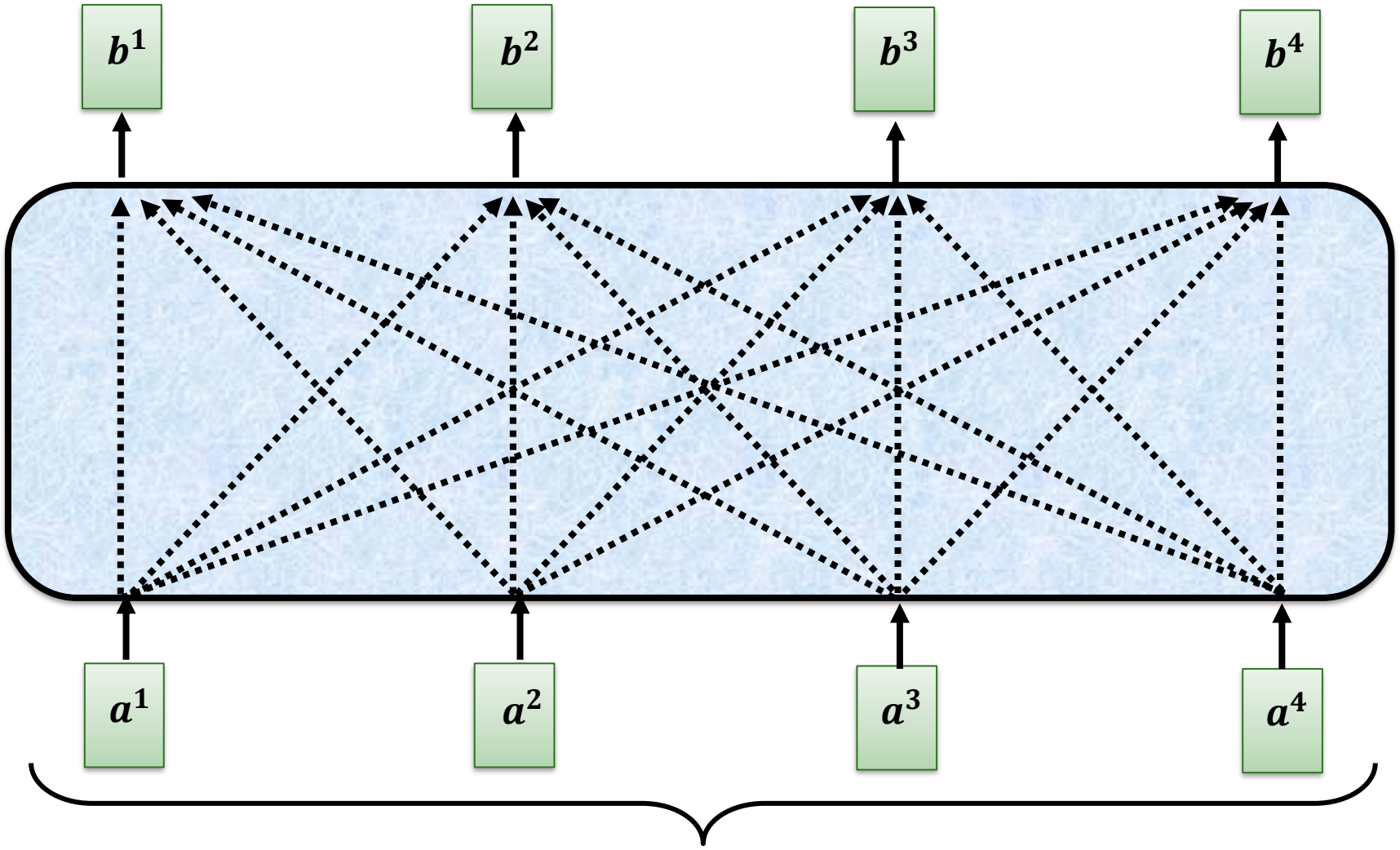

Can be either input or a hidden layer

Transformer – Decoder结构

Self-attention → masked attention

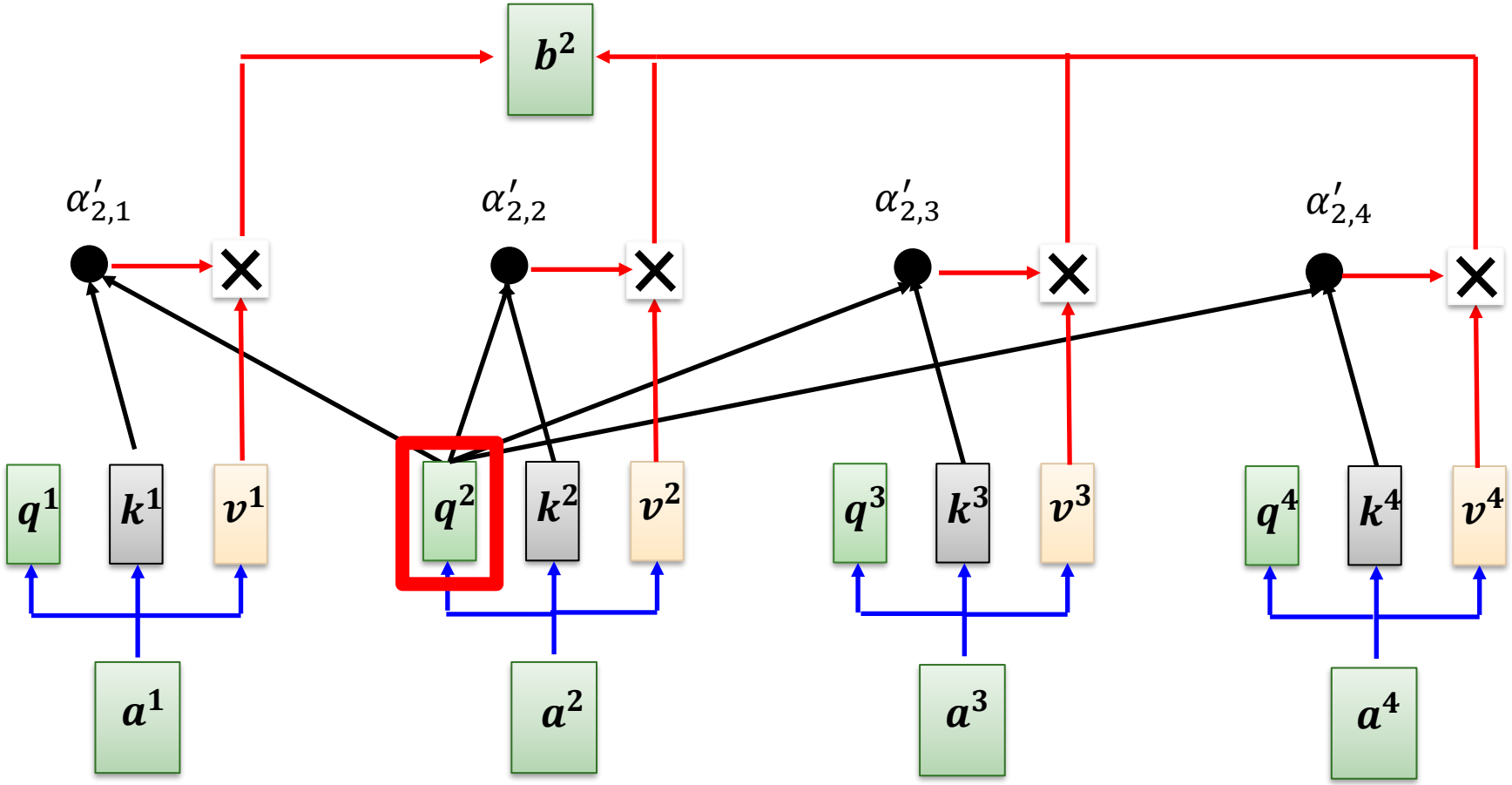

Why masked? **Consider how does decoder work**

Source: https://speech.ee.ntu.edu.tw/~hylee/ml/2021-spring.php

Transformer – Decoder结构

We do not know the correct output length.

Never stop!

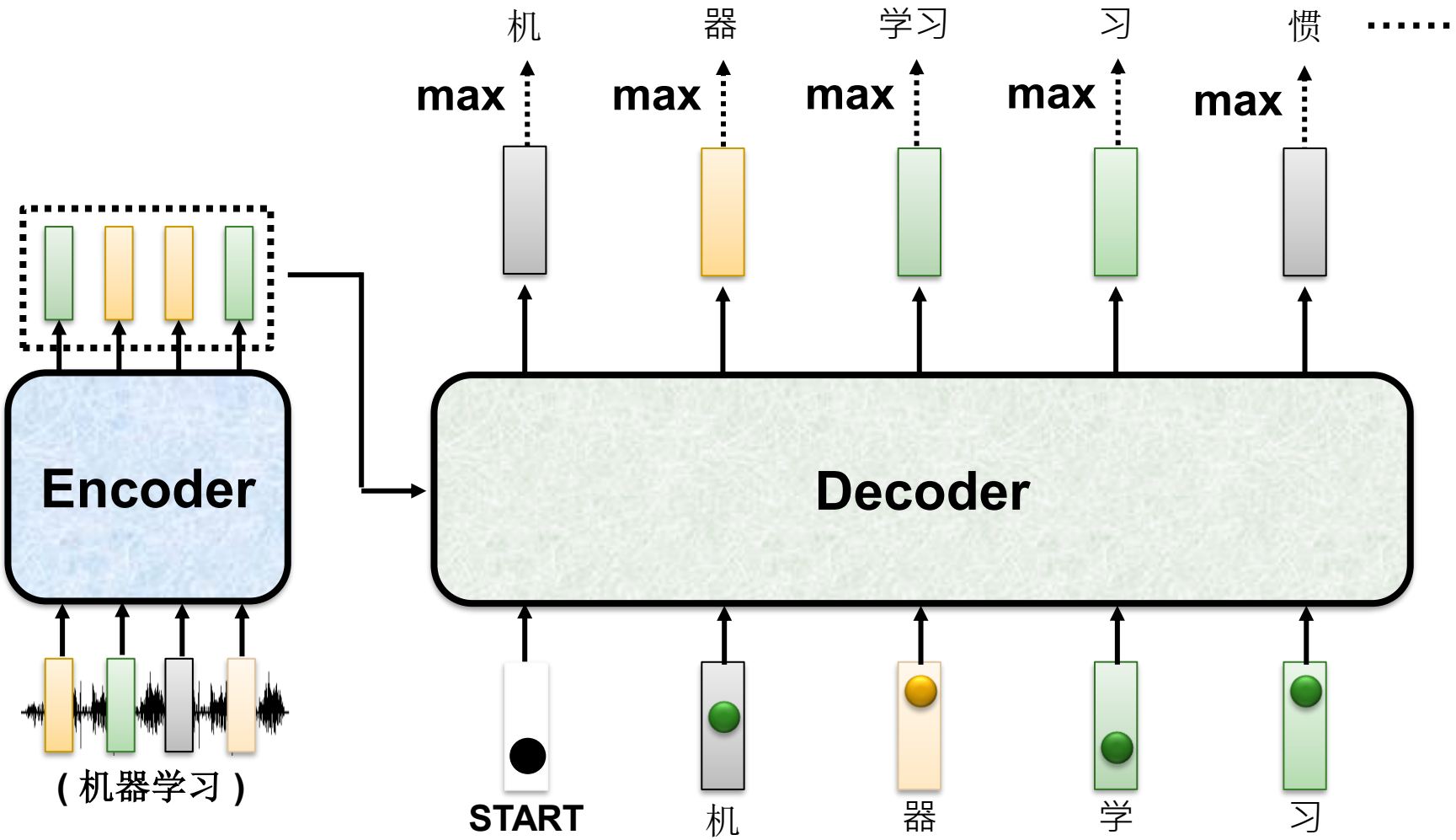

Transformer – Decoder结构

Adding "Stop Token"

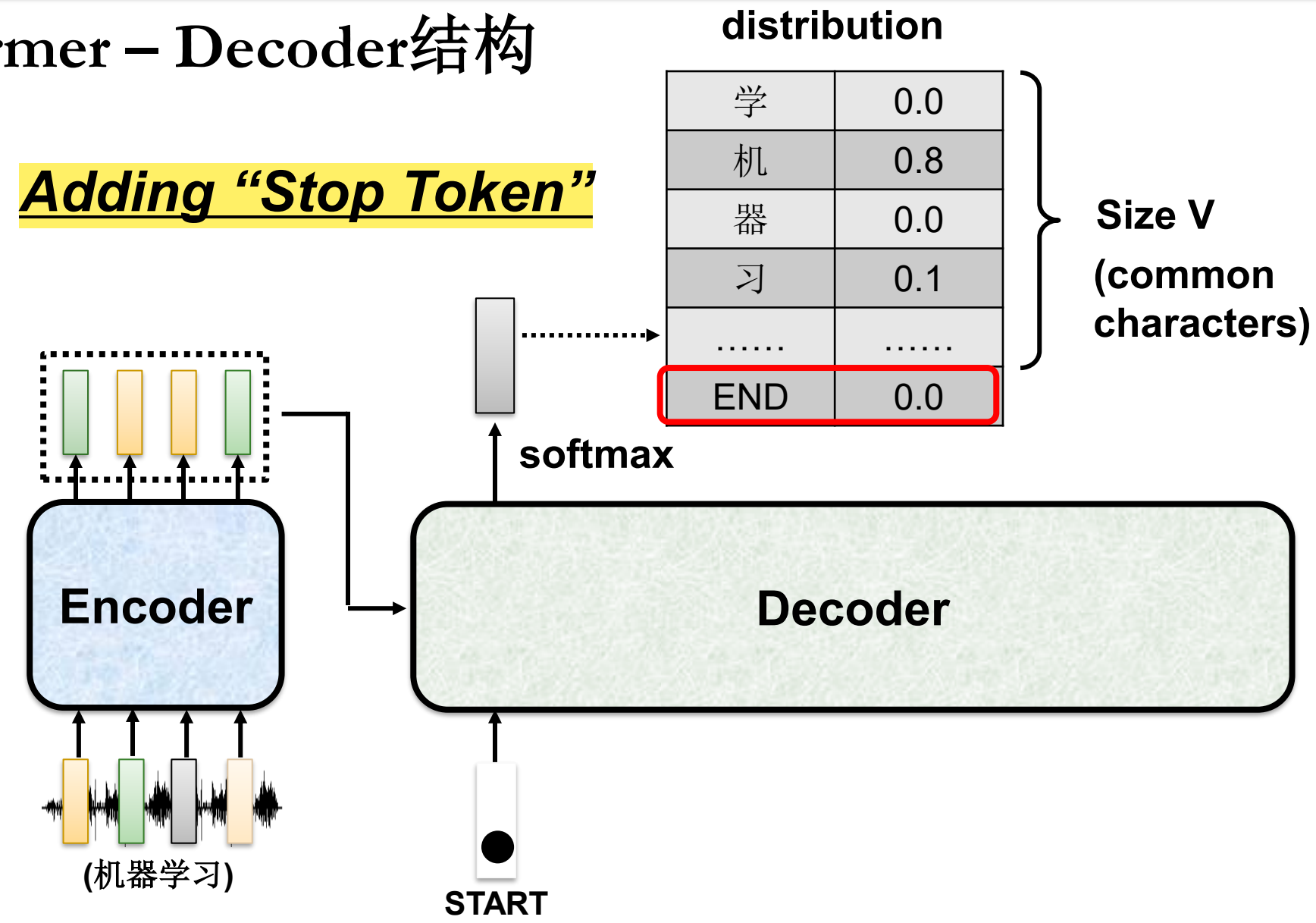

Transformer – Decoder结构

Autoregressive v.s. Non-autoregressive

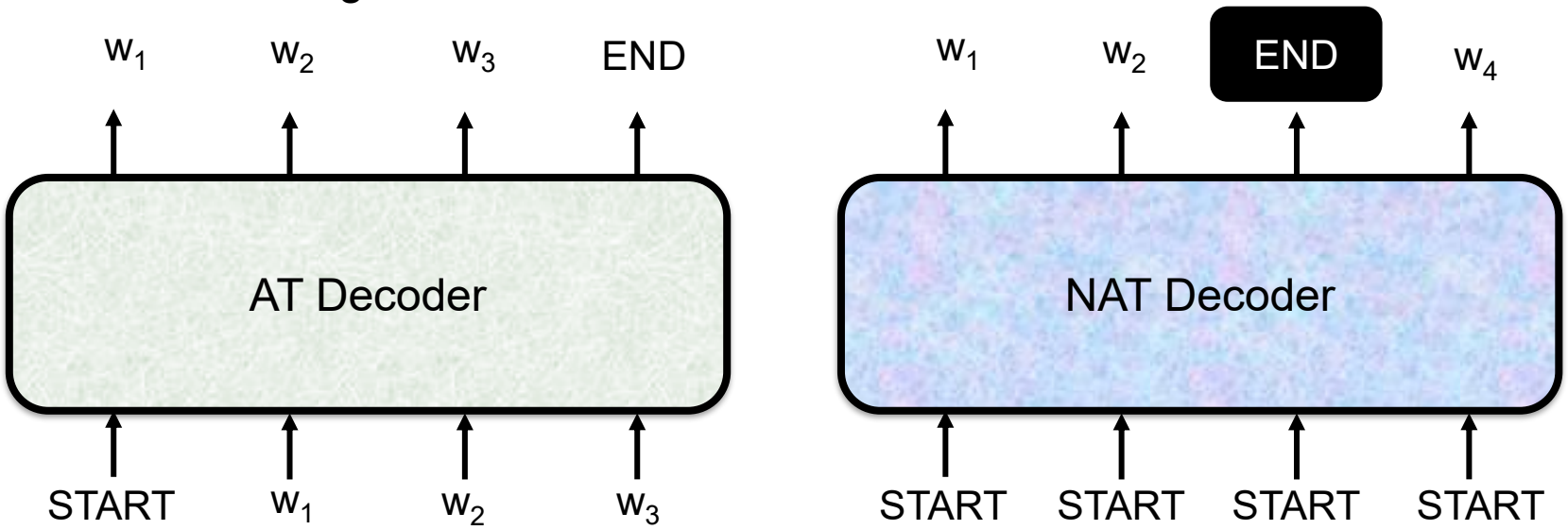

同时输出。应用场景：文字转语音

- How to decide the output length for NAT decoder?
  - Another predictor for output length
  - Output a very long sequence, ignore tokens after END
- Advantage: parallel, more stable generation (e.g., TTS)
- NAT is usually worse than AT

Source: https://speech.ee.ntu.edu.tw/~hylee/ml/2021-spring.php

Transformer – Decoder结构

Self-attention → masked attention

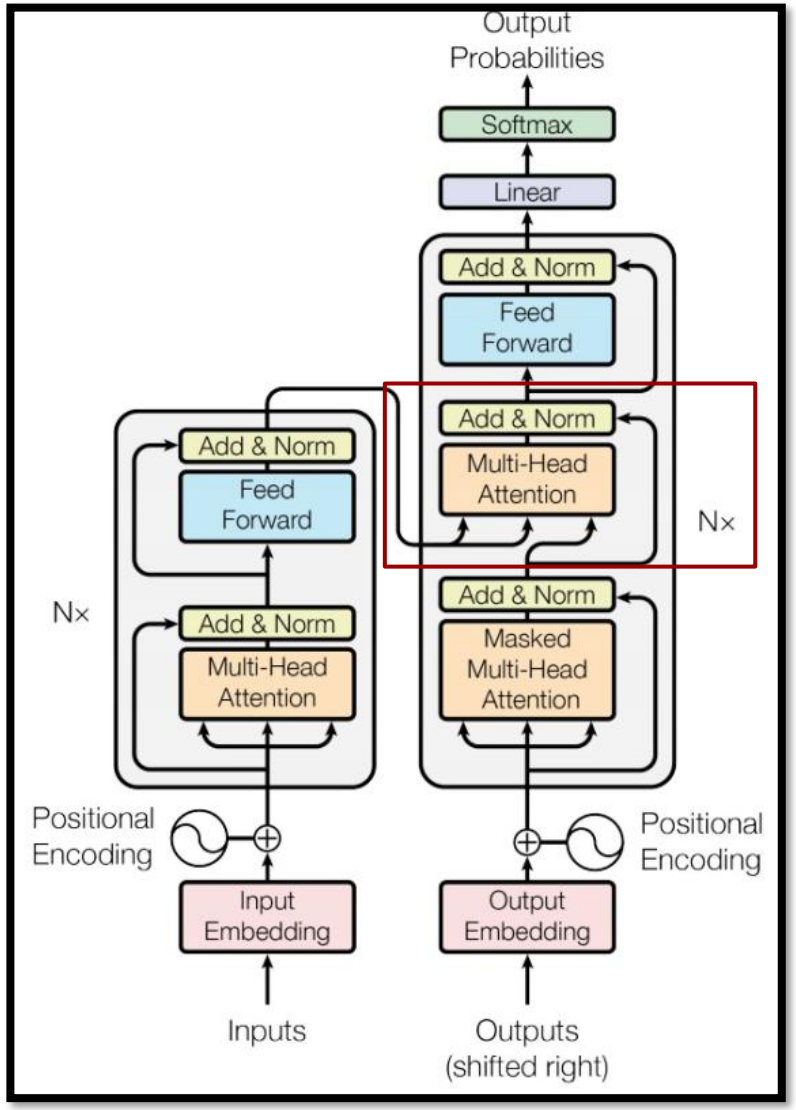

Cross-Attention机制允许Decoder根据当前解码位置的上下文信息，对Encoder中的所有输入进行加权聚合，以获取与当前解码位置相关的编码信息。这使得Decoder能够利用Encoder中的丰富上下文信息，更好地生成准确的输出序列。Cross-Attention在解码阶段帮助模型在生成每个输出元素时对上下文信息进行注入和利用。

在Decoder部分的编码器-解码器注意力机制（Encoder-Decoder Attention）中，Decoder部分的Query（q）是由前一个解码位置的输出得到的。Key和Value则是从Encoder部分的输出表示中计算得到的。 编码器-解码器注意力机制将Decoder部分的Query（q）与Encoder部分的Key（k）进行点积运算，并通过softmax归一化得到注意力权重，然后将这些权重与对应的Encoder部分的Value（v）进行加权求和，得到Decoder部分中与输入序列相关的表示。

https://blog.csdn.net/ding_programmer/article/details/133418031

Transformer – Decoder结构

Cross-attention

q有decoder提供，k有encoder提供，decoder从encoder里面拿信息

由decoder决定用什么信息

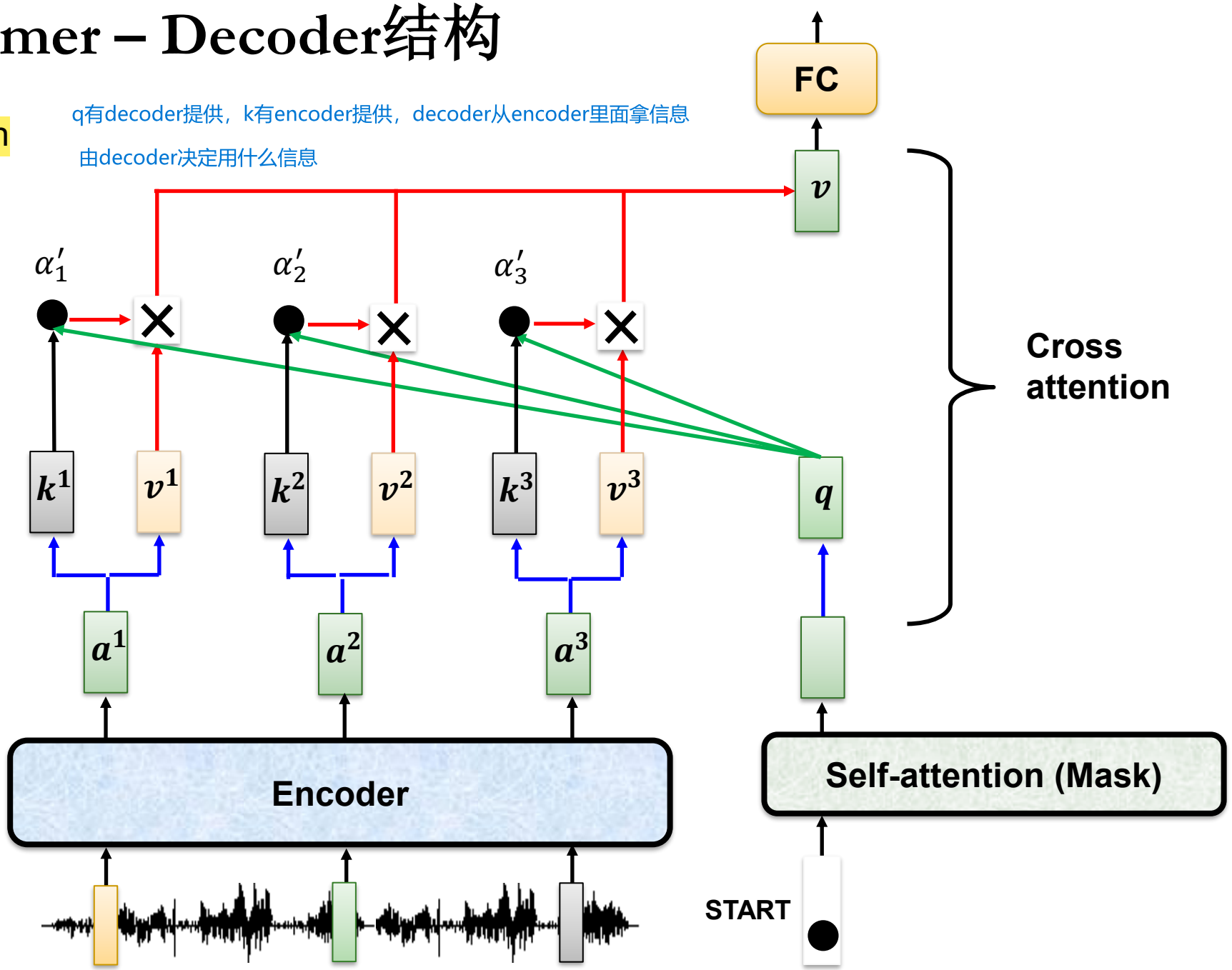

Transformer – Decoder结构

Cross-attention

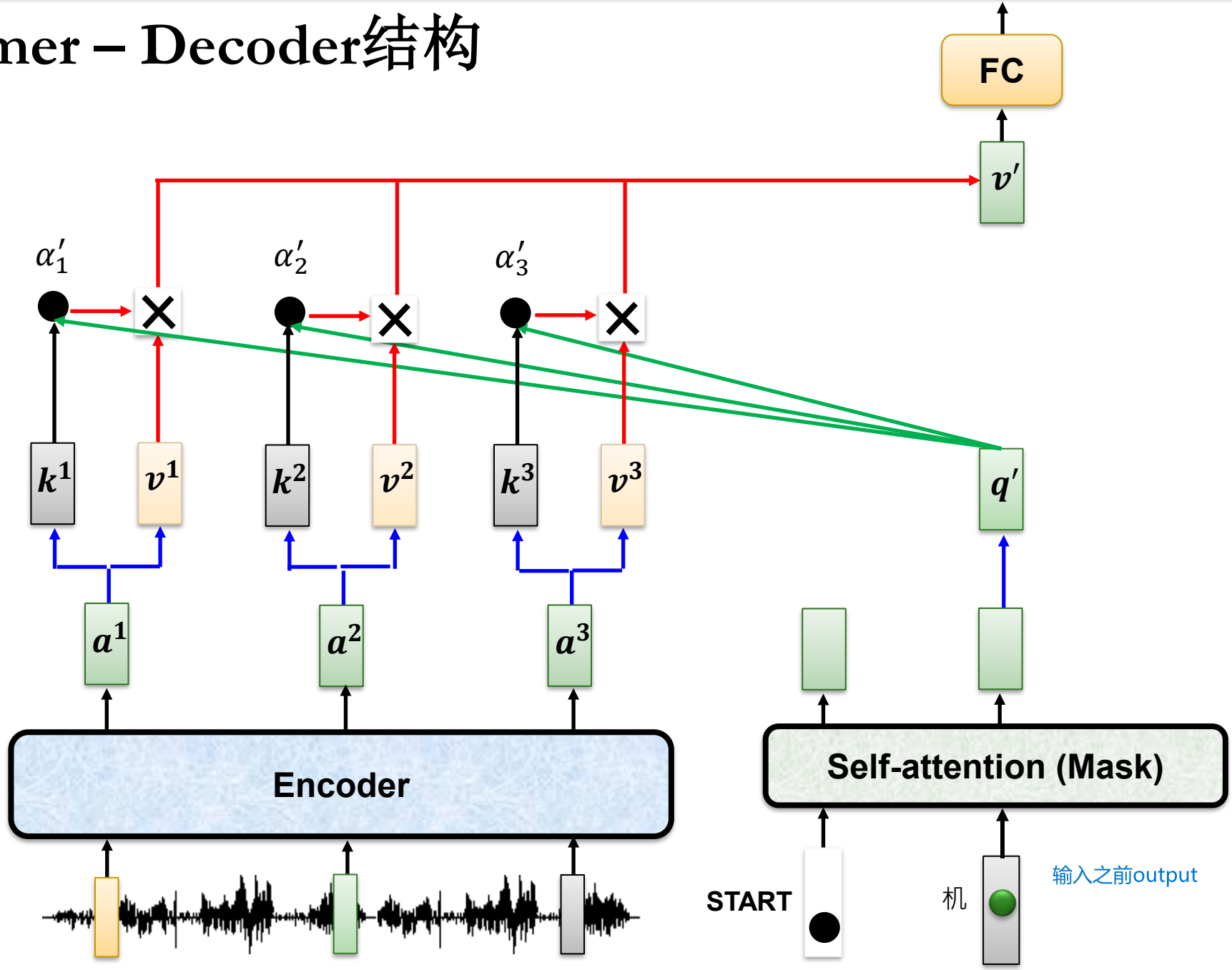

Transformer – Decoder结构

TransformerDecoder

CLASS torch.nn.TransformerDecoder(*decoder_layer*, *num_layers*, *norm=None*) [SOURCE]

TransformerDecoder is a stack of N decoder layers.

• NOTE

See this tutorial for an in depth discussion of the performant building blocks PyTorch offers for building your own transformer layers.

Parameters

- **decoder_layer** (*TransformerDecoderLayer*) – an instance of the TransformerDecoderLayer() class (required).
- **num_layers** (*int*) – the number of sub-decoder-layers in the decoder (required).
- **norm** (*Optional*[*Module*]) – the layer normalization component (optional).

Examples::

```
>>> decoder_layer = nn.TransformerDecoderLayer(d_model=512, nhead=8)
>>> transformer_decoder = nn.TransformerDecoder(decoder_layer, num_layers=6)
>>> memory = torch.rand(10, 32, 512)
>>> tgt = torch.rand(20, 32, 512)
>>> out = transformer_decoder(tgt, memory)
```

Transformer – Training

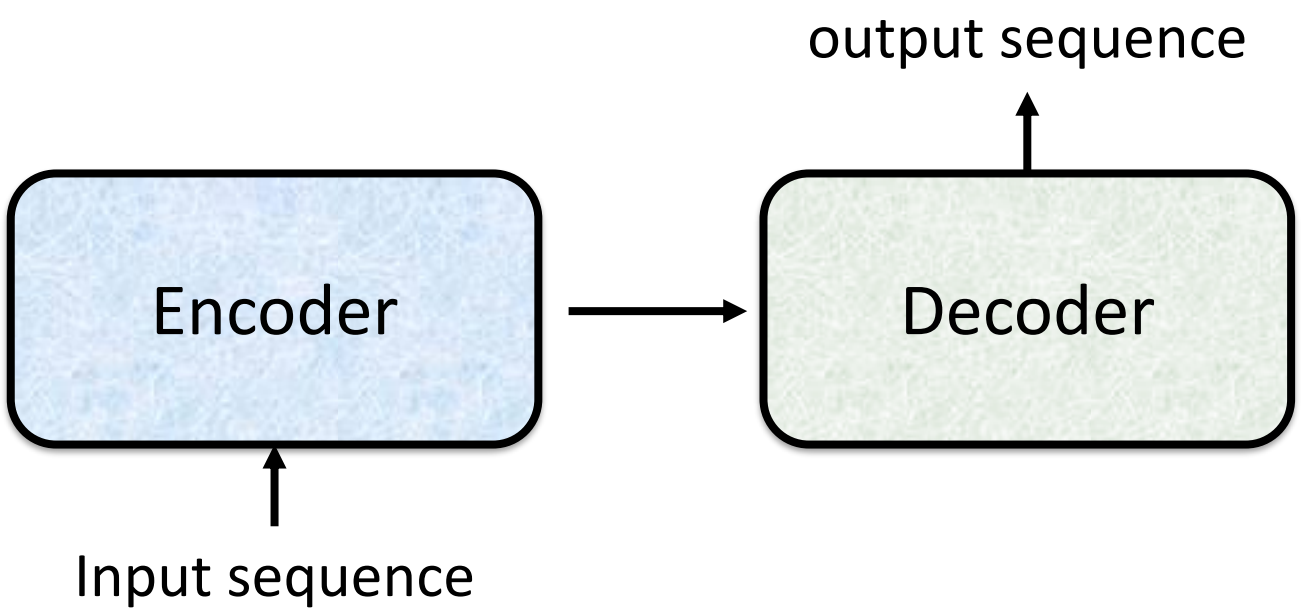

Source: https://speech.ee.ntu.edu.tw/~hylee/ml/2021-spring.php

Transformer – Training

梯度下降法

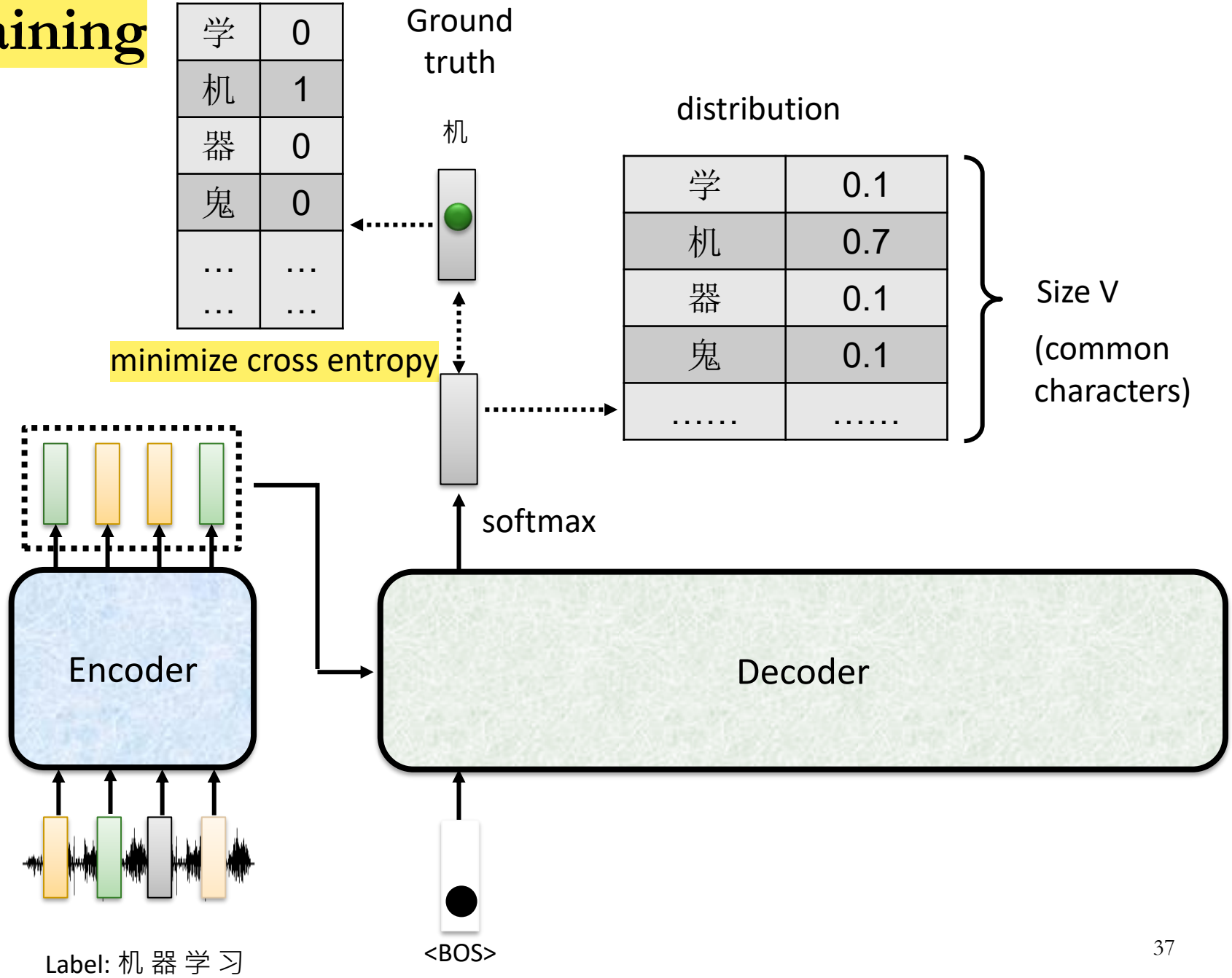

Transformer – Training

Teacher Forcing: using the ground truth as input.

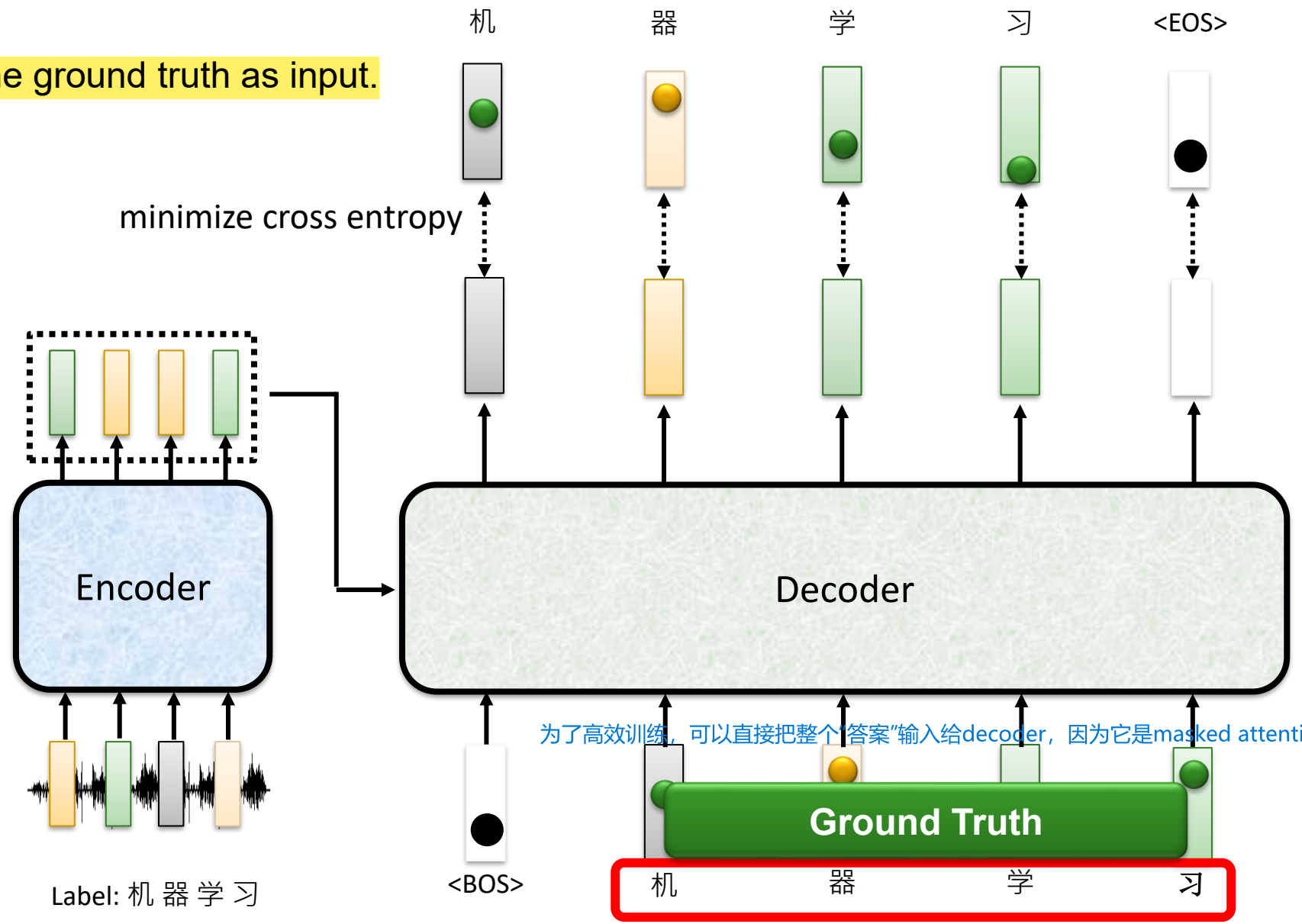

为了高效训练，可以直接把整个"答案"输入给decoder，因为它是masked attention，不会用到下文信息

Transformer – Training

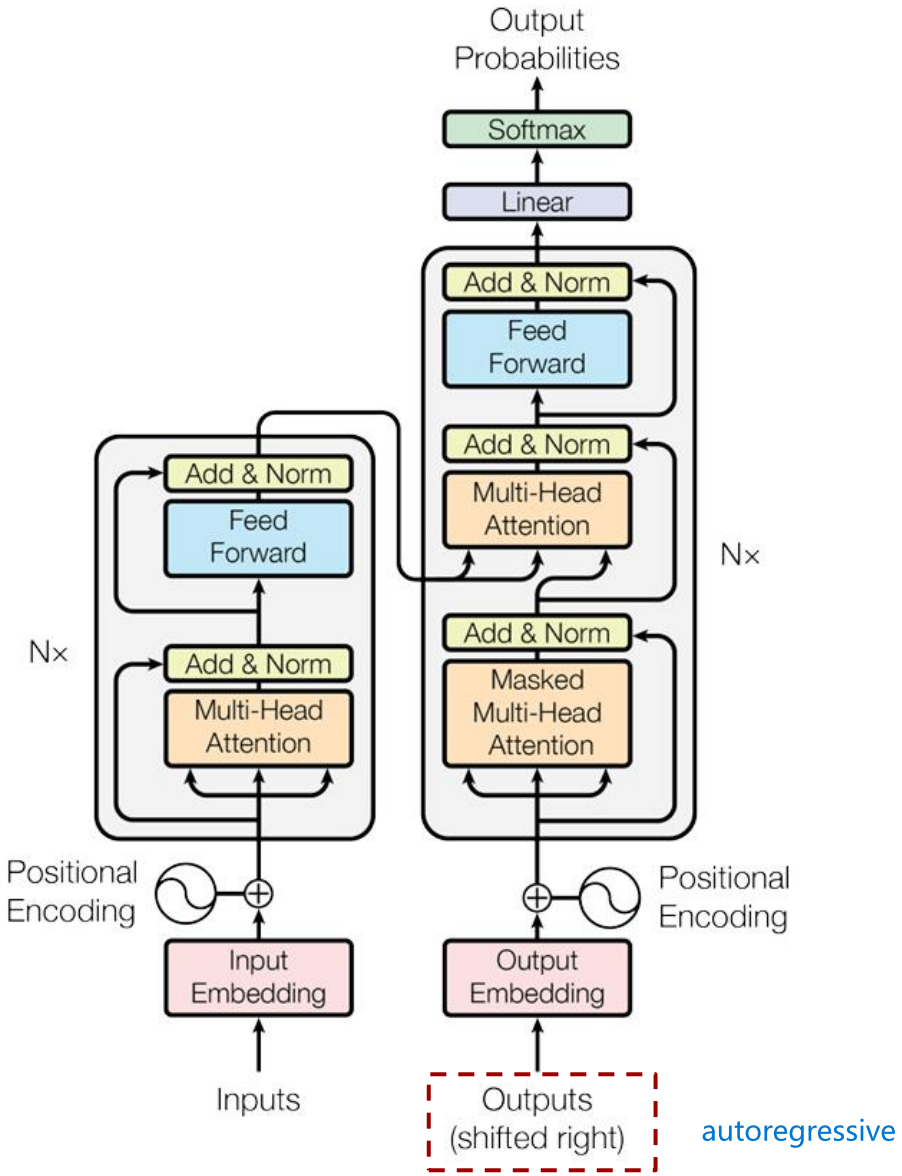

autoregressive

Transformer – Training

训练的时候都是在前面预测正确的条件下生成，实际中前面可能是错误的

There is a mismatch! ☹

exposure bias

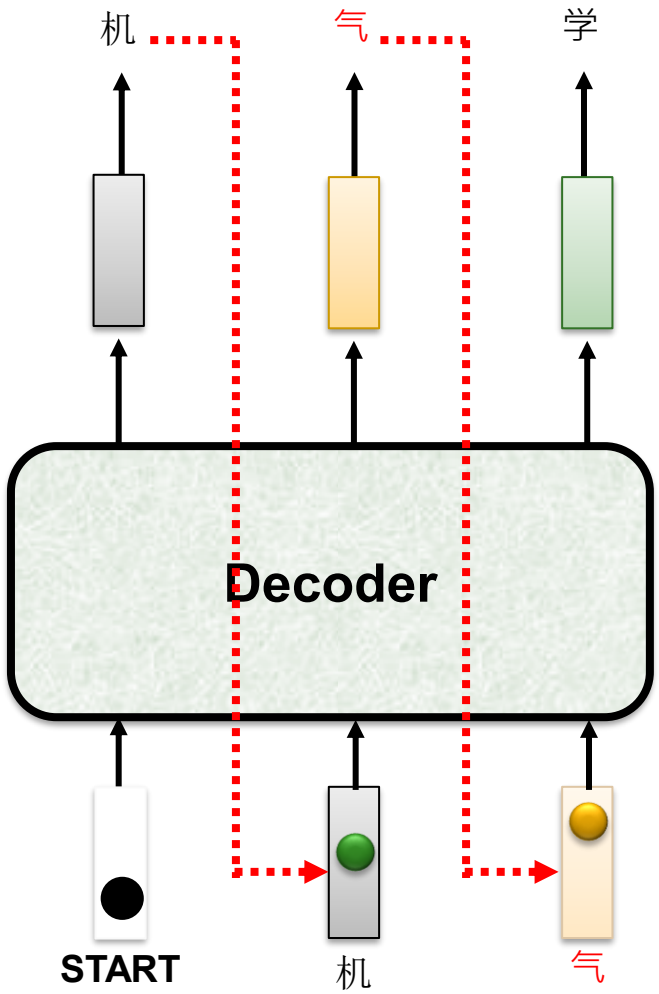

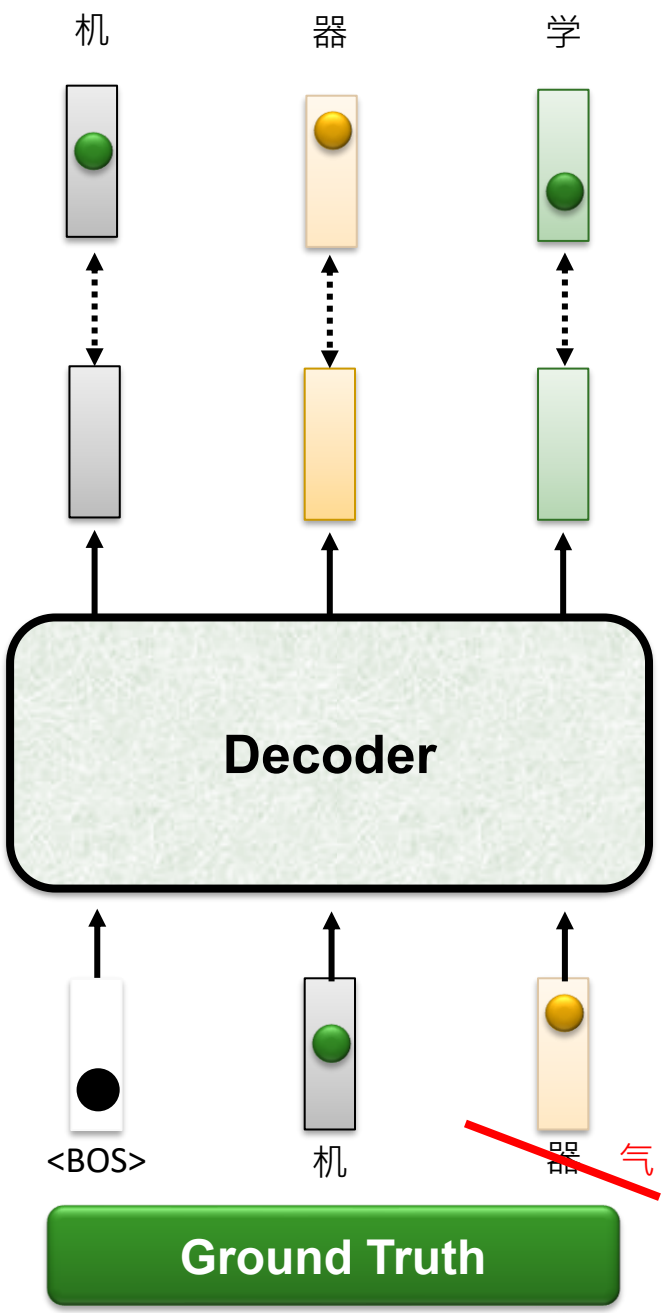

技巧：在训练的时候加一些噪声

Transformer – Training

Scheduled Sampling
拓展阅读，不要求理解

- Original Scheduled Sampling

  https://arxiv.org/abs/1506.03099

- Scheduled Sampling for Transformer

  https://arxiv.org/abs/1906.07651

- Parallel Scheduled Sampling

  https://arxiv.org/abs/1906.04331

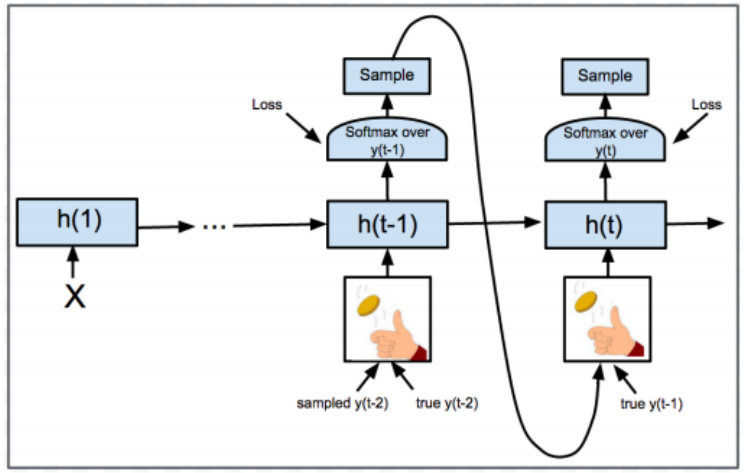

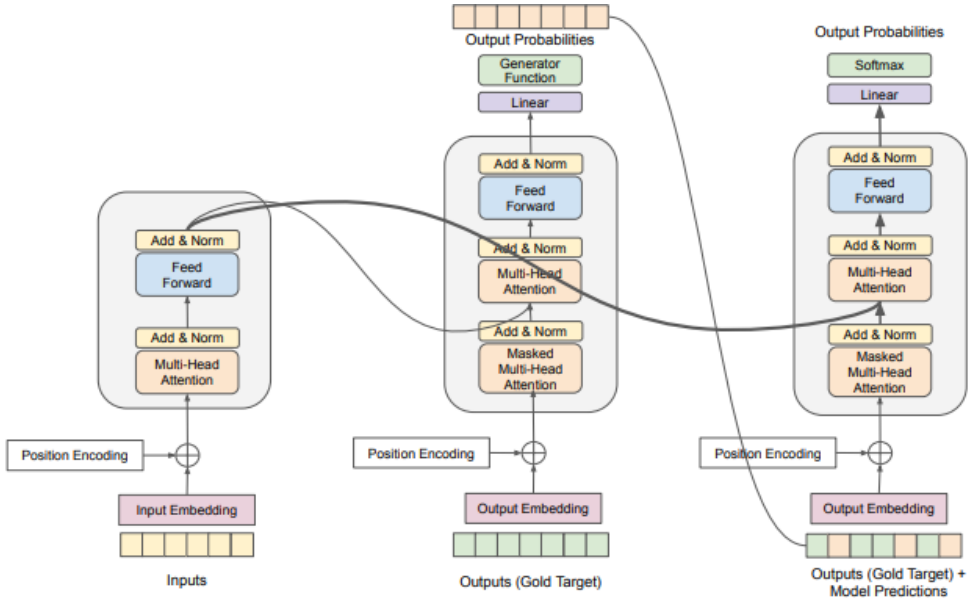

模型结构的选择

Self-attention 可能太复杂了。 复杂度n^2

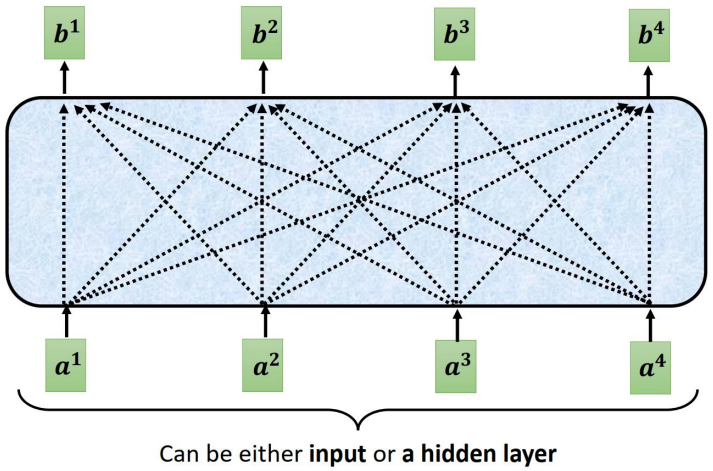

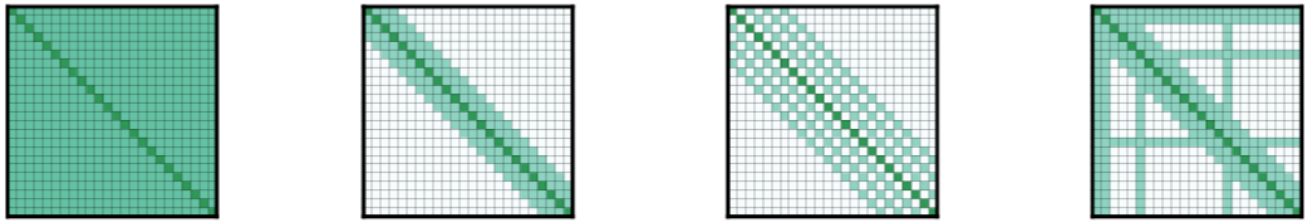

(a) Full n^2 attention (b) Sliding window attention (c) Dilated sliding window (d) Global+sliding window

Figure 2: Comparing the full self-attention pattern and the configuration of attention patterns in our Longformer.

模型结构的选择

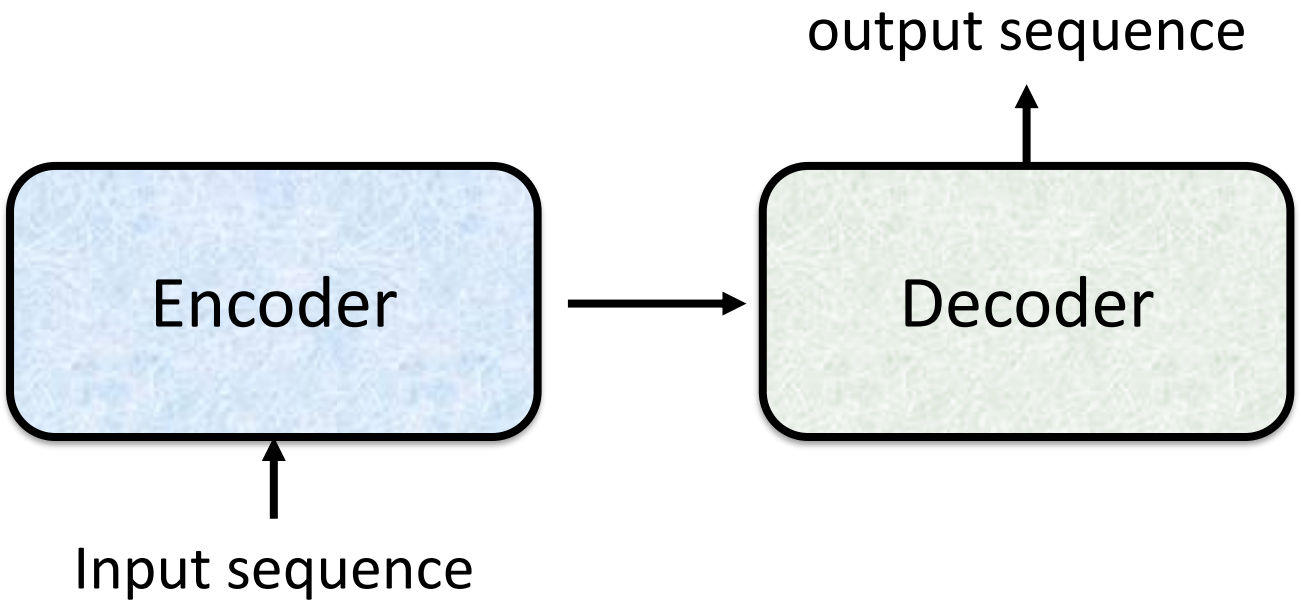

思考题：什么样的模型结构是最好的？

Encoder + Decoder

Encoder only? 擅长信息的处理 情感分类任务，使用encoder就足够了，bert就是encoder only

Decoder only? 擅长信息的选择 生成任务，gpt就是decoder only 预测股票，用decoder+cross-attention来做信息筛选

Q&A