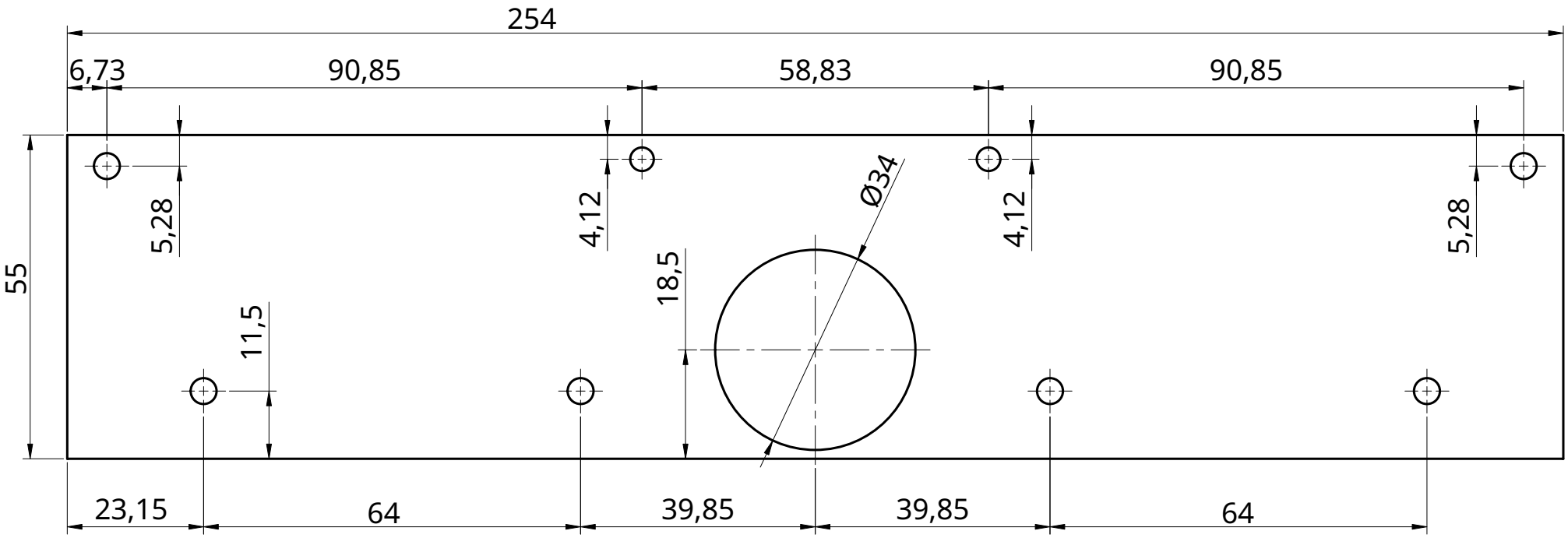

		NAME	SIGNATURE	DATE
UNLESS OTHERWISE SPECIFIED, DIMENSIONS ARE IN MILLIMETERS ANGULAR = ± ° SURFACE FINISH	DRAWN	JOSEF KERRES		2025-04-23
	CHECKED			
	APPROVED			
DO NOT SCALE DRAWING				
BREAK ALL SHARP EDGES AND REMOVE BURRS				
FIRST ANGLE PROJECTION	MATERIAL		FINISH	

TITLE
Open Source Rover
FH AACHEN
Top_Front_Back_Alu_3mm

SIZE	DWG NO.	REV.
A4		

SCALE	WEIGHT	SHEET
1:1		1 of 1