Details of mesoscopic Rydberg gate based on EIT

Han Wang[1]

[1]HKUST(GZ)

June 23, 2025

Abstract

The mapping process from data qubits to ancilla qubits in surface code is of great importance for quantum error correction(QEC). In this note, we intend to design a multi-qubit gate to perform one-step syndrome mapping from data qubits to ancilla qubit, which can eliminate the time required for quantum error correction process.

Keywords. EIT · dual species · multi-qubit gate · etc

AMS subject classification. 65M70, 65M12

1 Motivation

(i) In this work, we intend to design a multi-qubit CNOT gate for one-step syndrome mapping from data qubits to ancilla qubits in surface code.

1.1 Model

In surface code, we assume that there is an X-flip error happens in the data qubits, and the error information can be mapped to ancilla qubits through a multi-qubit CNOT_k gate with four control qubits and one target qubit in one plaquette.

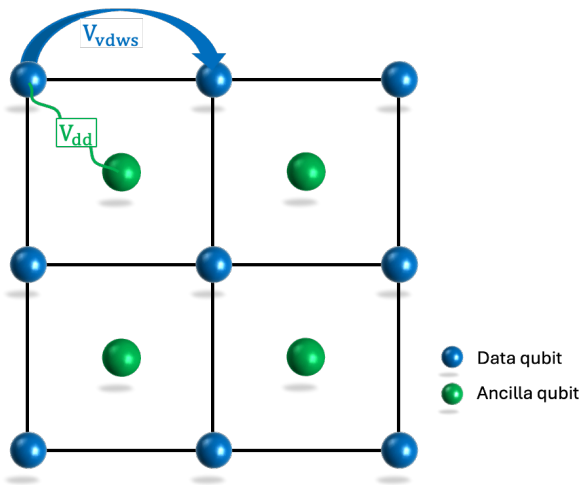

Within one plaquette, the four data qubits(Cs) are target qubits(Rb) and the ancilla qubit is the control qubit. The interaction strength satisfies the condition: $V_{\mathrm{dd}} \gg V_{\mathrm{Vdws}}$ so that the target qubits can only be blocked by the control qubit. The energy level of control qubits and target qubit are shown below:

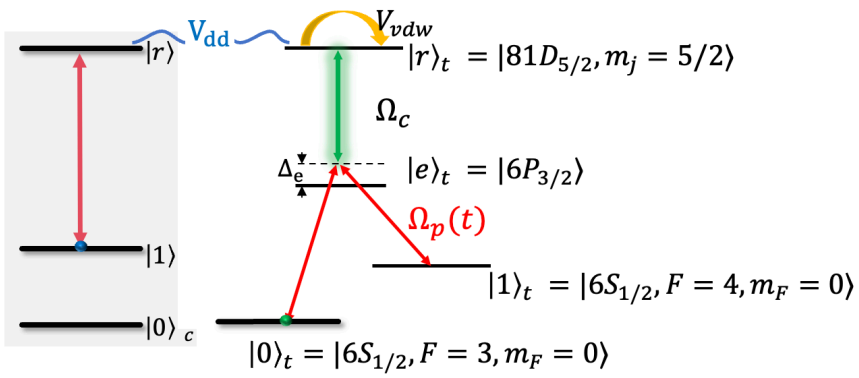

The mapping process can be described as follows. The multi-qubit gate shown above can be converted to a C_kNOT gate with four control qubits and one target qubit through simple transformation.

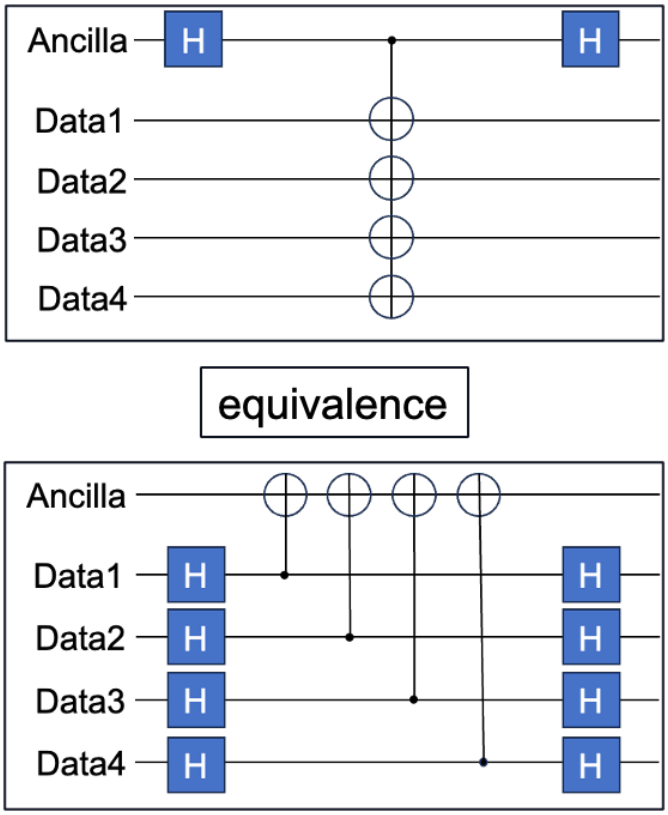

2 Literature Review

(i) mesoscopic Rydberg gate based on EIT:[1]

(ii) Experimental realization:[2], [3]

(iii) There is a scheme familiar to this work[4]

Bibliography

[1] C. Dlaska, K. Ender, G. B. Mbeng, A. Kruckenhauser, W. Lechner, and R. van Bijnen, "Quantum Optimization via Four-Body Rydberg Gates," *Phys. Rev. Lett.*, vol. 128, no. 12, p. 120503, Mar. 2022, doi: 10.1103/PhysRevLett.128.120503.

[2] C.-Y. Guo, L.-L. Yan, S. Zhang, S.-L. Su, and W. Li, "Optimized geometric quantum computation with a mesoscopic ensemble of Rydberg atoms," *Phys. Rev. A*, vol. 102, no. 4, p. 42607, Oct. 2020, doi: 10.1103/PhysRevA.102.042607.

[3] K. McDonnell, L. F. Keary, and J. D. Pritchard, "Demonstration of a Quantum Gate Using Electromagnetically Induced Transparency," *Phys. Rev. Lett.*, vol. 129, no. 20, p. 200501, Nov. 2022, doi: 10.1103/PhysRevLett.129.200501.

[4] A. M. Farouk, I. I. Beterov, P. Xu, S. Bergamini, and I. I. Ryabtsev, "Parallel Implementation of CNOTN and C2NOT2 Gates via Homonuclear and Heteronuclear Förster Interactions of Rydberg Atoms," *Photonics*, vol. 10, no. 11, 2023, doi: 10.3390/photonics10111280.