X-error correction model

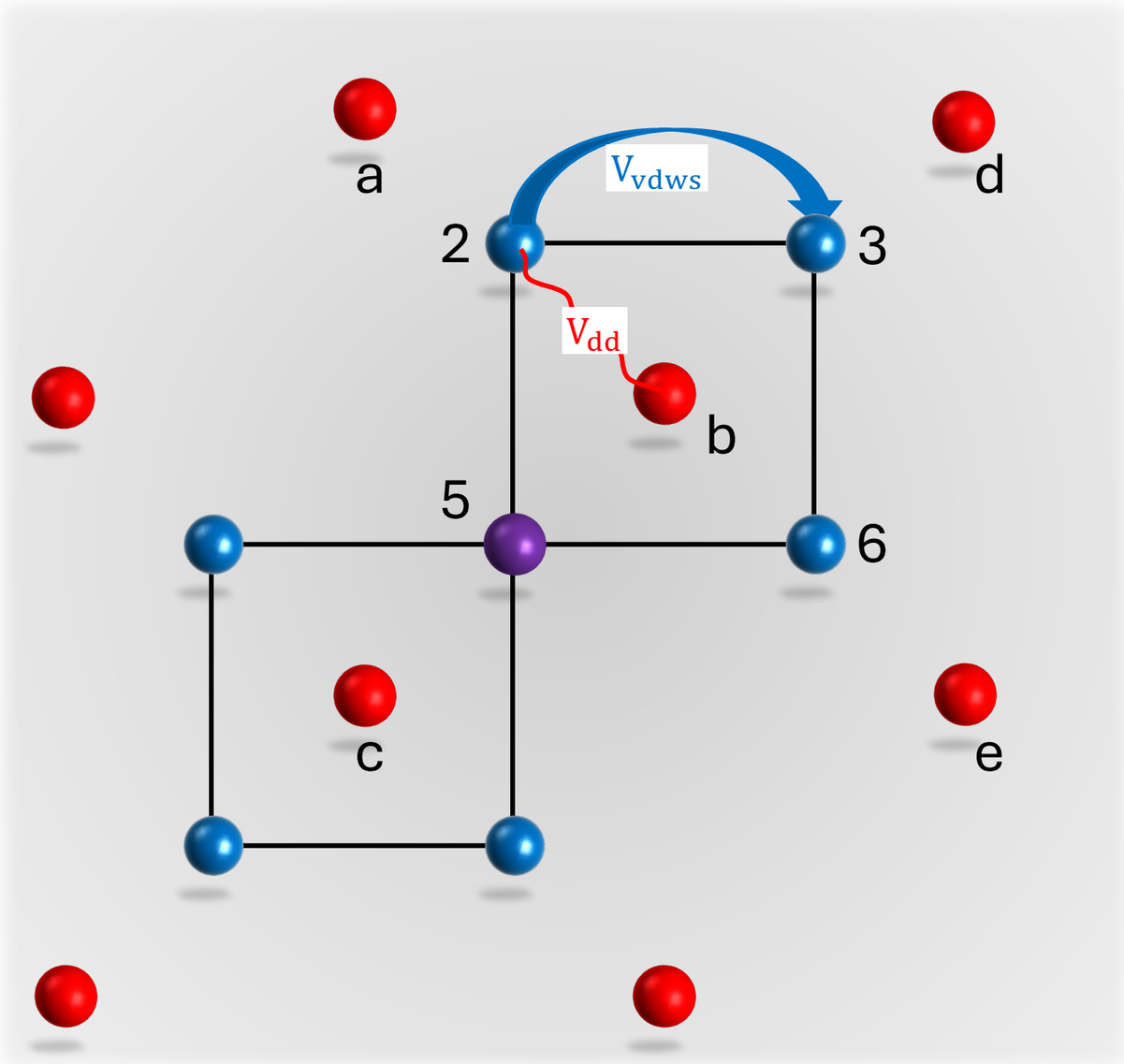

Conflicts under global pulse sequence

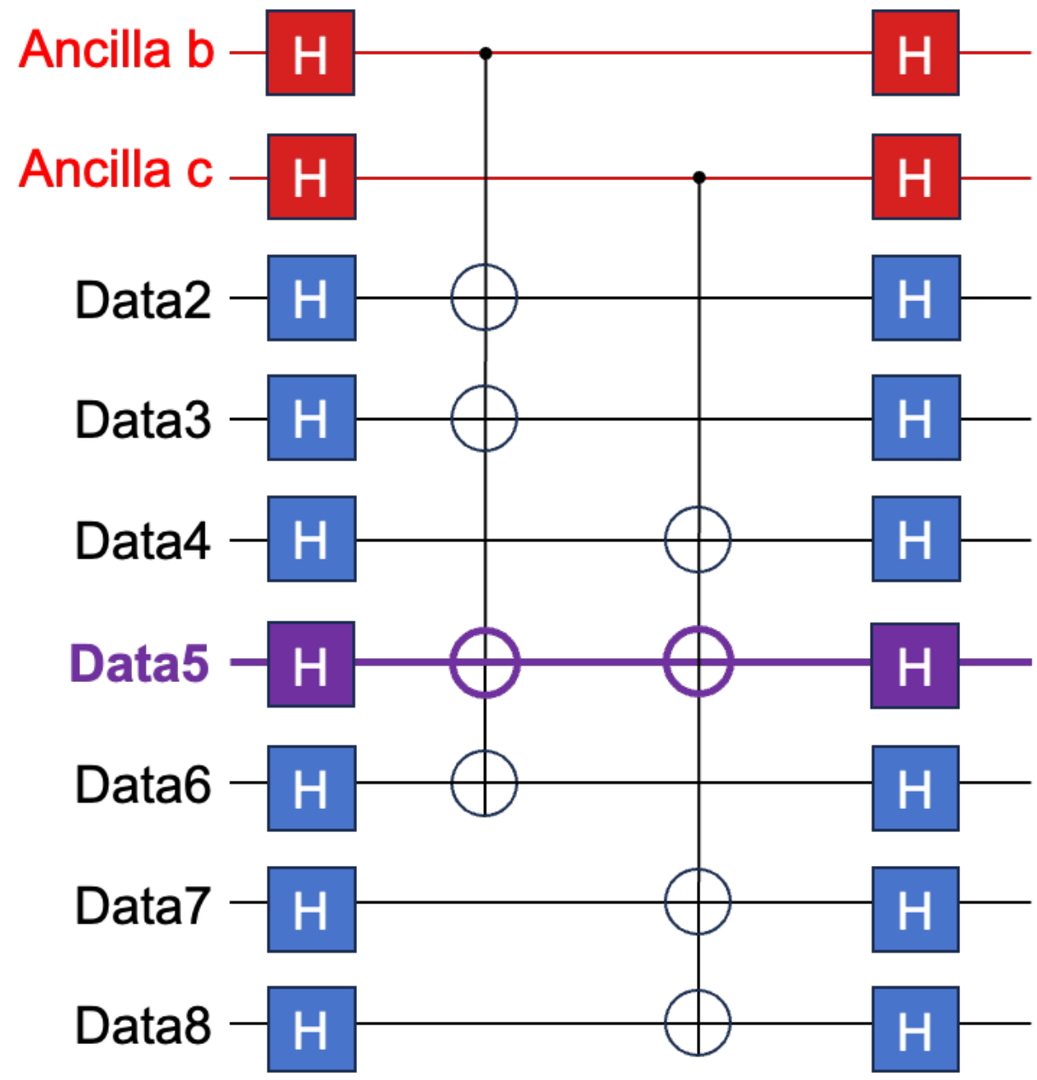
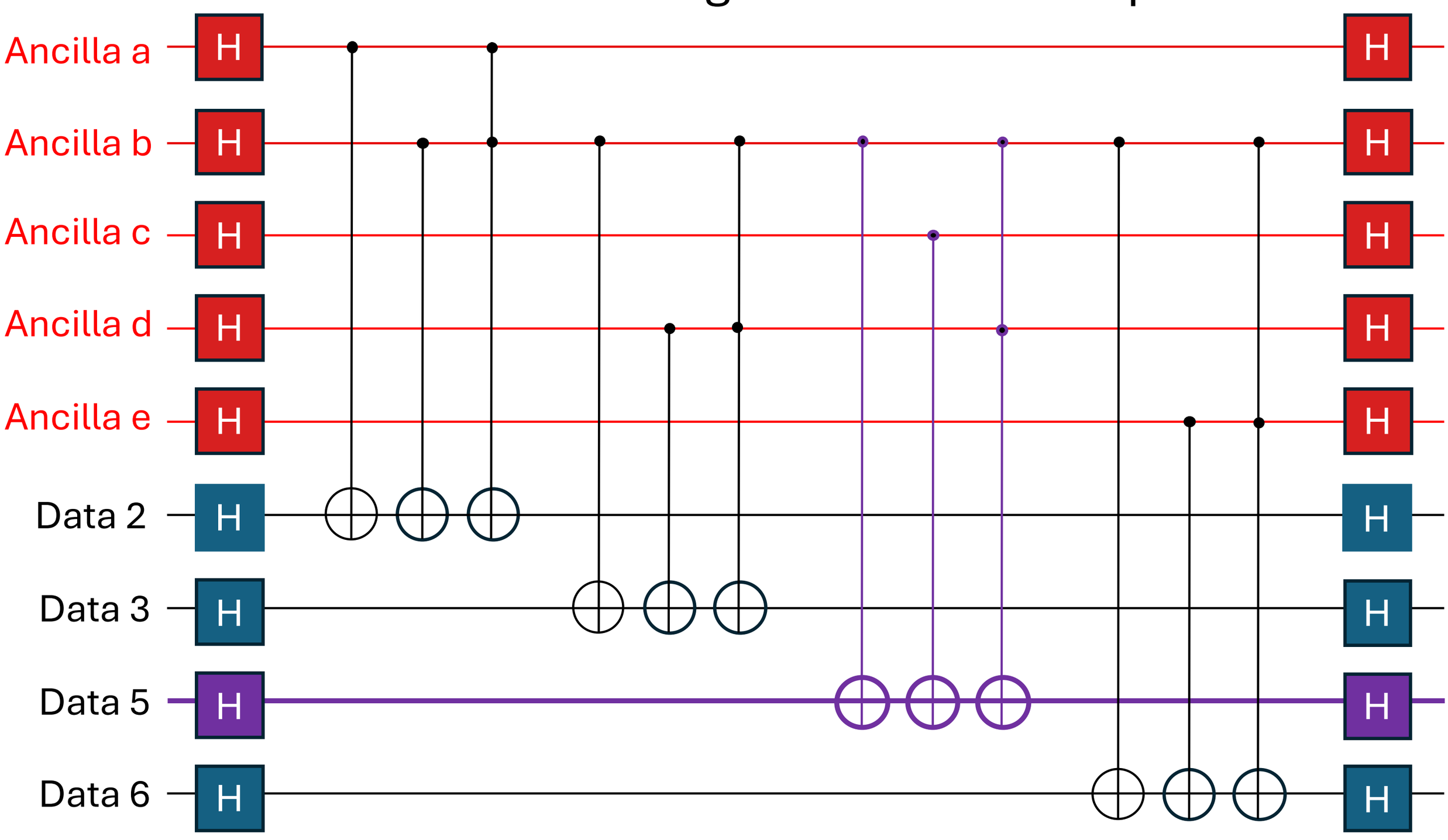
Revised circuit for global error check process