X-error correction model

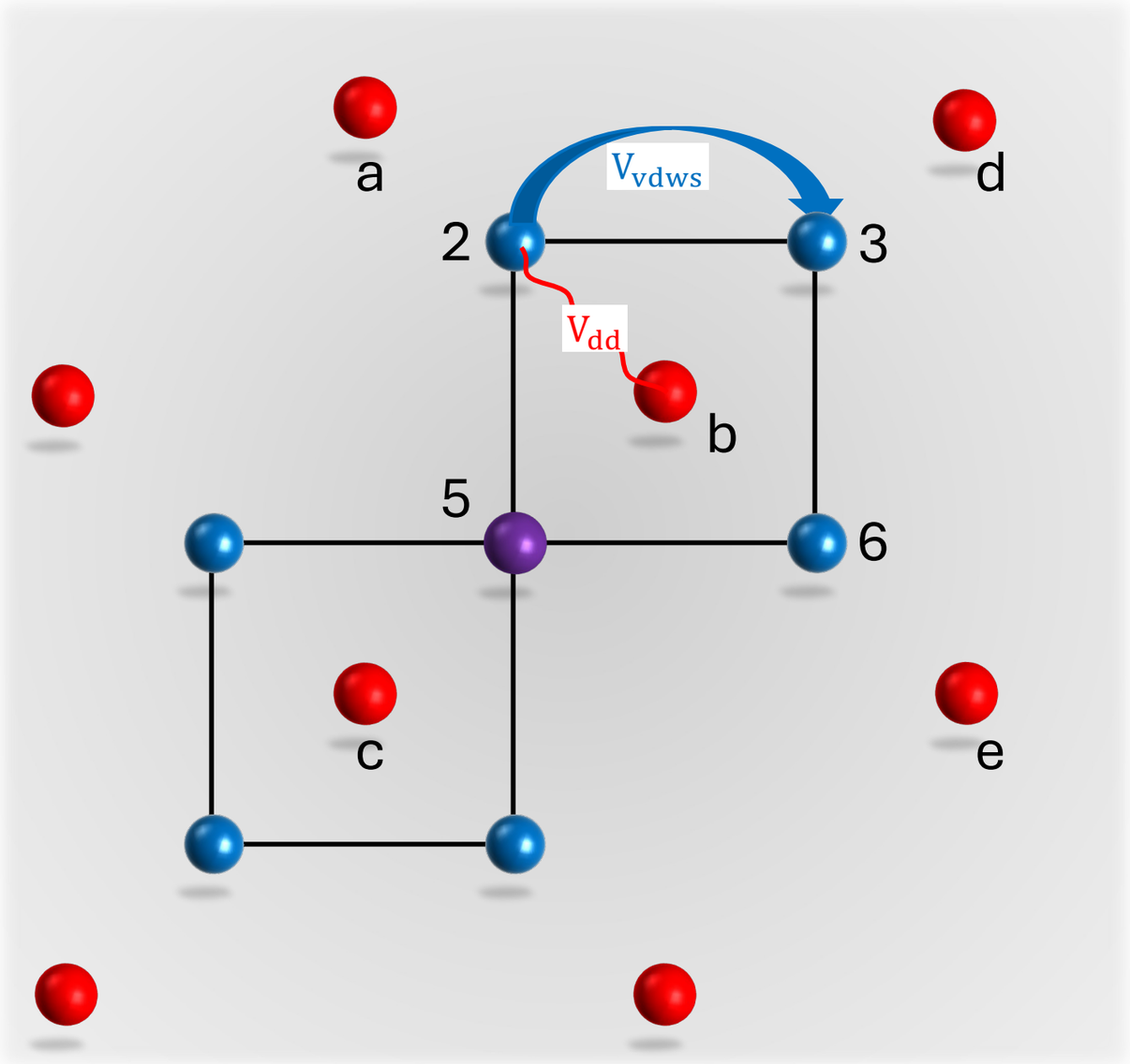
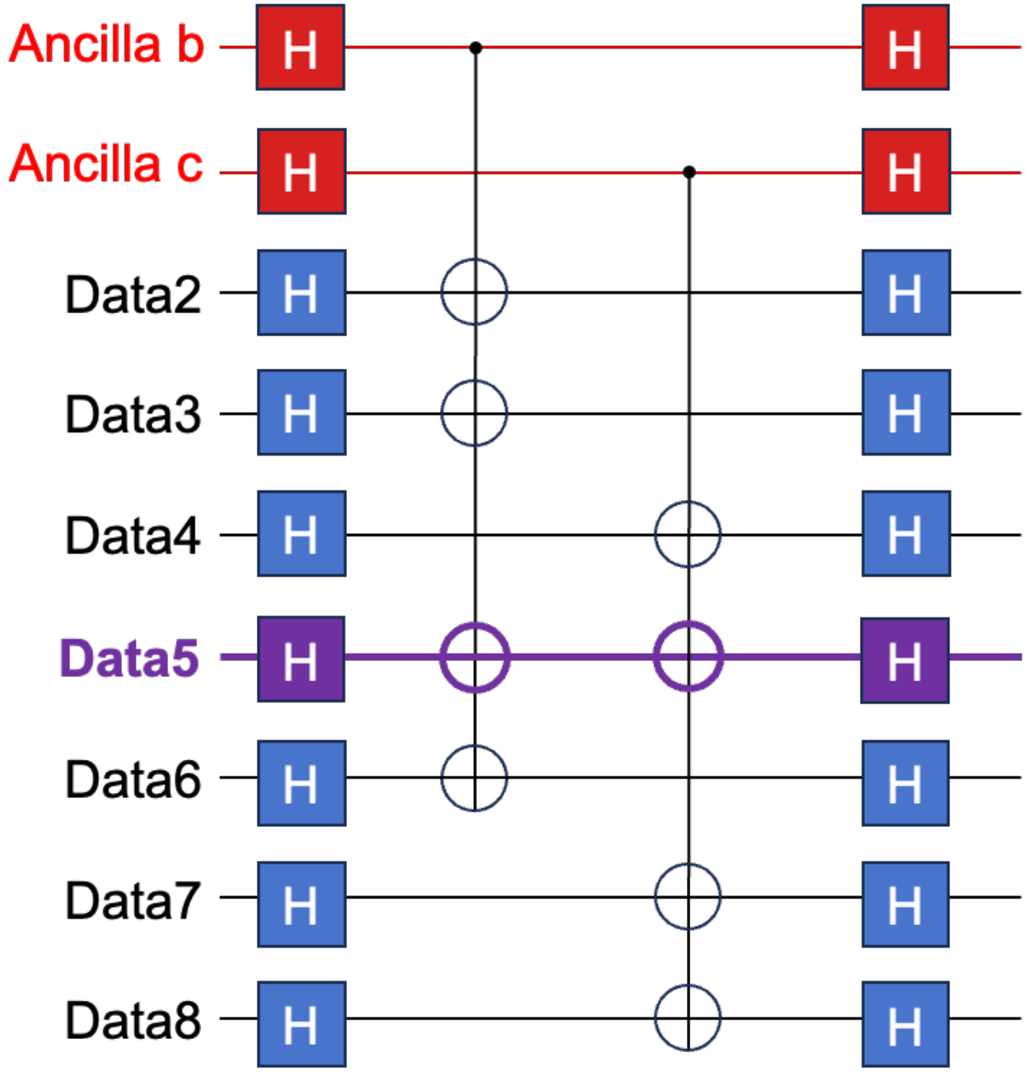
Conflicts under global pulse sequence