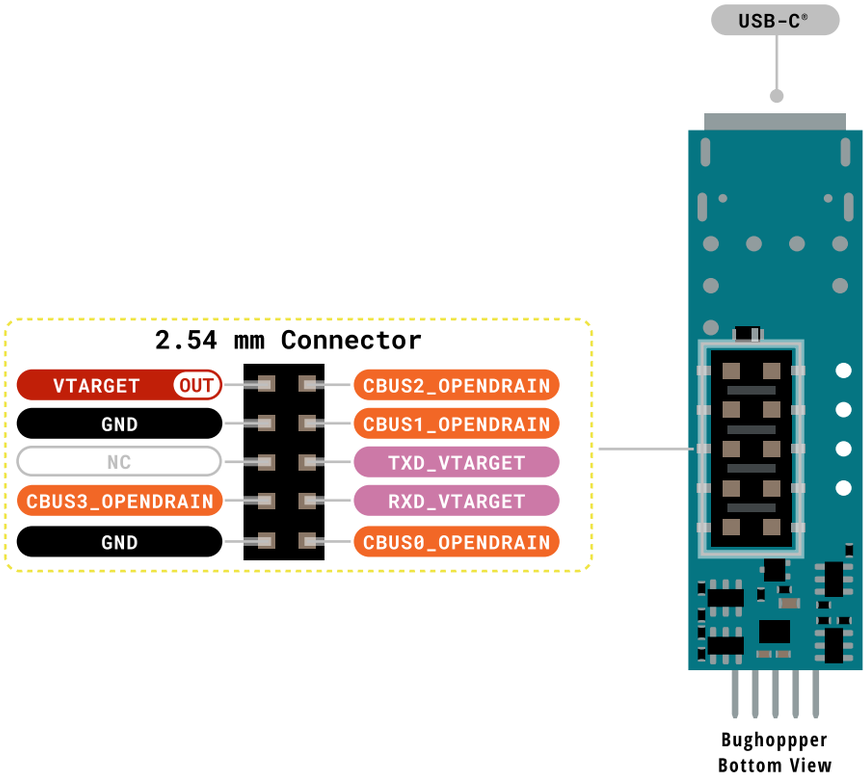

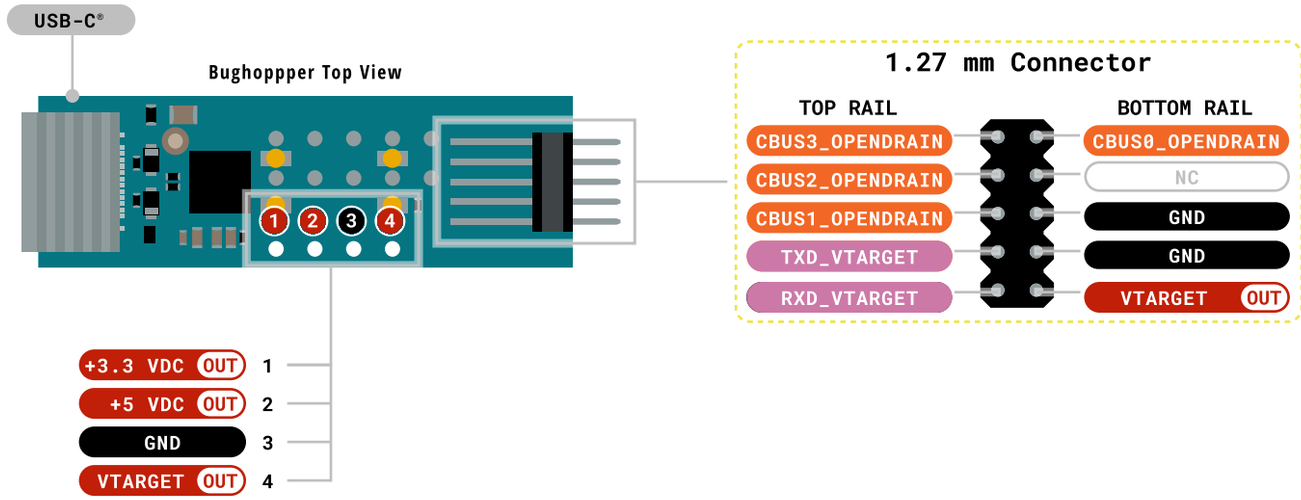

Legend:

- Digital
- Power
- UART
- Ground

ARDUINO

Bughopper
SKU Code: ABX00156
Pinout
Last update: 15 Mar, 2026