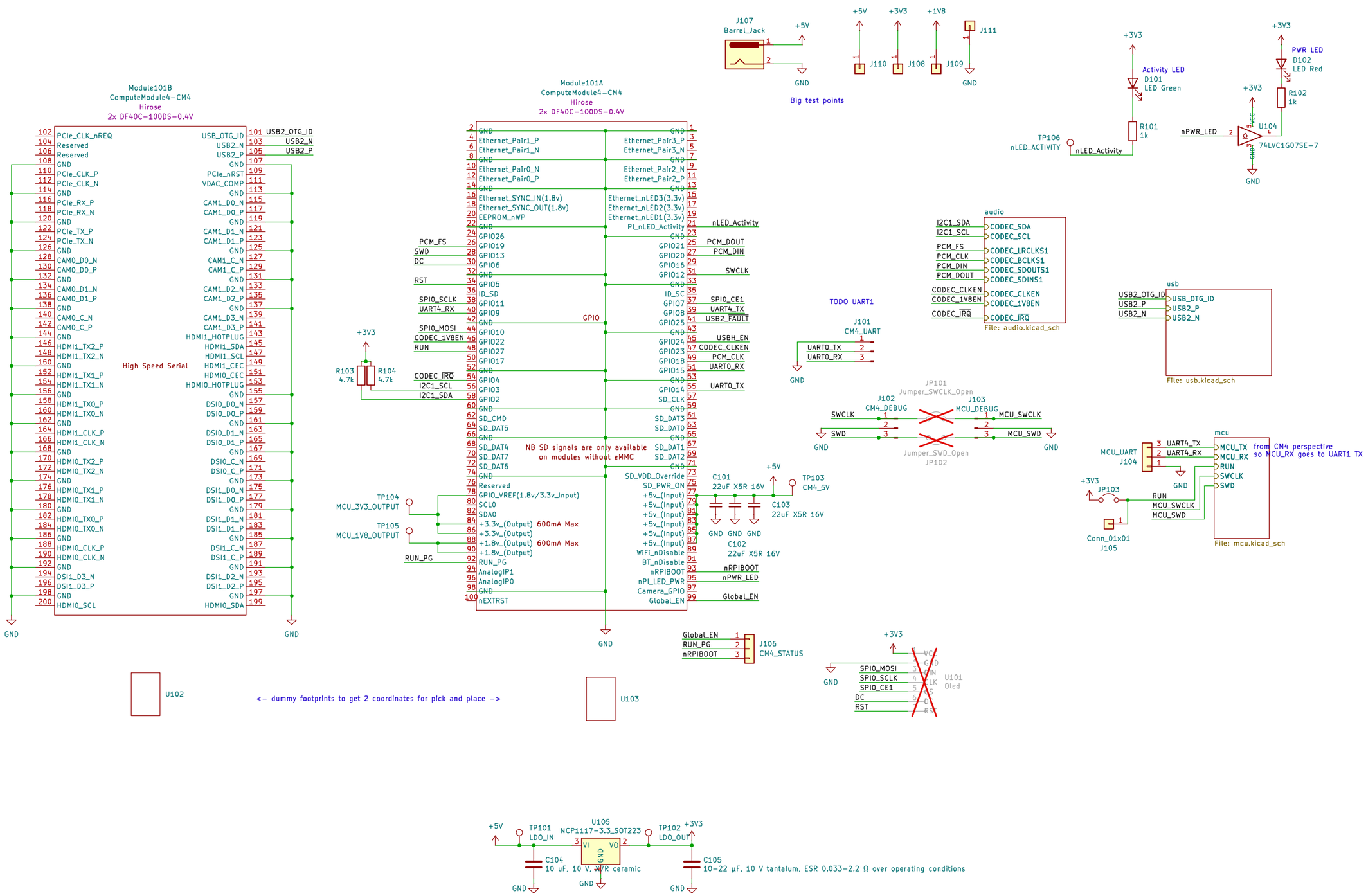
Module101B
ComputeModule4-CM4
Hirose
2x DF40C-100DS-0.4V
High Speed Serial
Module101A
ComputeModule4-CM4
Hirose
2x DF40C-100DS-0.4V
GPIO
NB SD signals are only available on modules without eMMC
600mA Max
600mA Max
J107
Barrel_Jack
Big test points
J110
J108
J109
J111
Activity LED
D101
LED Green
R101
1k
TP106
nLED_ACTIVITY
PWR LED
D102
LED Red
R102
1k
U104
74LVC1G07SE-7
nPWR_LED
audio
File: audio.kicad_sch
usb
File: usb.kicad_sch
TODO UART1
J101
CM4_UART
R103
4.7k
R104
4.7k
J102
CM4_DEBUG
J103
MCU_DEBUG
JP101
Jumper_SWCLK_Open
JP102
Jumper_SWD_Open
mcu
File: mcu.kicad_sch
from CM4 perspective so MCU_RX goes to UART1 TX
MCU_UART
J104
JP103
Conn_01x01
J105
C101
22uF X5R 16V
C102
22uF X5R 16V
C103
22uF X5R 16V
TP103
CM4_5V
TP104
MCU_3V3_OUTPUT
TP105
MCU_1V8_OUTPUT
J106
CM4_STATUS
U101
Oled
U102
U103
<- dummy footprints to get 2 coordinates for pick and place ->
U105
NCP1117-3.3_SOT223
TP101
LDO_IN
TP102
LDO_OUT
C104
10 uF, 10 V, X7R ceramic
C105
10-22 µF, 10 V tantalum, ESR 0.033-2.2 Ω over operating conditions

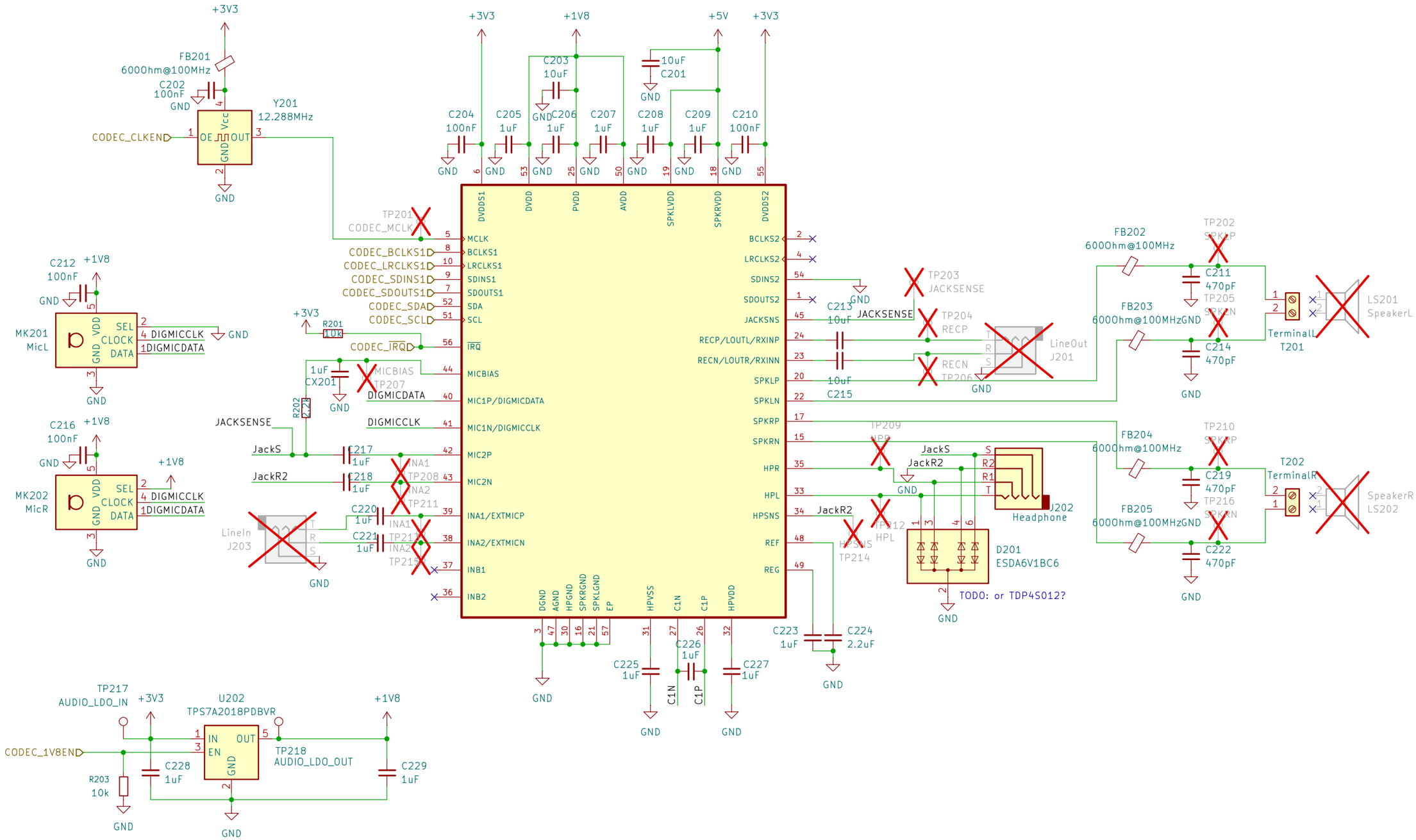
+3V3
FB201
600Ohm@100MHz
C202
100nF
GND
Y201
12.288MHz
CODEC_CLKEN
OE
OUT
Vcc
GND
+1V8
+5V
C203
10uF
C201
10uF
C204
100nF
C205
1uF
C206
1uF
C207
1uF
C208
1uF
C209
1uF
C210
100nF
TP201
CODEC_MCLK
CODEC_BCLKS1
CODEC_LRCLKS1
CODEC_SDINS1
CODEC_SDOUTS1
CODEC_SDA
CODEC_SCL
CODEC_IRQ
R201
10k
1uF
CX201
MICBIAS
TP207
DIGMICDATA
DIGMICCLK
R202
2.2k
JACKSENSE
JackS
JackR2
C217
1uF
C218
1uF
INA1
TP208
INA2
TP211
C220
1uF
C221
1uF
LineIn
J203
DVDDS1
DVDD
PVDD
AVDD
SPKLVDD
SPKRVDD
DVDDS2
MCLK
BCLKS1
LRCLKS1
SDINS1
SDOUTS1
SDA
SCL
IRQ
MICBIAS
MIC1P/DIGMICDATA
MIC1N/DIGMICCLK
MIC2P
MIC2N
INA1/EXTMICP
INA2/EXTMICN
INB1
INB2
BCLKS2
LRCLKS2
SDINS2
SDOUTS2
JACKSNS
RECP/LOUTL/RXINP
RECN/LOUTR/RXINN
SPKLP
SPKLN
SPKRP
SPKRN
HPR
HPL
HPSNS
REF
REG
DGND
AGND
HPGND
SPKRGND
SPKLGND
EP
HPVSS
C1N
C1P
HPVDD
C213
10uF
C215
10uF
TP203
JACKSENSE
TP204
RECP
RECN
TP206
LineOut
J201
TP209
HPR
TP212
HPL
TP214
HPSNS
J202
Headphone
D201
ESDA6V1BC6
TODO: or TDP4S012?
C223
1uF
C224
2.2uF
C225
1uF
C226
1uF
C227
1uF
FB202
600Ohm@100MHz
FB203
600Ohm@100MHz
FB204
600Ohm@100MHz
FB205
600Ohm@100MHz
TP202
SPKLP
TP205
SPKLN
TP210
SPKRP
TP216
SPKRN
C211
470pF
C214
470pF
C219
470pF
C222
470pF
Terminall
T201
T202
TerminalR
LS201
SpeakerL
SpeakerR
LS202
C212
100nF
MK201
MicL
SEL
CLOCK
DATA
DIGMICCLK
DIGMICDATA
C216
100nF
MK202
MicR
TP217
AUDIO_LDO_IN
U202
TPS7A2018PDBVR
IN
EN
OUT
CODEC_1V8EN
TP218
AUDIO_LDO_OUT
C228
1uF
C229
1uF
R203
10k

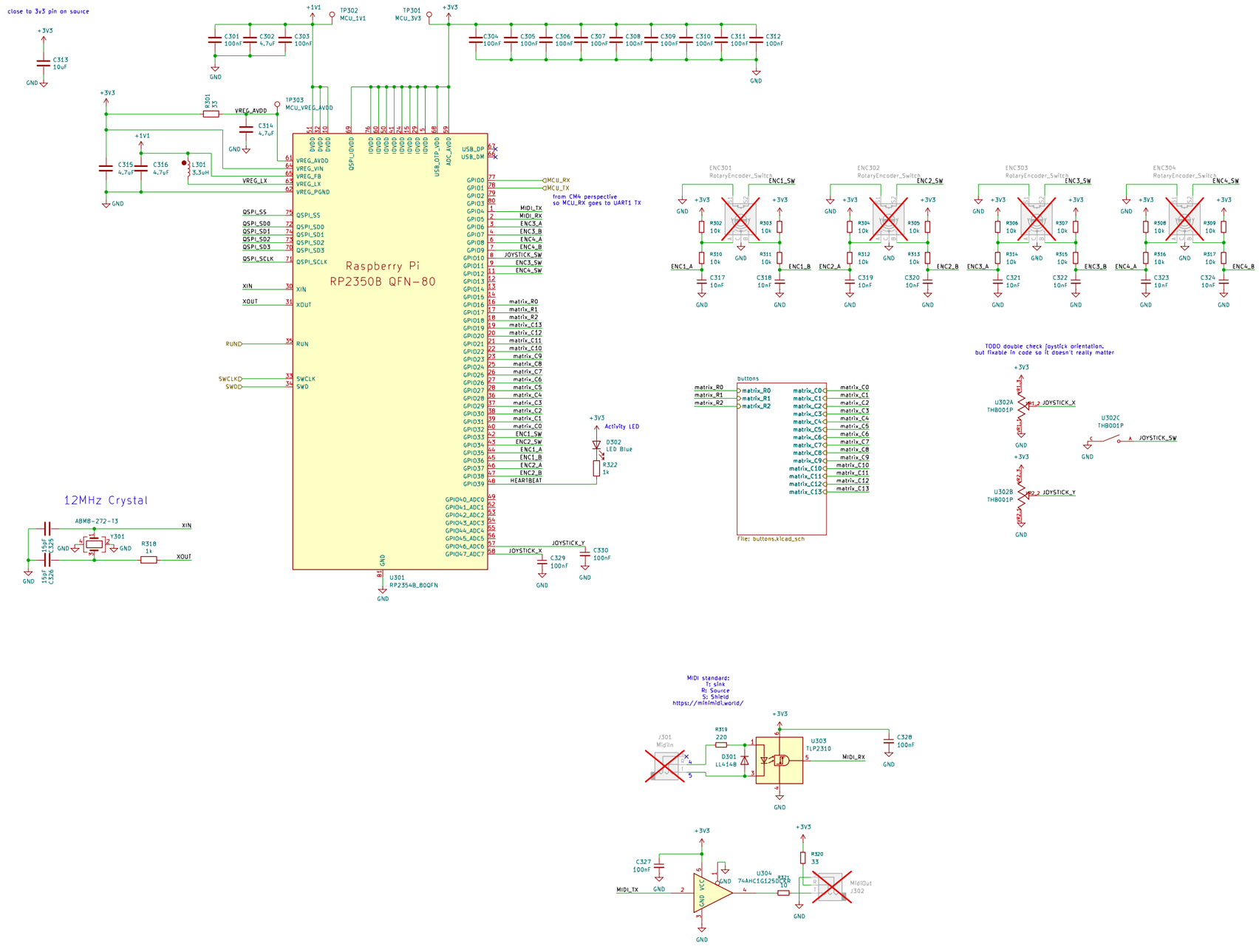
close to 3v3 pin on source
+3V3
C313 10uF
GND
+1V1
TP302 MCU_1V1
TP301 MCU_3V3
+3V3
C301 100nF
C302 4.7uF
C303 100nF
C304 100nF
C305 100nF
C306 100nF
C307 100nF
C308 100nF
C309 100nF
C310 100nF
C311 100nF
C312 100nF
R301 15
VREG_AVDD
TP303 MCU_VREG_AVDD
C314 4.7uF
C315 4.7uF
C316 4.7uF
L301 3.3uH
VREG_LX
Raspberry Pi
RP2350B QFN-80
U301
RP2354B_80QFN
QSPI_SS
QSPI_SD0
QSPI_SD1
QSPI_SD2
QSPI_SD3
QSPI_SCLK
XIN
XOUT
RUN
SWCLK
SWD
MCU_RX
MCU_TX
from CM4 perspective
so MCU_RX goes to UART1 TX
MIDI_TX
MIDI_RX
ENC3_A
ENC3_B
ENC4_A
ENC4_B
JOYSTICK_SW
ENC3_SW
ENC4_SW
matrix_R0
matrix_R1
matrix_R2
matrix_C13
matrix_C12
matrix_C11
matrix_C10
matrix_C9
matrix_C8
matrix_C7
matrix_C6
matrix_C5
matrix_C4
matrix_C3
matrix_C2
matrix_C1
matrix_C0
ENC1_SW
ENC2_SW
ENC1_A
ENC1_B
ENC2_A
ENC2_B
HEARTBEAT
Activity LED
D302 LED Blue
R322 1k
JOYSTICK_X
JOYSTICK_Y
C329 100nF
C330 100nF
12MHz Crystal
ABM8-272-13
Y301
R318 1k
C325 15pF
C326 15pF
ENC301 RotaryEncoder_Switch
ENC302 RotaryEncoder_Switch
ENC303 RotaryEncoder_Switch
ENC304 RotaryEncoder_Switch
R302 10k
R303 10k
R304 10k
R305 10k
R306 10k
R307 10k
R308 10k
R309 10k
R310 10k
R311 10k
R312 10k
R313 10k
R314 10k
R315 10k
R316 10k
R317 10k
C317 10nF
C318 10nF
C319 10nF
C320 10nF
C321 10nF
C322 10nF
C323 10nF
C324 10nF
ENC1_A
ENC1_B
ENC2_A
ENC2_B
ENC3_A
ENC3_B
ENC4_A
ENC4_B
buttons
File: buttons.kicad_sch
TODO double check joystick orientation,
but fixable in code so it doesn't really matter
U302A THB001P
U302B THB001P
U302C THB001P
JOYSTICK_X
JOYSTICK_Y
JOYSTICK_SW
MIDI standard:
T: sink
R: Source
S: Shield
https://minimidi.world/
J301 MidiIn
R319 220
D301 LL4148
U303 TLP2310
C328 100nF
MIDI_RX
C327 100nF
U304 74AHC1G125DCKR
R321 10
R320 33
J302 MidiOut

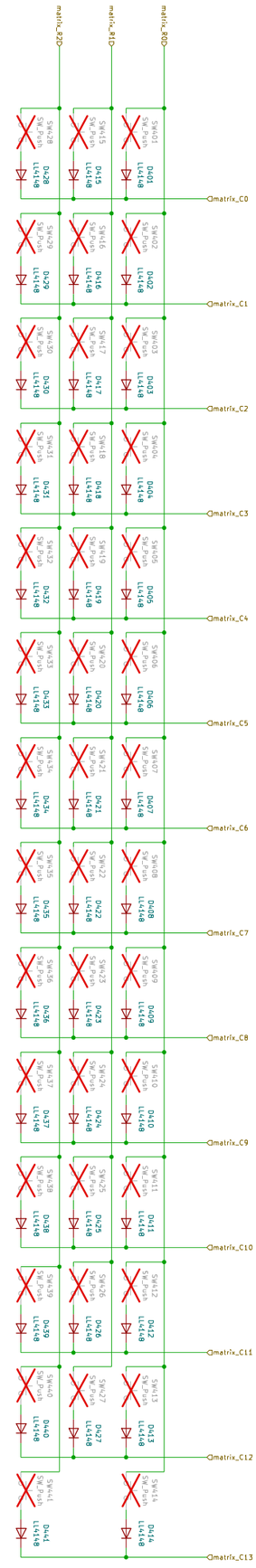
matrix_R0
matrix_R1
matrix_R2
SW401
SW_Push
D401
LL4148
SW402
D402
SW403
D403
SW404
D404
SW405
D405
SW406
D406
SW407
D407
SW408
D408
SW409
D409
SW410
D410
SW411
D411
SW412
D412
SW413
D413
SW414
D414
SW415
D415
SW416
D416
SW417
D417
SW418
D418
SW419
D419
SW420
D420
SW421
D421
SW422
D422
SW423
D423
SW424
D424
SW425
D425
SW426
D426
SW427
D427
SW428
D428
SW429
D429
SW430
D430
SW431
D431
SW432
D432
SW433
D433
SW434
D434
SW435
D435
SW436
D436
SW437
D437
SW438
D438
SW439
D439
SW440
D440
SW441
D441
matrix_C0
matrix_C1
matrix_C2
matrix_C3
matrix_C4
matrix_C5
matrix_C6
matrix_C7
matrix_C8
matrix_C9
matrix_C10
matrix_C11
matrix_C12
matrix_C13

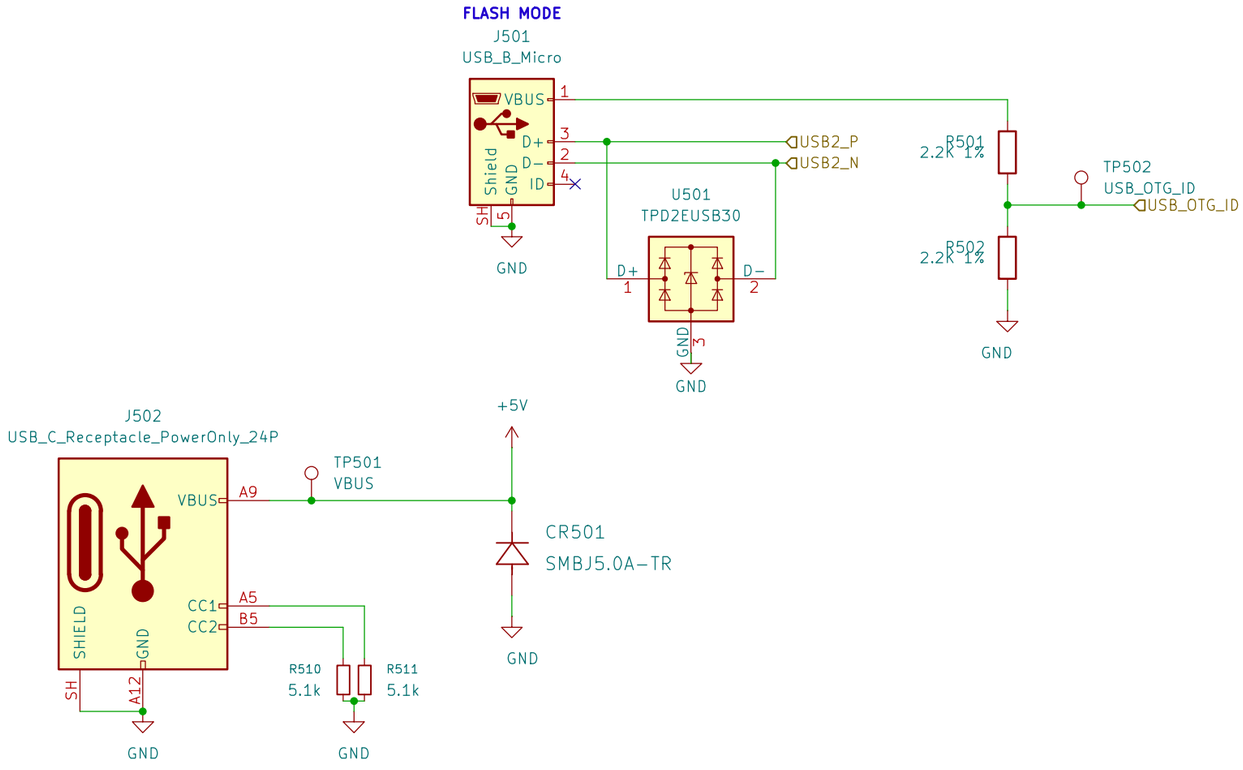
FLASH MODE
J501
USB_B_Micro
VBUS
D+
D−
ID
GND
Shield
SH
USB2_P
USB2_N
U501
TPD2EUSB30
R501
2.2k 1%
R502
2.2k 1%
TP502
USB_OTG_ID
J502
USB_C_Receptacle_PowerOnly_24P
TP501
VBUS
A9
A5
B5
CC1
CC2
SHIELD
A12
+5V
CR501
SMBJ5.0A-TR
R510
5.1k
R511
5.1k