Envicool

Ultra-thin Dehumidifier Series

超薄款除湿空调系列

User Manual

用户手册

深圳市英维克科技股份有限公司

Shenzhen Envicool Technology Co., Ltd.

Foreword

Overview

To help users to learn about the use and maintenance of this HVAC, this document mainly introduces this Ultra-thin Dehumidifier HVAC in terms of its overview, installation, controller operation, routine maintenance and failure management.

Intended Readers

This document is intended for the readers as follows:

- Installation engineer of this product
- Technical support engineer
- After-sales maintenance engineer

Symbol Conventions

The symbols that may be found in this document are defined in the following table.

Symbol	Description
Danger	Warns of a critically hazardous situation, which may result in death or serious personal injury if the requirements are not followed.
Warning	Warns of a potentially dangerous situation, which may result in moderate or minor personal injury if the requirements are not followed.
Notice	Warn of scenarios that affect equipment safety or environmental safety. Failure to comply with the requirements may cause damage to equipment or other adverse results.
Statement	Prompts for some general details, or other useful information to simplify the work.

Revision Record

Revision record accumulates the descriptions of each revision of the document. The latest document issued contains all the revisions made in earlier versions.

Version	Revision	Revise Date
A1	Initial release.	03212024
A2	Calibration parameter of dehumidification capacity is updated, while the precautions of PU tube connection are added.	05072024
A3	Logic optimization is added.	07262024

Contents

Foreword 2
Contents 3
1 Safety Precautions 4
2 Product Description 7
2.1 Features 7
2.1.1 Product Introduction 7
2.1.2 Function Description 8
2.2 Implementation 8
2.2.1 System Principle 8
2.2.2 Air Duct Design 9
2.2.3 Control Logic 9
2.3 Specification 12
3 Installation Guidance 13
3.1 Installation Instruction 13
3.1.1 Transporting and Moving 13
3.1.2 Installation Environment 13
3.1.3 Installation Layout 13
3.2 Installation and Preparation 14
3.2.1 Unpacking and Examination 14
3.2.2 Tools Preparation 14
3.3 Mechanical Installation 15
3.4 Electrical Connection 15
4 Routine Maintenance 18
4.1 Overview 18
4.2 Chiller Appearance Maintenance 18
4.3 Fan Maintenance 18
4.4 Electrical Control System Maintenance 20
4.5 Condenser Maintenance 20
5 Failure Management 21
5.1 Fan Failure 21
5.2 Cooling System Failure 21
5.3 Components Replacement 22
5.3.1 Replace Water Coil Cooling Fan 22
5.3.2 Replacing Inner Circulation Fan (Dehumidifying Fan) 22
5.3.3 Replacing Electric Control Components .. 23
5.3.4 Replacing Compressor 24
5.4 Alarm Handling 24
6 Reference 26

1 Safety Precautions

Please read this chapter carefully before carrying out assembly, installation, electrical engineering and maintenance operations, and strictly abide by relevant requirements and operate carefully when performing relevant operations.

Declaration

Envicool does not take responsibilities for the following situations:

- Operating the equipment under abnormal conditions or environments that do not meet the application scenarios described in this manual.
- Failure to comply with the operating requirements of this manual and lead to equipment failure due to improper use, or incorrect installation and maintenance methods.
- Failures not caused by this equipment (such as failures caused by the customer's equipment, software, etc.).
- Equipment damage due to replacement or disassembly of product parts by users themselves, or damage caused by unauthorized maintenance service personnel.
- Equipment damage caused by force majeure such as fire, earthquake, flood, etc.

General Safety

- Any personal injury caused by misoperation should be dealt with immediately, and first aid or medical care must be obtained immediately.
- Please strictly abide by the local safety regulations and laws and regulations to avoid accidents. The safety precautions in the manual do not represent all the safety precautions that should be followed, but only serve as a supplement to local safety regulations.
- If there are warning labels attached to the device, please read them carefully and strictly comply with them before operating.
- Only original parts and parts authorized by the manufacturer to ensure the stability and safety of air conditioner device are allowed to be used. If other parts are used, the warranty right will be invalid.
- It is not allowed to make any changes to air conditioner equipment without the agreement and consent of the manufacturer.
- Children and personnel with limited cognition and coordination ability are not allowed to operate, maintain, clean the equipment or use it as a toy.
- Please entrust professional technicians for installation and maintenance. Self-installation might lead to accidents such as water leakage, electric shock or fire.

Statement

Professionals refer to those who, by virtue of their professional training, experience and skills, and knowledge of relevant regulations, rules and measures for accident prevention and relating to operation conditions, have the ability to discover and avoid all potential hazards. The operator or the person in charge authorizes this person to ensure the safety of the equipment and carry out all necessary operations.

Electrical Safety

- It is forbidden to install or remove the power cord when powered on. Please turn off the power switch before installing or removing the power cord.
- The equipment must be grounded before being installed. Disconnect the ground wire lastly while removing the equipment. It is forbidden to power on the equipment in the absence of a properly installed ground conductor.
- Please conduct installation and maintenance after the power is off, and do not turn it on during the process. For some operations that need to be conducted during the running of equipment (such as measuring current, pressure, temperature, etc.), make sure that the wiring has been completed correctly before the power can be turned on, and the power should be cut off immediately as the operation is completed.

Warning

The capacitors contained in the air conditioner will continue to discharge after the power is cut off. To ensure personal safety, please wait at least 1 minute after the chiller is powered off before performing maintenance operations.

- Protective measures must be taken during electrical maintenance, such as wearing insulating gloves or insulating shoes, etc.

Operation Safety

- This equipment is not suitable for the personnel who suffer from the weakening in their body, sensation or mental health, and who are lack of experience and knowledge (including children), unless their use of this equipment is under supervision or guidance of a person who are responsible for their safety.
- Children shall be prevented from touching electrical appliance.
- The installation of electrical appliance shall be in line with the national wiring regulation.
- Do not touch the components inside of the chiller while it is running, avoiding electric shock or being injured by fan blades.
- If severe vibration or abnormal sound occurs during running or debugging of the chiller, please stop all operations and immediately cut off the circuit switch for inspection.
- All circuit switches should be disconnected during inspection and maintenance, and cordon should be set up to prevent others from turning off the circuit switches by mistake.
- Only when all the circuit switches are turned off and the the signal light of internal control board no longer flashes can you operate on the equipment circuit and electronics, and wearing anti-static gloves is a must.
- Water and other liquid shall be prevented from entering the terminal area of the equipment during installation and maintenance.
- It is forbidden to move heavy equipment by hands alone. Please wear protective gloves when moving light equipment by hands.
- Please wear protective gloves when there are sharp objects (such as fins, etc.) on the parts being operated.
- Be careful when cutting the cable tie to avoid cutting the cable.

Application Safety

- Do not use this product in a flammable and explosive environment.
- This series of cabinet air conditioner is for outdoor application. If it is to be used indoor, please confirm with the manufacturer and implement necessary water-proof measures.
- Please be cautious when professional maintenance is involved. For details, please dial the after-sales customer service center.

Recycling

It is strictly forbidden to dispose of this product as unsorted municipal waste, please sort it and recycle it. The disposal of scrap must comply with relevant requirements and adopt special methods for independent treatment to avoid potential pollution to the environment.

2 Product Description

2.1 Features

2.1.1 Product Introduction

Appearance

Picture 2-1-1 Appearance of MC03CDNC1A cabinet air conditioner

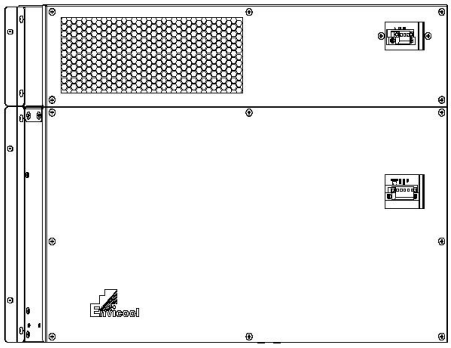

Picture 2-1-2 Appearance of MC03CDNC1A cabinet air conditioner

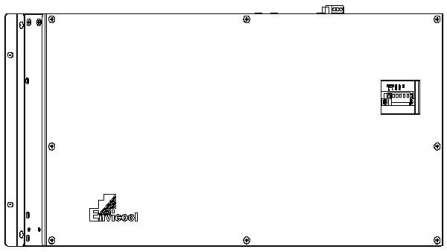

Picture 2-1-3 Appearance of the MC03CDNC1A cabinet air conditioner

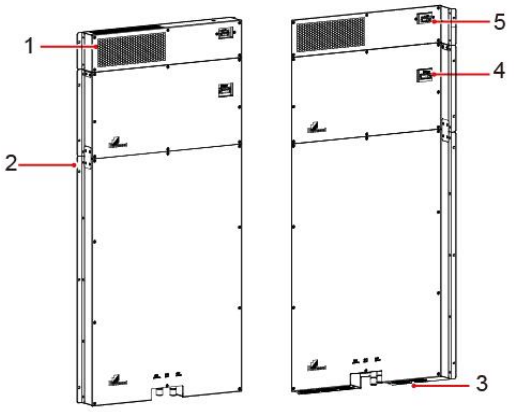

1：Air intake vent of coolant coil/air intake vent of dehumidifier

2: Flange installation

3: Air exhaust vent of coolant coil

4: Communication wiring terminal

5: Power supply wiring terminal

6: DC Power supply wiring terminal—→

Model Description

The naming convention of MC03CDNC1A cabinet air conditioner are shown inTable 2-1.

Table 2-1Naming convention

MC	15	C	D	N	C	4	A
1	2	3	4	5	6	7	8

1 Product series	MC：AC powered cabinet air conditioner series
2 Rated cooling capacity	i.e. 15 represents 1500W (15*100W)
3 Basic function	C: Cooling-only
4 Installation method	D: Door mounted
5 Application scenario	N: Normal
6 Noise level	C: Normal noise
7 Power supply system	1: 220V 50/60Hz 4:24VDC
8 Version Code	i.e: A

Features Description

MC03CDNC1A Cabinet Air Conditioner is a cooling product developed mainly for the application scenarios like outdoor communication cabinet and thermostatic battery cabinet. Specific application scenarios are as follows:

- Environment inside of cabinet is humid and huge amount of heat generated by equipment.
- Equipment in the cabinet is sensitive to environment temperature and needed to be insulated from the outside.

Features of MC03CDNC1A Cabinet Air Conditioner are as follows:

Table 2-2 Feature description

Features	Description

Features	Description
Advanced design	• With an integrated structure, all the components are installed in one chiller for the convenience of installation and maintenance. • Modularization design with compact shape structure.
Full functional	• Optional intelligent cooling and standard dehumidification function. • Support RS485 Modbus communication function. • Dry contact common alarm function available. • Power-off memory and auto-start function available.
Safe and reliable	• 24/7×365 days operating round-the-clock. • Outdoor metal architecture is adopted. And anti-corrosion measures are taken to improve anti-corrosion capacity, contributing to a long life cycle of the chiller.
Efficient and energy saving	Efficient controller is adopted, which controls the output of cooling capacity according to the need, achieving the optimal cooling and lowest energy consumption.

2.1.2 Function Description

Intelligent Cooling/Dehumidifying

The HVAC is equipped with efficient controller and display is provided for a convenient operation to check on the chiller's status and to set up parameters.

Controller monitors the temperature of returned air inside of cabinet in real time, and adjust intelligently based on the target temperature. The functions of intelligent cooling and dehumidifying are realized by controlling the running of the compressor and fan.

RS485 Modbus Communication

By adopting the modbus protocol, the air conditioner communicates with the host computer through RS485 communication port. The host computer can check the chiller operation status and set up controlling parameters by sending request, remotely monitoring the chiller.

Dry Contact On/Off Common Alarm (Optional Configured)

The air conditioner(AC) enables various alarm information for the convenience of failure locating. The common alarm enables the signal output of any alarm. When failure occurs to the chiller, the alarm signal is triggered and sent to the public alarm terminal at the same time.

Power-off Memory and Auto-start

When the power is cut off during the air conditioner operation, the parameter setting before the power loss can be remembered. The air conditioner will restart automatically and operate intelligently according to the previous parameter setting when being reconnected to the power.

2.2 Implementation

2.2.1 System Principle

The working principle of ultra-thin dehumidifier is divided into two parts: cooling principle and constant temperature dehumidification principle.

Figure2-2 schematic diagram

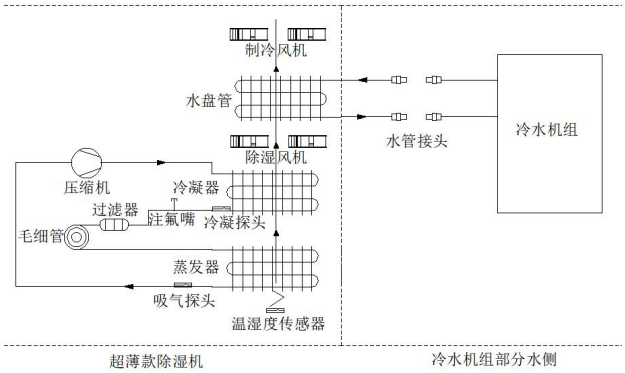

Cooling work flow of the air conditioner is shown below:

1. The compressor is turned on when the temperature inside of the cabinet reaches the dehumidification start point. The refrigerant is compressed by the compressor and turned into gas with high temperature and high pressure.
2. Then the high temperature and high pressure gas is cooled down by the condenser and turned into liquid with room temperature and high pressure.
3. The refrigerant is depressurized and becomes gas-liquid two-phase refrigerant

with low temperature and low pressure when passing by the throttling element.

4. The evaporator evaporates the two-phase refrigerant and removes heat, precipitating water from the air and realizing cooling and dehumidifying.

Dehumidification work flow of the air conditioner under constant temperature is shown below:

1. The refrigerant cooled by evaporator is compressed by the compressor again. The refrigerant is turned into gas-liquid two-phase refrigerant with low temperature and low pressure after being cooled and depressurized by the throttling element.
2. The evaporator evaporates the two-phase refrigerant and removes heat, precipitating water from the air, which goes through water coil, realizing cooling and dehumidifying.

2.2.2 Air Duct Design

The air duct circulation of the air conditioner when cooling is shown inFigure 2-3.

Figure 2-3 Air duct circulation diagram

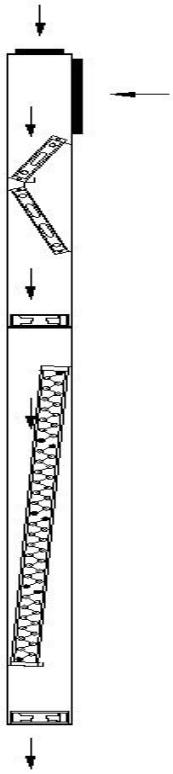

- Inner air duct circulation: the warm air behind the cooling device inside of the cabinet will be sucked in from air intake vent on the top of the chiller. After the heat exchange occurred in evaporator, the cooled air will be exhausted from the air exhaust vent underneath.

2.2.3 Control Logic

The control logic of the ultra-thin dehumidifier is shown asTable 2-3.

Table 2-3 (1) Control Logic

Functions	Logic Details	Note
Air supply mode	When dehumidification is not in demand, the air conditioner operates in air supply mode.	Fan operates, but compressor doesn't.
Dehumidification mode 1: Dehumidification based on relative humidity (RH) in cabinet	Dehumidification requirement= (RH in cabinet - dehumidification set point)/dehumidification sensitivity*100%; When the dehumidification requirement >= dehumidification start point, the air conditioner starts dehumidifying; This is to say, the RH in cabinet detected by the air conditioner-	If the dehumidification set point is 60%, sensitivity is 10%; when the dehumidification start requirement is 50, and stop requirement is -50, the dehumidification start point is 65% while the stop point is 55% (60%-10%*0.5=55%). • When relative humidity in cabinet

(standard)	dehumidification set point≥ dehumidification sensitivity/ 2 , dehumidification starts.	≥65%, dehumidification starts. • When RH in cabinet ≤ 55%, dehumidification stops.
	When dehumidification requirement<=dehumidification stop point, the dehumidification mode is off. The RH in cabinet detected by the air conditioner- dehumidification set point≤ -dehumidification sensitivity/2 , dehumidification stops.	
Dehumidification mode 2: Dehumidification based on dew point temperature in cabinet (optional configured; RH mode by default, select one from three)	Dew point temperature is converted by temperature and humidity in cabinet. Dehumidification requirement = (dew point temperature - dew point dehumidification temperature set value) / set value of dew point dehumidification sensitivity*100% (Dew point temperature≥ dew point temperature set point+ dehumidification sensitivity/2, dehumidification starts).	If the dew point dehumidification set point is 16%, sensitivity is 3℃; when the dehumidification start requirement is 50, and stop requirement is -50, the dehumidification start point is 17.5℃ while the stop point is 55% 14.5℃(16℃-3℃/2=14.5℃). • When dew point temperature in cabinet≥17.5℃, dehumidification starts. • When dew point temperature in cabinet≤14.5℃, dehumidification stops.
	Dew point temperature≤dew point temperature set point - dew point temperature sensitivity/2, dehumidification stops).	
Dehumidification mode 3: Dehumidification based on monitor dew point temperature (optional configured; RH mode by default, select one from three)	Dew point temperature is converted by monitor-released temperature and humidity. When dehumidification requirement >= dehumidification start point, the air conditioner starts dehumidification (Dew point temperature≥ dew point temperature set point+ dehumidification sensitivity/2, dehumidification starts).	When the default dehumidification dew point temperature set point is 16℃, and dehumidification sensitivity is 3℃, the dehumidification start point is 17.5℃, while the stop point is 14.5℃ (16℃-3℃/2=14.5℃). • When dew point temperature in cabinet≥17.5℃, dehumidification starts. When dew point temperature in cabinet≤14.5℃, dehumidification stops. When communication between the host computer and air conditioner is interrupted for 30s, the mode will automatically switch to dehumidification mode 2.
	Dew point temperature≤dew point temperature set point - dew point temperature sensitivity/2, dehumidification stops).	
	The temperature in cabinet detected by the air conditioner ≥ cooling set point+ cooling sensitivity/ 2 , cooling mode starts.	When the default cooling set point is 25℃, and sensitivity is 5℃, the cooling

Cooling mode (optional configured)	The temperature in cabinet detected by the air conditioner≤ cooling set point- cooling sensitivity/ 2, cooling mode is off.	start point is 27.5℃, while stop point is 22.5℃. When cooling start requirement is 50 and stop requirement is -50, And both cooling and dehumidification modes are in demand, either cooling as priority and dehumidification as priority can be chosen (address 43276,0 prioritizes dehumidification; 1 prioritizes cooling; dehumidification is prioritized by default) When cooling requirement is greater than - 100 (cooling requirement= (current temperature - setting temperature)/cooling sensitivity*100%), and the current temperature is below 15℃, a low temperature restriction exists, resulting that the dehumidification mode can not be started.

Table 2-3 (2) Default parameter list

Parameters	Default value	Range setting	Unit	Description
Cooling set point	25	[7~ 40]	°C	Please refer toTable 2-3(1) for the on/off conditions of cooling(optional) and dehumidifying.
Cooling sensitivity	5	[1~ 10]	°C	
Dehumidification set point	50	[30~ 90]	%	
Dehumidification sensitivity	10	[5~ 30]	%	

Statement

Original parameters have been set up according to customers' need before delivery, subject to the ex-factory setting. Simply take Table 2-3 as an example.

Table 2-4 Working logic of the components

Components	Working logic
Compressor	• When humidity of returned air in room is higher than dehumidification start point, compressor starts. • When humidity of returned air in room is lower than dehumidification stop point, compressor stops. • Wait for at least 3mins before restarting compressor each time, avoiding compressor failure caused by frequent on and off.
Inner circulation fan	The inner circulation fan starts or stops in accordance with the air supply requirement calculated by control system.

2.3 Specification

Please refer to Table 2-5 for performance parameters of the ultra-thin dehumidifier.

Table 2-5 Performance parameters

Parameters	Specification
Working voltage range	220VAC±15%/24VDC（-5%~10%）
Rated dehumidifying capacity	7L/D, 35℃/95%RH
Optional rated cooling capacity	1500W
Operating temperature range	+18°C ~ +45°C
Operating humidity range	5%~95%
Storage temperature range	-40°C ~ +70°C
Storage humidity range	5%~95%
Transporting performance	Land, air, maritime transport available
Working altitude	< 4500m(1000m~4500m), use with lower rated power. Lower 5% for each 1000m increase in altitude
IP code	IPX2
Noise	< 65 dB(A)
ROHS Command	ROHS2.0

3 Installation Guidance

3.1 Installation Instruction

To achieve the designed performance of MC series cabinet air conditioner, and to prolong its life cycle to the utmost, please retain installation and maintenance space according to advice provided by the manufacturer, and strictly follow the equipment drawings when installing.

3.1.1 Transporting and Moving

- Please ensure the completeness of outer packaging while transporting, loading and unloading, avoiding dampness and damage on outer packaging and preventing the chiller from crash, severe vibration, rain and chemicals.
- Do NOT place the chiller upside down or lay it down while loading, unloading and moving. Please keep the chiller upright, with the maximum tilt angle of less than 45°.

3.1.2 Installation Environment

- It is needed to measure the load capacity of the target area for installation before installing air conditioner, so as to prevent the cabinet from being bent or even ripped after installation.
- Ensure a good ventilation for the place where the cabinet and air conditioner are installed. It shall not be over humid or dusty.
- All sides of the cabinet must be sealed. Otherwise, condensed water might be generated during the operation.
- Temperature of application environment shall not exceed 45°C.

3.1.3 Installation Layout

Space requirement for installation and maintenance

Space requirement for installation and maintenance of the chiller is shown as follows.

Figure 3-1 Installation and maintenance space

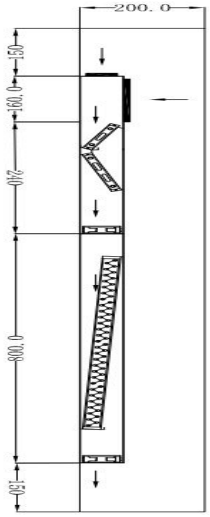

Figure 3-1Installation Layout

Item	Requirements
Installation and maintenance	• It is forbidden to place items at the internal/external circulation air duct, impeding air flow. Otherwise, it is possible to impede air circulation. Suggested distance≥150mm. • The suggested linear distance reserved inside of the cabinet≥200mm, so as to ensure the ventilation of the chiller and a more convenient maintenance.
The minimum distance from the combustible substance	The minimum distance from the chiller surface to the surface of combustible substance are required to be as follows: • Top: 2mm • Bottom: 2mm • Side: 2mm

Hole opening requirement on the cabinet door

The installation diagram of the ultra-thin dehumidifier is shown inFigure 3-2.

Figure 3-2 Installation diagram

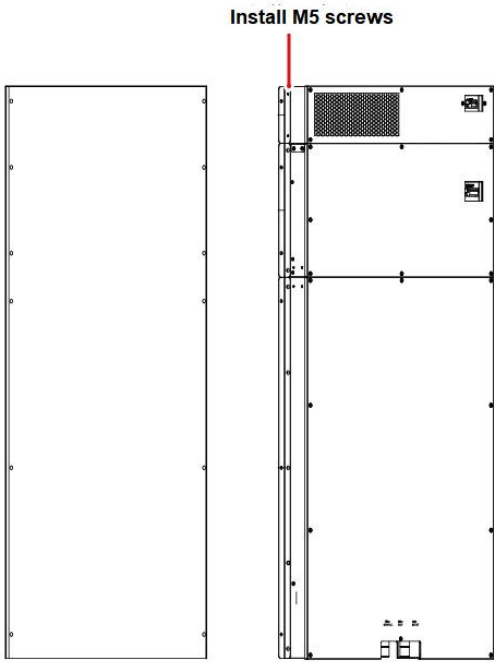

A built-in design is adopted by the ultra-thin humidifier. It is needed to leave space for opening holes on the cabinet door, and to cutout holes in advance and install nuts for securing the chiller at the same time. Please contact the technical department in our company for specific dimensions.

3.2 Installation and Preparation

3.2.1 Unpacking and Examination

Please unpack after moving the chiller to the nearest place to the installation area for the convenience of moving. Meanwhile, make sure to keep the chiller upright. Being laid down laterally or upside down is prohibited.

Please avoid scratches on the chiller surface during the process. If not to install the chiller right away, or to transfer it to the other area, please wrap it up again after completing the examination.

Please examine the chiller as follows after unpacking:

- Check whether the chiller is damaged due to shipment, particularly in terms of the loose component, dent, scratch and oil leakage, etc. If any damage is detected, please report the bar code outside of the package to the seller within a week.
- Please check the quantity of chiller and installation accessories (optional) according to accessories list.
- Before disposing the packages, please make sure there isn't any loosed components left inside. For the environmental protection, it is suggested to recycle and reuse materials like package box.

3.2.2 Tools Preparation

Before installation and maintenance, please prepare not limited to the commonly used tools listed inTable 3-2. On-site technicians can increase or decrease them according to the actual situation.

Table 3-2 Tools preparation

Tool	Icon	Function
Flat-blade screwdriver (2 mm × 75 mm)		A flat-blade screwdriver is used to install or remove the connecting wires of the controller, etc.
Phillips screwdriver (M3/M4/M5/M6)		Phillips screwdriver is used to install or remove screws for other parts. Recommended tightening torques are as follows: M3：0.5N·m，M4：1.2N·m，M5：2.7N·m，M6：4.2N·m
Allen key (T20)		Allen key is used to install or remove the anti-theft screw on the air conditioner cover plate.
Diagonal pliers		Process the cables and remove the cable ties on site.
Crimping pliers		On-site processing of cables and crimping of various terminals.

Tool	Icon	Function
Condenser special cleaning water gun		Clean the condenser of the air conditioning system.
Brush		Clean up dust.
Clamp ammeter		• Check the working voltage and current on site. • Check the internal power distribution voltage and current.
Fin comb		Corrects bent and deformed fins.

3.3 Mechanical Installation

Prerequisite

- The installation area of the chiller has been reasonably planned by referring to “3.1.2Installation Environment” and “3.1.3Installation Layout”.
- The packaging of the chiller has been disassembled, and the installation tools and accessories listed in the packing list are prepared.

Procedure

Step 1 (Optional) Stick sealing strip to the mounting surface of the cabinet.

Users can select suitable sealing strips according to the flatness of wall. Mend the uneven wall to ensure better sealing outcome.

Step 2 Move the air conditioner to the planned installation area, and make sure the position of installation holes of air conditioner and bolt holes on the wall are align.

Step 3 Secure the chiller to the wall with bolts.

Step 4 Install drainage pipe. Insert the φ10 transparent PU pipe into the corresponding connector underneath. When it reaches the stainless c-ring of quick connector, pull it down firmly to check whether it is fastened.

Step 5 Start the device and check if the PU pipe is fastened. Fix it in time if any problem detected.

If an external drainage pipe is needed when installing the cabinet air conditioner, the following steps should be taken. Connect one side of the drainage pipe to the drain under the air conditioner, and connect the other side to the specified drainage channel.

- Ensure a smooth discharge of condensed water after connecting the pipe. When the the spot for discharging condensed water is in long distance, please take measures to avoid bending the drainage pipe.
- When it is needed to extend the drainage pipe, do not reduce the diameter of the pipe (the diameter of extended pipe should not be smaller than the original pipe).
- It is suggested to apply inverted trap on-site to avoid blockage caused by air seal.
- Do not bend or press the PU pipe while using. To avoid mechanical damage and high temperature, check on the wear and tear of the PU pipe regularly and replace it if damage detected.
- Press on POM button when disassembling, pulling the PU pipe at the same time to remove it.

3.4 Electrical Connection

Prerequisite

- Mechanical installation has been completed.
- Wiring kits and cables needed are well-prepared.

  Based on requirements in client’s contract, if cables are distributed along with the cabinet air conditioner, please use them directly.

Otherwise, please refer to Table 3-3 and select suitable cables for wiring.

Table 3-3 Selection of power supply cables and air circuit breaker

Maximum operational current	**Wire diameter of power supply** UL1007	**Circuit breaker on power distribution side**
11.0A（21.6VDC） 1.3A（187VAC）	12AWG 16AWG	16A（DC）

Precautions

Refer to the danger note on the right.

- Electrical connection must be conducted by professionals.
- The maximum operating current is 9.2A. Please equip circuit protection device with suitable specification to the power distribution side according to the actual plan, ensuring the safe operation and the convenience for future maintenance.
- When connecting the power cable, it is forbidden to operate with power on.
- To avoid any destructive impact, the chiller must be reliably grounded before powering on.
- All the electrical connection must be in line with national or local electrical regulations.

Background Information

Figure 3-3 User wiring terminal

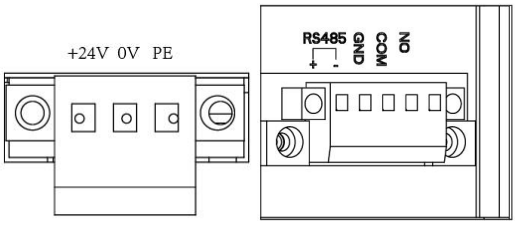

Figure 3-4 User wiring operation

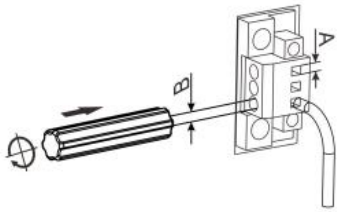

1.电源线规格(A)：max 10mm²。
2. 螺丝刀规格(B)：max Ø3mm。
3. 其它线缆规格(C)：max 0.75mm²。

Table 3-4 Steps for user wiring

Communication Cable Wiring
1. Insert the screwdriver into the interface on top of the communication wring terminal. 2. Push the screwdriver upward firmly and insert the cable into the interface on the bottom of the terminal. 3. Pull out the screwdriver. The wiring is completed.

The user wiring terminal of ultra-thin dehumidifier is as Figure 3-3. Definition of terminal is shown asTable 3-5.

Table 3-5 Definition of user wiring terminal

Type	**Corresponding Pin**	**Definition of Pin**	**Description**
Power Supply	L	Hot wire	Power input interface of the chiller.Please use copper-based cable. 220VAC: 1.5mm2 24VAC : 2.5mm2
	N	Neutral wire	
	PE	Ground protection	
Host computer communication	-	RS485-	RS485 communication interface.Please use shielded cable. 2×0.5mm^2 shielded twisted pair (STP) cable is recommended.
	+	RS485+	
	PE/GND	Weak current grounding protection	

Type	Corresponding Pin	Definition of Pin	Description
	COM	Common terminal	
	NO	Normally open terminal	

Procedure

Step 1 Connect power cord.

Notice

- Only copper-based cable can be used for power cord.
- All connection must be firm when conducting wiring.

Refer toTable 3-5 to select cable with corresponding specification. Connect one side of the cable to terminal shown inFigure 3-3, and connect the other side to the air circuit breaker on power distribution side.

Step 2 Refer toTable 3-5 for connecting signal cable.

Wiring based on actual needed function.

Notice

Please adopt shielded cable for signal wiring, and make sure it is reliably grounded.

4 Routine Maintenance

4.1 Overview

Routine maintenance is a kind of preventive maintenance, which means that maintenance personnel periodically carry out inspection and maintenance work during the normal operation of equipment, and timely discover and eliminate the alarms and hidden troubles in the equipment.

The purpose of routine maintenance is to enable a long term stable running of the equipment. Maintenance period can be adjusted accordingly, depending on the need of maintenance scenario.

Routine maintenance helps the maintenance personnel to:

- Find the alarms related to equipment operation in time and avoid further serious alarms, ensuring the stable operation of the equipment.
- Discover potential risks in time, preventing failure that could possibly cause economic losses and reduction of customer satisfaction.
- Analyze the system operating trend and implement optimization pertinently, improving the operating efficiency of equipment.

4.2 Chiller Appearance Maintenance

Routine chiller appearance maintenance is shown asTable 4-1.

Table 4-1 Chiller appearance maintenance

Maintenance item	Maintenance standard	Maintenance cycle	Test method	Troubleshooting
Chiller appearance	The chiller is dust and dirt free	6 months	Sight inspection	Use brush or cotton cloth to clean up dust and dirt in the chiller after powering off for more than 1min.

Statement

The maintenance cycle is merely a recommendation, which can be adjusted according to actual plan.

4.3 Fan Maintenance

Routine fan maintenance is shown as in Table 4-2.

Table 4-2 Fan maintenance

Maintenance item	Maintenance standard	Maintenance cycle	Test method	Troubleshooting
Operational reliability of fan	There is no dust in the fan and no foreign matter blockage at the tuyere	6 months	Sight inspection	Clean the dust of the fan with a brush and clean the foreign matter at the tuyere after more than 1min of power off.

Maintenance item	Maintenance standard	Maintenance cycle	Test method	Troubleshooting
	The fan blades are not damaged, and the fan rotates smoothly without abnormal noise	6 months	Sight inspection	After the power is turned off for over 1 minute,fasten the fixing screws of the fan and check whether there is any internal cable or other objects interfering with the rotation of the fan. If failure occurs to the fan, please repair the fan or replace components.

Statement

The maintenance cycle is merely a recommendation, which can be adjusted according to actual situation.

4.4 Electrical Control System Maintenance

Electrical control system maintenance is shown as inTable 4-3.

Table 4-3 Electrical control system maintenance

Maintenance item	Maintenance standard	Maintenance cycle	Test method	Troubleshooting
Reliability of power cable and power terminal of wiring panel	No looseness of electrical cables and terminals	6 months	Sight inspection	Tighten the loose cables and terminals with a screwdriver after over 1 minute of power off.
	There is no aging, damage, abnormal heating and other abnormalities in the power cable	6 months	Sight inspection	Replace the power cable after over 1 minute of power off.
	There is no dust at the wiring panel	6 months	Sight inspection	Clean up the dust with a brush after more than 1 minute of power off.

Statement

The maintenance cycle is merely a recommendation, which can be adjusted according to actual plan.

4.5 Condenser Maintenance

Notice

The edges of the condenser blades are sharp, please wear gloves for operation.

Routine maintenance of condenser is shown inTable 4-4.

Table 4-4 Condenser maintenance

Maintenance item	Maintenance standard	Maintenance cycle	Test method	Troubleshooting
Condenser cleaning	Condenser is free from dust and foreign matter blockage	6 months	Sight inspection	Clean the condenser with water gun after more than 1 minute of power off.
	Fins are not seriously deformed	6 months	Sight inspection	Use tools such as a fin comb to correct it at least one minute of power off.

Statement

The maintenance cycle is merely a recommendation, which can be adjusted according to actual plan.

5 Failure Management

Statement

When professional failure maintenance is involved, do NOT handle it personally.Please contact after-sale service center by calling the free service hotline 400-188-8966 for professional guidance.

5.1 Fan Failure

Common fan failures and maintenance method are shown inTable 5-1.

Table 5-1Fan failure

Failure	Possible cause	Inspection and maintenance
Inner circulation fan is not running	AC is unpowered	Check and repair the open circuit and short circuit.
	AC power input abnormal, i.e. power supply over-voltage, under-voltage	Check on the display and see whether corresponding alarm occurs.
	The fan is stuck	Check whether there are other components impede fan operation or any foreign matter stuck in the fan.
	Loose terminal	Check whether the butt terminal of fan is loose.
	Fan damaged	If inner circulation fan failure alarm occurs, yet power wiring is normal, fan is not stuck by foreign matters, it could be fan damage. It is needed to replace the fan.
	Main control board failure	If the causes above have been ruled out, please check on the main control board. If the main control board malfunctions, please replace it.
Abnormal sound of fan	Wear of fan bearings	Replace the fan.
	Fan blades strike other objects	Check whether there's cable entangled in the fan blades.
	Fixing screws of fan are loose.	Re-tighten the fixing screws of fan.

5.2 Cooling System Failure

Common cooling system failures and maintenance method are shown inTable 5-2.

Table 5-2 Cooling system failure

Failure	Possible cause	Inspection and maintenance
Compressor not started	Loose circuit connection	Fasten the circuit connector.

Failure	Possible cause	Inspection and maintenance
	Open or short circuit	Check the open circuit or short circuit, and repair the main power supply.
	Control board/driver board damaged	Replace control board/ driver board.
	Compressor motor failure	Replace compressor.
	Other abnormal alarm	Check on the display and see whether other alarm occurs.

5.3 Components Replacement

5.3.1 Replace Water Coil Cooling Fan

Prerequisite

- The power has been cut off for at least 1min.
- The screwdriver has been prepared referring toTable 3-2 and the spare parts are prepared.

Background Information

The replacement of external circulation fan is suggested as in Figure 5-1.

Figure 5-1 Replacing cooling fan

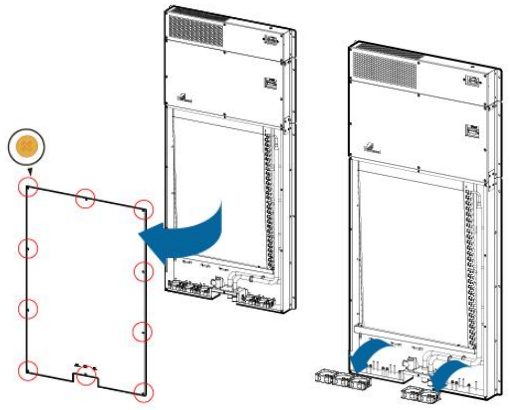

Procedure

Step 1 Remove the panel of the cabinet air conditioner at the outdoor side.

Step 2 Remove the electric wiring terminal of external circulation fan.

Step 3 Remove the fixing screws on external circulation fan bracket.

Step 4 Remove the fixing screws between fan and bracket.

Step 5 Take out the external circulation fan and replace it.

Step 6 Reinstall the equipment and complete the components replacement by following “step1” to “step 4” in anticlockwise order.

5.3.2 Replacing Inner Circulation Fan (Dehumidifying Fan)

Prerequisite

- The power has been cut off for at least 1min.
- The screwdriver has been prepared referring toTable 3-2 and the spare parts are prepared.

Background Information

The replacement of internal circulation fan is suggested as in Figure 5-2.

Figure 5-2 Replacing inner circulation fan

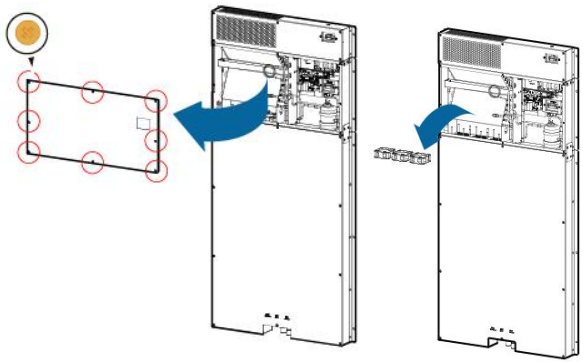

Procedure

Step 1 Firstly, remove the panel of the cabinet air conditioner at the indoor side.

Step 2 Remove the fixing screws on the electrical wiring terminal of

internal circulation fan and its bracket.

Step 3 Remove the inner panel of the cabinet air conditioner(fan included).

Step 4 Remove the fixing screws between the inner circulation fan and its panel.

Step 5 Take out the internal circulation fan and replace it.

Step 6 Reinstall the equipment and complete the components replacement by following “step1” to “step 4” in anticlockwise order.

5.3.3 Replacing Electric Control Components

Prerequisite

- The power has been cut off for at least 1min.
- The screwdriver has been prepared referring toTable 3-2 and the spare parts are prepared.

Background Information

Electric control module includes multiple components like control board and drive plate. Difference can be tracked in the module composition and layout of different model of air conditioner. The replacement procedure of electrical components are similar.Figure 5-3 replacing the control board is taken as an example for demonstration.

Figure 5-3 Replacing control board

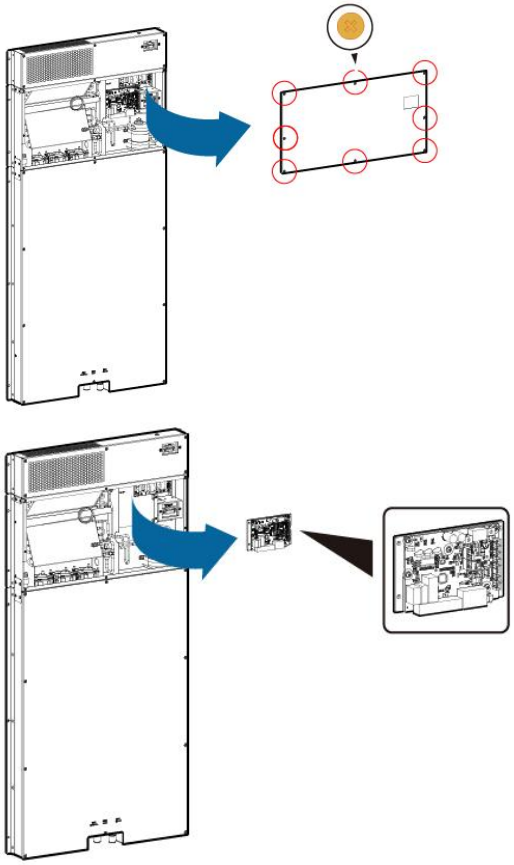

Procedure

Step 1 Remove the panel of the cabinet air conditioner at the indoor side.

Step 2 Remove the electrical cables on the control board.

It is suggested to take photo of the wiring before disassembling, which can be reference for installation later on.

Step 3 Remove the fixing screws of the control board.

Step 4 Take out the control board and replace it.

Step 5 Reinstall the equipment and complete the components replacement by following “step1” to “step 4” in anticlockwise order.

5.3.4 Replacing Compressor

Notice

- Please contact the after-sales service of the manufacturer for replacing the compressor. It is prohibited to replace it personally, avoiding abnormal operation of the chiller led by misoperation.
- It is strictly forbidden to dispose of the malfunctioning compressor as unclassified municipal waste, and it must be handled independently in accordance with relevant special requirements.

5.4 Alarm Handling

Alarm information of the cabinet air conditioner is shown inTable 5-3.

Lock alarms (i.e. “High voltage lock” mentioned below) need to be lifted manually by powering off and then powering on the chiller, while the other alarms will be lifted automatically when alarm conditions aren’t met in current scenario.

Table 5-3 Alarm list

Alarm	Generation condition	Examination method	Failure handling
High temperature alarm	Temperature in the cabinet is higher than the setting value of high temperature alarm	1.Check whether the setting value of high temperature alarm is reasonable. 2.Check whether any other abnormal alarm occurs. 3.Check whether the cooling capacity of the chiller meets requirement.	1.Adjust the value according to actual plan. 2.Refer to the corresponding handling methodsf or failure alarms. 3. Increase the quantity of air conditioner.
Inner temperature sensor failure	The temperature sensor at air intake vent of indoor device is abnormal	Check whether the temperature sensor wiring is open or short circuited.	Conduct wiring properly based on wring diagram and replace the cable if it is damaged.
Compressor Fault	Compressor running abnormally	Check whether the compressor can be started and run normally.	Replace compressor.
For detailed alarm, please refer to the Communication Protocol of our company. Please contact our technicians if you have any question.			

6 Reference

A sample bar code of the chiller is displayed asFigure 6-1.

Figure 6-1 Sample of bar code of chiller

- The first 15 digits: Customized by manufacturer (M01110112000001).
- Digit 16~20: Production date. As in, 13701 stands for July 1st 2013. A/B/C stand for October/November/December respectively.
- Last 4 digits: Serial number of the current batch of products.

前言

概述

本文档主要介绍超薄款除湿空调的产品概述、安装、控制器操作、例行维护和故障处理，方便读者了解该空调的使用和维护。

读者对象

本文档主要适用于以下读者：

- 产品安装工程师
- 技术支持工程师
- 售后维护工程师

符号约定

文中可能出现以下标志，代表的含义如下。

符号	说明
危险	警示存在严重危险的场景，若不遵守要求，可能导致死亡或严重的人身伤害。
警告	警示存在潜在危险的场景，若不遵守要求，可能造成中度或轻微的人身伤害。
注意	警示影响设备安全或环境安全的场景，若不遵守要求，可能对设备等造成破坏或其他不良结果。
说明	提示一般性细节，或其它有用的、可以简化工作的辅助信息。

修订记录

修改记录累积了每次文档更新的说明。最新版本的文档包含以前所有文档版本的更新内容。

版本	更新	修改日期
A1	首次发布。	20240321
A2	更新除湿量标定参数、增加 PU 管连接注意事项	20240507
A3	增加逻辑优化	20240726

目录

前言 27
目录 28
1 安全注意事项 29
2 产品描述 31
2.1 特性 31
2.1.1 产品简介 31
2.1.2 功能描述 32
2.2 实现 32
2.2.1 系统原理 32
2.2.2 风道设计 32
2.2.3 控制逻辑 33
2.3 规格 35
3 安装指南 36
3.1 安装须知 36
3.1.1 运输与搬运 36
3.1.2 安装环境 36
3.1.3 安装布局 36
3.2 安装前准备 36
3.2.1 开箱与检验 36
3.2.2 工具准备 37
3.3 机械安装 37
3.4 电气连接 38
4 例行维护 40
4.1 概述 40
4.2 机组外观维护 40
4.3 风机维护 40
4.4 电控系统维护 41
4.5 冷凝器维护 41
5 故障管理 42
5.1 风机故障 42
5.2 制冷系统故障 42
5.3 部件更换 43
5.3.1 更换水盘管制冷风机 43
5.3.2 更换内循环风机（除湿风机） 43
5.3.3 更换电控组件 43
5.3.4 更换压缩机 44
5.4 告警处理 44
6 参考 46

1 安全注意事项

请仔细阅读本章后再进行装配、安装、电气连接和维护作业，并在执行相关操作时严格遵守相关要求，谨慎操作。

声明

以下情况本公司不承担责任：

- 在不满足该手册描述应用场景的异常条件或环境中运行设备。
- 未遵守本手册的操作要求，因不当用途，或不正确的安装、维护方式等导致设备故障。
- 非本设备造成的故障（如由用户的设备、软件等造成的故障）。
- 用户自行更换或拆装产品零部件造成的设备损坏，或由非授权维修服务者拆修而造成的设备损坏。
- 由于火灾、地震、洪水等不可抗力而造成的设备损坏。

通用安全

- 误操作导致任何人身伤害都应该在第一时间处理，务必立即获得急救或医疗护理。
- 请严格遵守所在地的安全规范和法律法规，避免意外事故的发生。手册中的安全注意事项不代表应该遵守的所有安全事项，仅作为当地安全规范的补充。
- 若设备上粘贴有警示标签，操作前请务必认真阅读并严格遵守。
- 仅允许使用原厂部件，以及经过制造商授权、用于确保空调设备稳定性和安全性的部件。如果使用其他部件则保修权利失效。
- 不允许在未与制造商协定并经过其同意的情况下，对空调设备进行任何更改。
- 不允许认知和协调能力受限的人员和儿童操作、维护、清洁设备或将其用作玩具。
- 进行安装维护作业请委托专业技术人员，自行操作可能导致漏水、触电或火灾等事故发生。

说明

专业人员指具备专业培训、经验和技能,以及熟悉事故防范和操作要求相关的条例、规定和措施的人员，并且此人具备发现并规避所有潜在危险的能力。由运营方或负责人授权该人员确保设备的安全性、进行所有必要的操作。

电气安全

- 禁止带电安装、拆除电源线。安装、拆除电源线前请关闭电源开关。
- 安装设备时，必须先接地。拆除设备时，最后再拆地线。禁止在未安装接地导体时对设备上电。
- 请在断电后进行安装维护操作，并且在操作过程中请勿接通电源。某些需要运行时进行的操作（如测量电流、压力、温度等），必须确保设备接线已经全部正确完成，方可接通电源，操作完成后应立即切断电源。

警告

机组中包含的电容在断电后仍会持续放电，为了确保人身安全，请在机组断电后至少 1 分钟以上再进行维护操作。

- 进行电气维护时必须做防护措施，如佩戴绝缘手套或穿绝缘鞋等。

操作安全

- 本设备不适用于身体、感官或精神能力下降或缺乏经验和知识的人员（包括儿童），除非负责其安全的人员对其使用本设备进行了监督或指导。
- 应监督儿童，确保他们不触碰电器。
- 电器的安装应符合国家接线规定。
- 机组运行时请勿用手随意触碰机组内部器件，避免触电或被风机扇叶所伤。
- 机组运行或调试过程中如果出现剧烈振动或异常声响，请停止一切操作并立即切断电路开关进行检查。
- 检修维护时应断开全部的电路开关，并设立警戒防止他人误闭合电路开关。
- 仅当断开全部的电路开关，且内部控制板不再闪烁信号灯时，方可对设备线路和电子器件进行操作，且必须佩戴防静电手套。
- 安装维护过程中请勿让水等液体进入设备的接线端子区域。
- 禁止独自一人手工搬运较重的设备，手工搬运较轻设备时请佩戴保护手套。
- 操作部件存在利物（如翅片等）时，请佩戴保护手套。
- 剪断扎线带时请小心，避免割伤线缆。

应用安全

- 禁止在易燃易爆环境中使用本产品。
- 该系列机柜空调为户外应用型空调，若需将空调应用于室内，请与产品生产厂家进行确认后实施必要的防水措施。
- 涉及专业的维护时请谨慎操作，具体请咨询产品生产厂家的售后客户服务中心。

回收处理

严禁将该产品作为未分类的城市垃圾进行报废处理，请进行分类回收利用。报废处理必须遵循相关要求，采取特殊方式进行独立处理，避免对环境造成潜在污染。

2 产品描述

2.1 特性

2.1.1 产品简介

产品外观

图 2-1-1 MC03CDNC1A 机柜空调外观

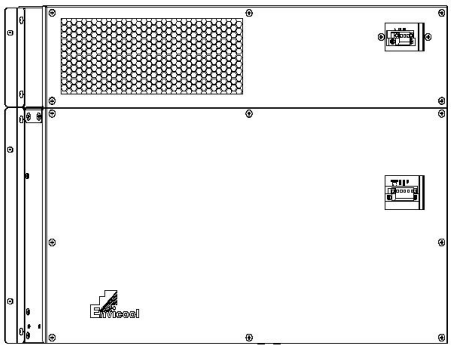

图 2-1-2 MC03CDNC4A 机柜空调外观

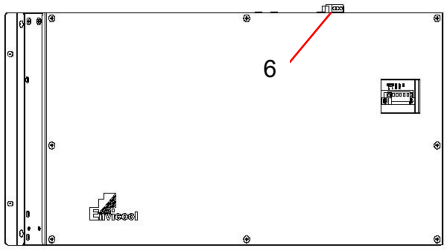

图 2-1-3 MC15CDNC1A 机柜空调外观

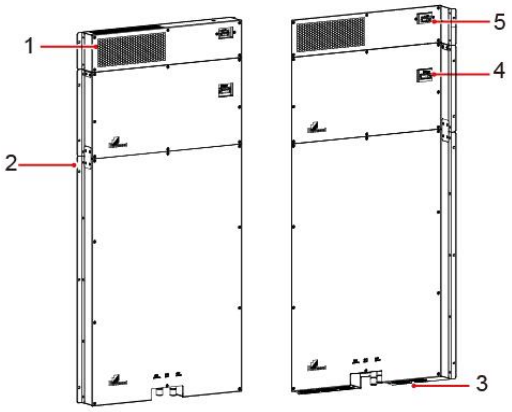

1：水盘管进风口/除湿机进风口　2：安装法兰

3：水盘管出风口　4：通讯接线端子

5：电源接线端子　6:直流电源接线端子

型号说明

MC15CDNC4A 机柜空调的命名规则如表 2-1 所示。

表 2-1 命名规则

MC	15	C	D	N	C	4	A
1	2	3	4	5	6	7	8

1 产品系列　MC：交流机柜空调系列

2 额定制冷量　如：15 表示 1500W（15*100W）

3 基本功能　C：单冷

4 安装方式　D：门装

5 应用环境　N：常规

6 噪音等级　C：普通噪音

7 电源制式　1：220V 50/60Hz 4:24VDC

8 版本代码　如：A

特性说明

MC03CDNC1A 机柜空调是一款主要针对通信户外机柜、蓄电池恒温柜等应用环境而开发的制冷产品，具体适用场景如下：

- 柜内环境潮湿、设备发热量大。
- 柜内设备对环境温度敏感，且需要与柜外隔离。

MC03CDNC1A 机柜空调主要具备以下特性：

表 2-2 特性说明

特性	说明
设计先进	• 采用一体式结构，所有部件封装在一个机箱，方便安装和维护。 • 模块化设计，外形结构紧凑。
功能齐备	• 选配智能制冷和标配除湿功能。 • 支持 RS485 Modbus 通讯功能。 • 选配干接点公共告警功能。 • 标配断电记忆和自启动功能。

特性	说明
安全可靠	• 支持 24 小时×365 天持续运行。 • 采用户外金属构造，并采用防腐措施提升抗腐蚀能力，机组寿命长。
高效节能	采用高效控制器，按需控制冷量输出，实现最佳制冷和最低能耗。

2.1.2 功能描述

智能制冷/除湿

空调器配置高效控制器，并提供显示器用于查看机组状态和设置参数，操作方便。

控制器实时监测柜内回风温湿度，并根据目标温度设定进行智能调节，通过控制压缩机和风机的运行，实现智能制冷、除湿功能。

RS485 Modbus 通讯

空调器通过 RS485 通讯接口,采用 modbus 协议与上位机进行通讯。上位机通过发送请求消息可执行查询机组运行状态和设置控制参数等操作，实现对机组的远程监控。

干接点公共告警（选配）

空调器支持丰富的告警信息，方便故障定位。公共告警功能可实现机组任意告警的信号输出，当机组故障时触发告警信号，并同步输出信号至公共告警端口。

断电记忆和自启动

空调器在运行过程中掉电时会记忆掉电之前的参数设置信息，再次来电后自行启动，并根据断电前的参数设置自动智能运行。

2.2 实现

2.2.1 系统原理

超薄除湿空调的工作原理分为两部分：制冷除湿原理和恒温除湿原理。

图 2-2 原理图

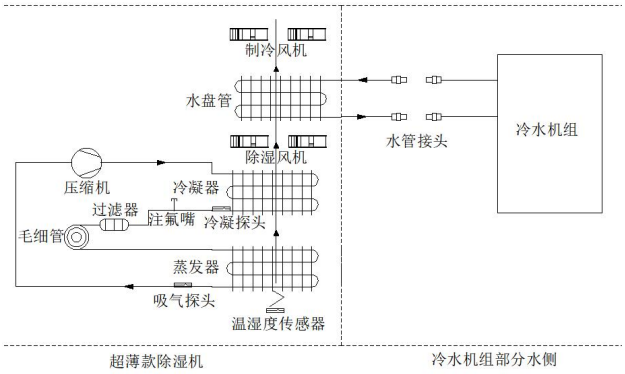

空调器制冷除湿原理工作流程如下所示：

1. 机柜内温度达到除湿开启点后压缩机启动，制冷剂经压缩机压缩变为高温高压气态。
2. 冷凝器对高温高压的气态制冷剂冷凝降温，制冷剂变为常温高压液态。
3. 制冷剂经节流元件降压后变为低温低压气液两相制冷剂。
4. 蒸发器将低温低压气液两相制冷剂蒸发吸热，将湿空气的水分析出，实现降温除湿的效果。

空调器恒温除湿工作流程如下所示：

1. 经蒸发器换热后的制冷剂再次进入压缩机进行压缩。制冷剂经节流元件降温降压后变为低温低压气液两相制冷剂。
2. 蒸发器将低温低压气液两相制冷剂蒸发吸热，将湿空气的水分析出。除湿后的湿空气经水盘管制冷，实现恒温除湿效果。

2.2.2 风道设计

超薄除湿空调制冷时的风路循环如图 2-3 所示。

图 2-3 风路循环图

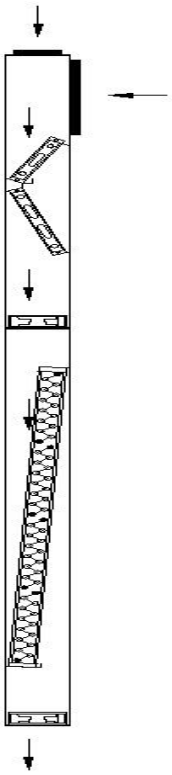

- 内风路循环：机柜内冷却设备后的热空气从机组内侧上部的进风口被吸入，经过蒸发器热交换后，冷空气从内侧下部的出风口被排出。

2.2.3 控制逻辑

超薄除湿空调的控制逻辑如表 2-3 所示。

表 2-3（1）控制逻辑

功能项	具体逻辑	备注
送风模式	没有除湿需求时，空调按照送风模式运行	风机运行，压缩机不运行
除湿模式 1： 柜内相对湿度除湿（标配）	除湿需求=（柜内相对湿度-除湿设定点）/除湿回差*100%；当除湿需求>=除湿开启需求点时，空调进入除湿； 即，空调采集的柜内相对湿度-除湿设定点 ≥ 除湿回差/2，开启除湿。	默认除湿设定点为 60%，除湿回差为 10%，除湿开启需求 50，关闭需求-50 时，除湿开启点为 65%，除湿停止点为 55%（60%-10%*0.5=55%）。 • 当柜内相对湿度 ≥ 65%时，开启除湿。 • 当柜内相对湿度 ≤ 55%时，停止除湿。
	当除湿需求<=除湿关闭需求点时，空调退出除湿。 空调采集的柜内相对湿度-除湿设定点 ≤ -除湿回差/2，停止除湿。	
除湿模式 2： 柜内露点温度除湿（选配，默认	露点温度由柜内温度和湿度换算得出，除湿需求=(露点温度-露点除湿温度设定值)/露点除湿回差设定值*100%， 即，露点温度≥ 露点温度设定点+除湿回差/2，开启除湿。	默认除湿露点温度设定点为 16℃，除湿回差为 3℃，除湿开启需求 50，关闭需求-50 时，则除湿开启点为 17.5℃，除湿停止点为 14.5℃（16℃-3℃/2=14.5℃）。

相对湿度模式，三选一）	露点温度≤ 除湿露点温度设定点 - 露点温度回差/2，停止除湿。	• 当柜内露点温度 ≥ 17.5℃时，开启除湿。 • 当柜内露点温度 ≤ 14.5℃时，停止除湿。
除湿模式 3：监控露点温度除湿（选配，默认相对湿度模式，三选一）	露点温度由监控下发的温度和监控下发的湿度换算得出，当除湿需求>=除湿开启需求点时，空调进入除湿； 即，露点温度 ≥ 露点温度设定点+除湿回差/2，开启除湿。	默认除湿露点温度设定点为 16℃，除湿回差为 3℃时，则除湿开启点为 17.5℃，除湿停止点为 14.5℃（16℃-3℃/2=14.5℃）。 • 当柜内露点温度 ≥ 17.5℃时，开启除湿。 当柜内露点温度 ≤ 14.5℃时，停止除湿。当上位机与空调的通信中断时间达到 30S 时，空调自动切换为除湿模式 2。
	露点温度≤ 除湿露点温度设定点 - 露点温度回差/2，停止除湿。	
制冷模式（选配）	空调采集的柜内温度≥ 制冷设定点+制冷回差/2，开启制冷模式。	默认制冷设定点位 25℃，制冷回差为 5℃时，制冷开启点为 27.5℃，制冷停止点为 22.5℃，制冷开启需求 50，关闭需求-50 时。 当制冷和除湿模式都有需求，可选制冷优选和除湿优先（43276,0 除湿优先，1 制冷优先，默认除湿优先） 当制冷需求大于-100（制冷需求计算=（当前温度-设定温度）/制冷回差*100%），当前温度低于 15℃时，存在除湿低温限制，无法开始除湿模式。
	空调采集的柜内温度≤ 制冷设定点-制冷回差/2，退出制冷模式。	

表 2-3（2）默认参数表

参数名	缺省值	设置范围	单位	说明
制冷设定点	25	[7~40]	°C	制冷（选配）、除湿的开启和关闭条件请参见表 2-3（1）。
制冷灵敏度	5	[1~10]	°C	
除湿设定点	50	[30~90]	%	
除湿灵敏度	10	[5~30]	%	

说明

空调出厂时已根据客户需求设定好参数初始值，具体以出厂设置为准，表 2-3 仅为举例说明。

表 2-4 部件工作逻辑

部件	工作逻辑
压缩机	• 当室内回风湿度高于除湿开启点时，压缩机启动运行。 • 当室内回风湿度低于除湿停止点时，压缩机停止运行。 • 压缩机每次停机需等待三分钟以上才能再次启动，避免频繁启停导致压缩机故障。
内循环风机	没有除湿需求时，仅内循环风机运行。

2.3 规格

超薄款除湿机柜空调的性能参数见表 2-5。

表 2-5 性能参数表

参数	规格
工作电压范围	220VAC±15% ,50/60±3Hz / 24VDC（-5%~10%）
额定除湿量	7L/D，35℃/95%RH
选配额定制冷量	1500W
运行温度范围	+18°C ~ +45°C
运行湿度范围	5% ~ 95%
贮存温度范围	-40°C ~ +70°C
贮存湿度范围	5% ~ 95%
运输性能	能适应陆运、空运和海运等方式运输
工作海拔	< 4500m（1000m~4500m）时请降额使用，每提高 1000m，降额 5%）
防护等级	IPX2
噪音	< 65dB(A)
ROHS 指令	ROHS2.0

3 安装指南

3.1 安装须知

为达到 MC 系列机柜空调的设计性能，和最大限度地延长其使用寿命，请参考厂家提供的建议预留安装和维护的空间，并严格安装设备图纸进行安装。

3.1.1 运输与搬运

- 在运输和装卸过程中，请确保外包装完整，避免受潮或损坏外包装，并防止机组受到碰撞和剧烈震动，以及雨淋和化学腐蚀。
- 在装卸和搬运过程中，禁止倒放和平放。请保持机组正立，最大倾斜度不允许超过 45° 。

3.1.2 安装环境

- 安装空调前需充分评估机柜安装部位的承重能力，防止安装空调后导致机柜变形甚至被拉裂。
- 确保机柜及空调的安装地点具有良好的通风条件，同时不能过度潮湿和有过多的灰尘。
- 机柜各侧都必须密封。如果机柜气密性不佳，空调运行过程中可能出现冷凝水。
- 应用环境温度不能超过 45°C。

3.1.3 安装布局

安装维护空间要求

机组安装维护空间的具体要求如下所示。

图 3-1 安装维护空间

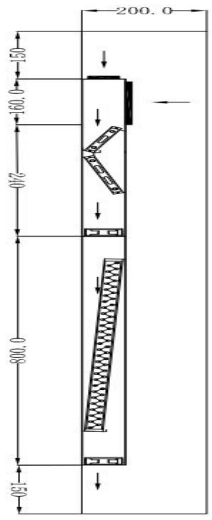

表 3-1 机组安装布局

项目	要求
安装维护	• 内/外循环风口处不允许放置物品阻碍空气流动。否则可能阻碍风路循环，建议距离≥150mm。 • 建议机柜内侧预留空间直线距离≥200mm，确保机组的通风和更方便的进行维护。
离可燃物最小间距	从机组表面到可燃物表面的最小间距要求如下： • 顶部：2mm • 底部：2mm • 侧面：2mm

柜门开孔要求

超薄除湿空调的安装示意图如图 3-2 所示。

图 3-2 安装示意图

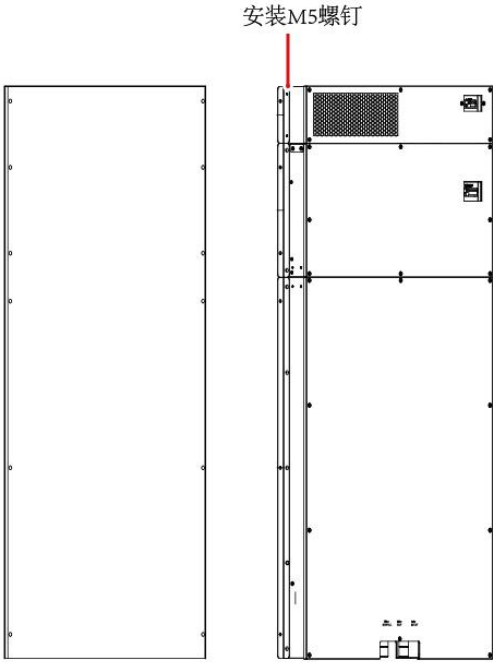

超薄除湿空调器采用嵌入式，需在柜门上为空调预留开孔，同时提前打孔并安装用于固定机组的螺母。详细尺寸请提前联系我司技术部门。

3.2 安装前准备

3.2.1 开箱与检验

请尽量将机组搬运到离安装位置最近的地点再进行开箱拆卸，以方便移动机组。同时确保机组正立放置，不允许侧卧或倒置。

操作过程中请避免划伤机组表面。如果不是立即安装产品，或需要转运产品至其他地区时，请在开箱检查完成后重新对机组进行包装。

机组开箱后请做好如下检查：

- 请仔细检查机组是否存在因运输造成的破坏，尤其关注是否存在部件松动、凹坑、擦伤和漏油等现象。如果发现了任何损坏，请在一周内连同包装外的条形码编号上报到销售商。
- 请按照附件清单清点机组和安装附件（选配）的数量。
- 处理包装材料前，请务必确认包装材料里未掺杂任何松动掉落的部件。为了保护环境，建议对包装箱等进行回收利用。

3.2.2 工具准备

进行安装和维护前请准备不限于表 3-2 中列举的常用工具，现场技术人员可根据实际情况酌情增减。

表 3-2 准备工具

工具名称	图示	功能
一字螺丝刀(2mm×75mm)		安装或拆除控制器等的连接线。
十字螺丝刀(M3/M4/M5/M6)		安装或拆卸部件的螺钉。不同螺钉的建议紧固力矩如下：M3：0.5N·m，M4：1.2N·m，M5：2.7N·m，M6：4.2N·m
内六角扳手（T20）		安装或拆除空调盖板的防盗螺钉。
斜口钳		现场加工线缆，去除固线扎带。
压线钳		现场加工线缆，压接各式端子。
专用清洁水枪		清洗冷凝器。
毛刷		清理灰尘。
钳型电流表/万用表		• 现场检测工作电压、电流。 • 现场检测内部配电电压、电流。
翅片梳		矫正弯曲变形的翅片。

3.3 机械安装

前提条件

- 已参考“3.1.2 安装环境”和“3.1.3 安装布局”合理规划机组的安装区域。
- 已拆卸机组的包装，并准备好安装工具和配置清单中列举的附件。

操作步骤

（可选）在机柜空调的安装面上粘贴密封胶条。

用户可根据墙面平整度自行选用合适厚度的密封胶条，对不平整的墙壁进行填补，确保空调与墙壁之间的密封效果。

步骤 1 将空调搬运并摆放至规划的安装区域，确保空调的安装孔与墙壁上的螺栓孔位对齐。

步骤 2 使用螺栓将机组紧固在墙体上。

步骤 3 安装排水管，将 ϕ10 透明 PU 管插到机组下方 PU 管接头处，PU 管插入时顶到快速接头的不锈钢卡簧处，同时用力往下拉检查是否安装牢固。

步骤 4 启动设备，检查 PU 管的安装是否牢固，如有问题，及时调整。

若机柜空调安装时有外接排水管的需求时执行该步骤。将排水管一端连接至空调底部的排水口，另一端连接至指定排水通道。

- 请确保接管后冷凝水排放顺畅。当冷凝水排放距离较远时，请采取措施避免排水管弯折。
- 当需要对排水管进行延长时，不允许减小延长管的管径（即延长管的管径不能比原排水管管径小）。
- 为避免气封导致排水不畅，现场建议增加反向弯。
- 使用过程中不允许 PU 管被折或者压住。避免机械损伤或高温，定期检查 PU 管的磨损情况，如有磨损及时更换。
- 拆除时按住 POM 按钮，同时拉 PU 管即可将 PU 管拆除。

3.4 电气连接

前提条件

- 已完成机械安装。
- 已准备好接线工具和所需的线缆。

  根据客户合同要求，若机柜空调随机发货了电缆请直接使用，否则请参考表 3-3 选取合适的电缆进行接线。

  表 3-3 电源线和空开选型

最大运行电流	电源线径 UL1007	配电侧断路器
11.0A（21.6VDC） 1.3A（187VAC）	12AWG 16AWG	16A（直流）

注意事项

见右侧危险备注

危险

- 电气连接必须由受过培训的专业人员进行操作。
- 机组最大运行电流 11.0A，请根据实际规划在配电侧安装合适规格的电路保护装置，确保操作安全且方便机组的后续维护。
- 连接电源线时，禁止带电操作。
- 为了避免任何破坏性的影响，接通电源前机组必须可靠接地。
- 所有电气连接都必须符合国家和当地电气规范要求。

背景信息

图 3-3 用户接线端子

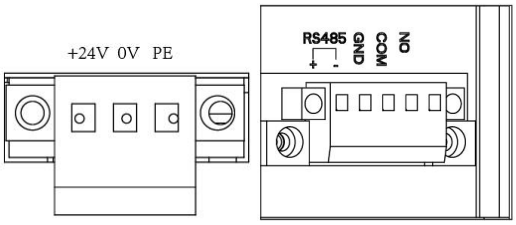

图 3-4 用户接线操作

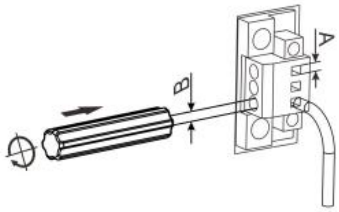

1.电源线规格(A)：max 10mm²。
2. 螺丝刀规格(B)：max Ø3mm。
3. 其它线缆规格(C)：max 0.75mm²。

表 3-4 用户接线步骤

通讯线接线
1、将螺丝刀插入通讯接线端子的上方接口。 2、螺丝刀向上用力，将线缆插入接线端子的下方接口。 3、拔出螺丝刀，即可完成线缆连接。

超薄除湿空调的用户接线端子如图 3-3 所示，端子定义如表 3-5 所示。

表 3-5 用户接线端子定义

类型	对应脚位	脚位定义	说明
电源	L	火线	整机电源输入接口，请使用铜制线缆。 220VAC：1.5mm2 24VAC ：2.5mm2
	N	零线	
	PE	接地保护	
上位机通讯	-	RS485-	RS485 通讯接口。请使用屏蔽线缆，建议采用 2×0.5mm^2 双绞屏蔽线。
	+	RS485+	
	PE/GND	弱电接地保护	
	COM	公共端子	
	NO	常开端子	

操作步骤

步骤 1 连接电源线缆。

注意

- 电源线只可使用铜制电缆。
- 接线时必须确保所有连接牢固。

参考表 3-5 选用对应规格的线缆，将电源线缆一端连接图 3-3 所示的电源接线端子，另一端连接至配电侧的空气开关上。

步骤 2 参考表 3-5 连接信号线缆。

根据实际所需功能进行接线。

注意

信号线连接请采用屏蔽线缆，并保证可靠接地。

4 例行维护

4.1 概述

例行维护是一种预防性的维护，指维护人员在设备的正常运行过程中，周期性地开展检查和维护工作，及时发现并消除设备中的告警和故障隐患。

例行维护的目的是使设备能够长期稳定地运行，可根据维护场景需要，适当地调整维护周期。通过例行维护：

- 能及时的发现设备运行中的相关告警，避免告警进一步严重，保证设备的稳定运行。
- 能及时发现故障隐患，将故障消灭在萌芽期，避免故障发生后的经济损失和客户满意度的降低。
- 能发现设备运行趋势，有针对性地实施优化，提高设备的运行效率。

4.2 机组外观维护

机组外观的例行维护如表 4-1 所示。

表 4-1 机组外观维护

维护项	维护标准	维护周期	检测方式	异常处理
机组外观	机组清洁无尘、无污垢	6 个月	目测	断电 1 分钟以上后，使用刷子或棉布清除机组灰尘、污垢。

说明

以上维护周期仅为建议值，可根据实际规划进行调整。

4.3 风机维护

风机的例行维护如表 4-2 所示。

表 4-2 风机维护

维护项	维护标准	维护周期	检测方式	异常处理
风机运行可靠性	风机无灰尘，风口处无异物堵塞	6 个月	目测	断电 1 分钟以上后，使用毛刷清理干净风机的灰尘。清理风口处的异物。
	风机扇叶无破损，转动风机顺畅无异响	6 个月	目测	断电 1 分钟以上后，对风机进行紧固，检查是否有内部线缆等干涉风机转动。 若风机故障，请进行风机维修或部件更换。

说明

以上维护周期仅为建议值，请根据设备的实际使用情况进行调整。

4.4 电控系统维护

电控系统的维护如表 4-3 所示。

表 4-3 电控系统维护

维护项	维护标准	维护周期	检测方式	异常处理
接线面板电源线缆、电源端子的可靠性	电气线缆和接线端子无松脱	6 个月	目测	断电 1 分钟以上后，用螺丝刀对松动线缆进行紧固。
	电气线缆无老化、破损、异常发热及其他异常	6 个月	目测	断电 1 分钟以上后，更换电源线缆。
	接线面板处无灰尘	6 个月	目测	断电 1 分钟以上后，用毛刷清理干净灰尘。

说明

以上维护周期仅为建议值，可根据实际规划进行调整。

4.5 冷凝器维护

注意

冷凝器叶片边缘锋利，请穿戴手套进行操作。

冷凝器的例行维护如表 4-4 所示。

表 4-4 冷凝器维护

维护项	维护标准	维护周期	检测方式	异常处理
冷凝器清洁	冷凝器无灰尘和异物堵塞	6 个月	目测	断电 1 分钟以上后，使用水枪对冷凝器进行冲洗。
	翅片无严重弯曲变形	6 个月	目测	断电 1 分钟以上后，用翅片梳等工具进行校正。

说明

以上维护周期仅为建议值，可根据实际规划进行调整。

5 故障管理

说明

涉及专业的故障维修时请勿私自操作，请拨打免费服务热线 400-188-8966 联系产品售后客户服务中心进行咨询。

5.1 风机故障

风机类常见故障及维修方法如表 5-1 所示。

表 5-1 风机故障

故障现象	可能原因	检查和维修
内循环风机不运行	空调未上电	检查电路开路或短路处并进行维修。
	空调电源输入异常，如：电源过压、欠压	查看显示屏确定空调是否存在相应告警。
	风机卡死	检查是否有其他部件阻碍风机运行，或风机内存在异物。
	端子松脱	检查风机接线端子是否松脱。
	风机损坏	若存在内循环风机故障告警，且电源接线无异常，风机无异物卡住，则可能为风机损坏，需更换风机。
	主控板故障	若排除以上可能原因，请检测主控板是否故障。 主控板故障时请进行更换。
风机异响	风机轴承磨损	更换风机。
	扇叶刮擦其它物体	检查是否有线缆等与风机扇叶干涉。
	风机固定螺栓松动	重新紧固风机的固定螺栓。

5.2 制冷系统故障

制冷系统类常见故障及维修方法如表 5-2 所示。

表 5-2 制冷故障

故障现象	可能原因	检查和维修
压缩机未启动	电路连接松动	紧固电路接头。
	电路开路或短路	检查电路开路或短路处，并维修总电源。
	控制板/驱动板损坏	更换控制板或驱动板。

故障现象	可能原因	检查和维修
	压缩机电机故障	更换压缩机。
	其他异常告警	查看通讯后台确定空调是否存在其他异常告警。

5.3 部件更换

5.3.1 更换水盘管制冷风机

前提条件

- 已切断电源至少 1 分钟。
- 已参考表 3-2 准备好螺丝刀，并准备好备件。

背景信息

外循环风机的更换操作如图 5-1 所示。

图 5-1 更换制冷风机

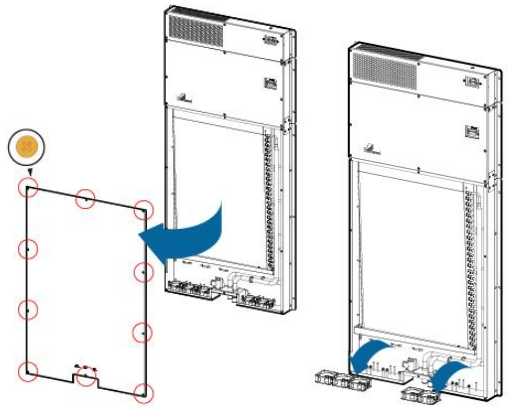

操作步骤

步骤 1 拆除机柜空调的室外侧盖板。

步骤 2 拆除外循环风机的电气接线端子。

步骤 3 拆除外循环风机支架上的固定螺钉。

步骤 4 拆除风机与支架间的固定螺钉。

步骤 5 取出外循环风机进行更换。

步骤 6 按照“步骤 4”至“步骤 1”的反向顺序安装，完成部件更换。

5.3.2 更换内循环风机（除湿风机）

前提条件

- 已切断电源至少 1 分钟。
- 已参考表 3-2 准备好螺丝刀，并准备好备件。

背景信息

内循环风机的更换操作如图 5-2 所示。

图 5-2 更换内循环风机

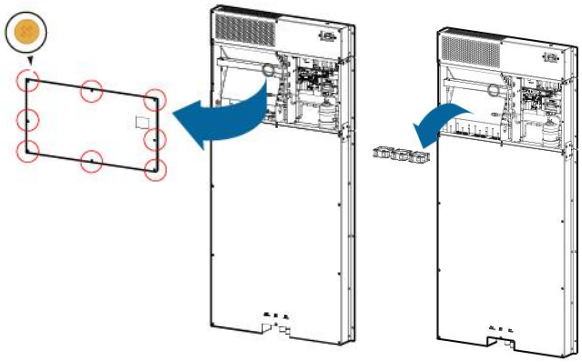

操作步骤

步骤 1 首先拆除机柜空调的室内侧盖板。

步骤 2 拆除内循环风机的电气接线端子和风机支架上的固定螺钉。

步骤 3 取出机柜空调内侧盖板（含风机）。

步骤 4 拆除内循环风机与盖板间的固定螺钉。

步骤 5 取出内循环风机进行更换。

步骤 6 按照“步骤 4”至“步骤 1”的反向顺序安装，完成部件更换。

5.3.3 更换电控组件

前提条件

- 已切断电源至少 1 分钟。
- 已参考表 3-2 准备好螺丝刀，并准备好备件。

背景信息

电控模块包括控制板、驱动板等多个电控组件，不同型号空调器的电控模块组成和布局等可能存在差异。电控组件更换操作类似，图 5-3 以更换控制板为例进行说明。

图 5-3 更换控制板

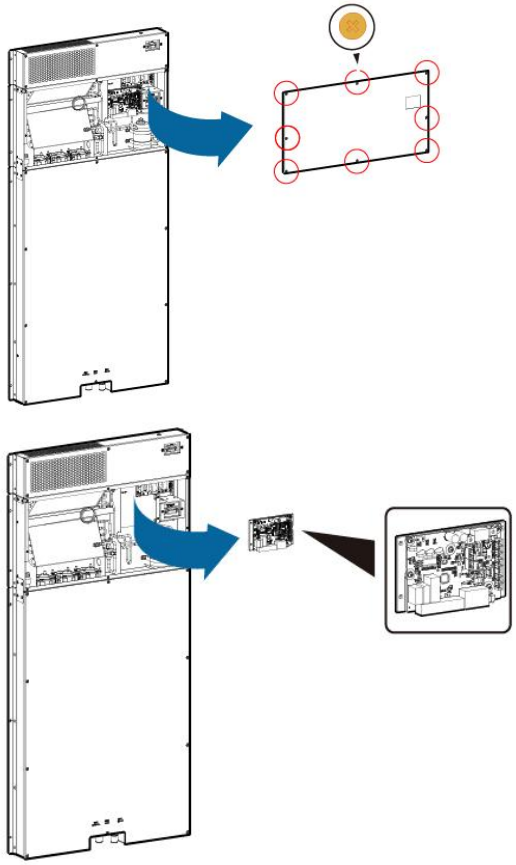

操作步骤

步骤 1 拆除机柜空调的室内侧盖板。

步骤 2 拆除控制板上的电气线缆。

建议拆除线缆前进行拍照，方便后续安装时参考。

步骤 3 拆除控制板的固定螺钉。

步骤 4 取出控制板进行更换。

步骤 5 按照“步骤 4”至“步骤 1”的反向顺序安装，完成部件更换。

5.3.4 更换压缩机

注意

- 压缩机更换请联系厂家售后处理，严禁私自更换，避免错误操作导致机组运行异常。
- 严禁将该故障的压缩机作为未分类的城市垃圾处理，必须遵循相关要求独立处理。

5.4 告警处理

机柜空调的告警信息如表 5-3 所示。

锁定类告警（如下表中的“高压锁定”）需通过对机组先断电再上电的方式手工解除，其余告警在当前场景不满足告警条件时自动解除。

表 5-3 告警列表

告警项	告警产生条件	排查方法	故障处理
高温告警	机柜内温度高于高温告警点设定值	4.检查高温告警设定值是否合理。 5.检查是否出现其他异常告警。 6.检查机组制冷量是否满足需求。	3.根据实际规划调整取值。 4.参考故障告警对应的处理方法。 3.增加空调数量。
内温感故障	室内机回风口的温度传感器工作异常	检查温度传感器接线是否断路或短路。	根据接线图正确接线，如果线缆破损则进行更换。
压缩机故障	压缩机运行异常	检查压缩机是否能启动，运行是否正常。	更换压缩机。
详细告警请参考我司《通讯协议》，如有疑问请与我们技术联系。			

6 参考

空调的条形码样例如图 6-1 所示。

图 6-1 机组条形码样例

- 前 15 位：厂家自定义（M01110112000001）。
- 第 16~20 位：生产日期，如 13701 表示 2013 年 7 月 1 日。A/B/C 表示 10 月/11 月/12 月。
- 最后 4 位：本批次产品的序列号。

Declaration:

All rights reserved. Any unauthorized copying and plagiarism are prohibited.
No further notice will be given for the data changes made by the manufacturer for the continuous upgrading of products.

声明：

版权所有，禁止任何未经授权的拷贝和抄袭。
厂家对产品持续升级进行的资料更改，恕不另行通知。

Shenzhen Envicool Technology Co., Ltd.

Address:	Building 9, Hongxin Industrial Park, Guanlan Street, Longhua District, Shenzhen, China
Tel:	(86)755-29588896
Fax:	(86)755-29588895
Website:	www.envicool.com

深圳市英维克科技股份有限公司

地址：	深圳市龙华区观澜街道鸿信工业园 9 栋
电话：	(86)755-29588896
传真：	(86)755-29588895
网址：	www.envicool.com