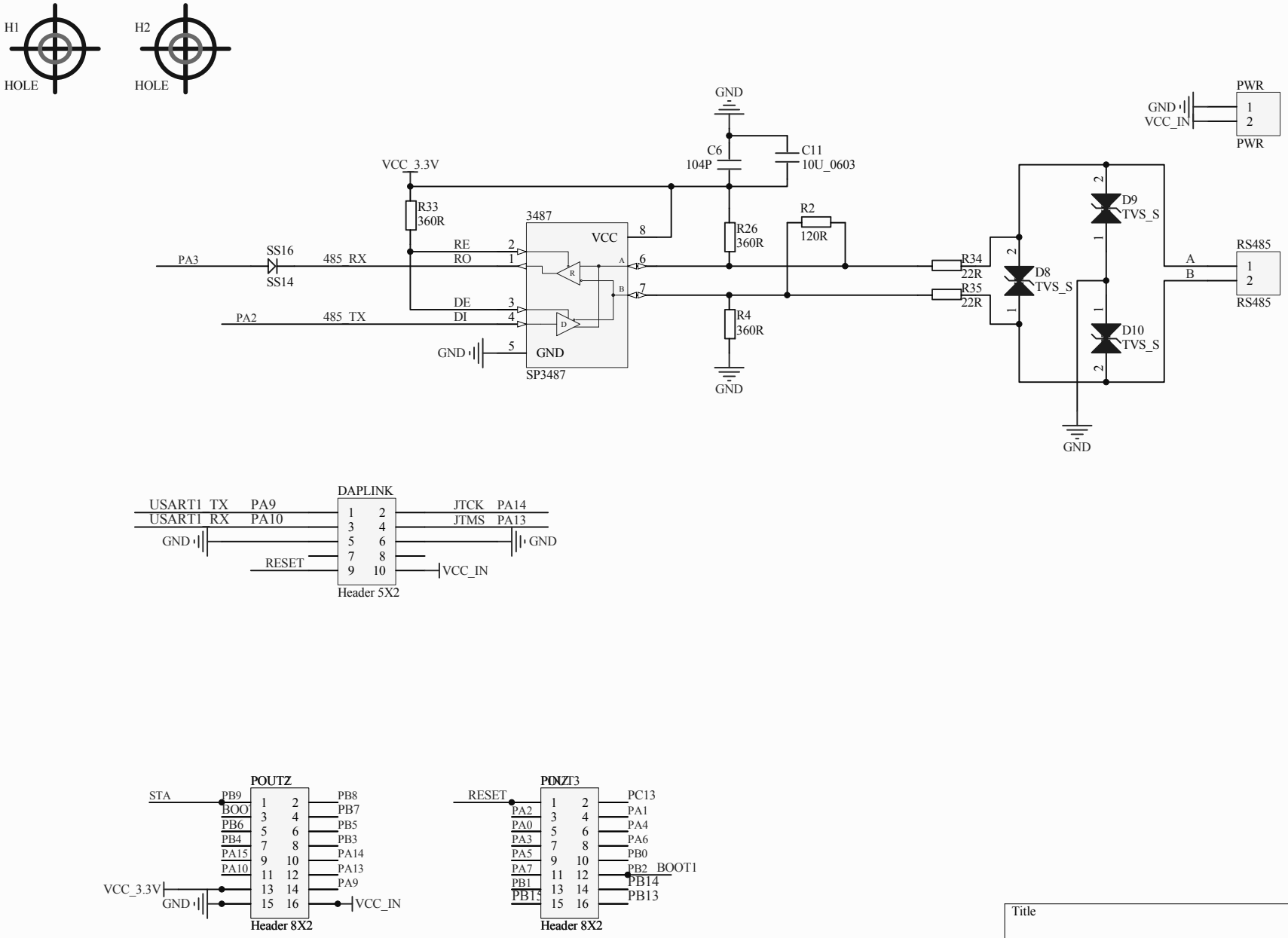

Title		
Size A4	Number	Revision
Date: 2023/10/23		Sheet of
File: E:\PCB RELEASE 最终版本\..\配套底板原理图.SCHDOC		Drawn By: