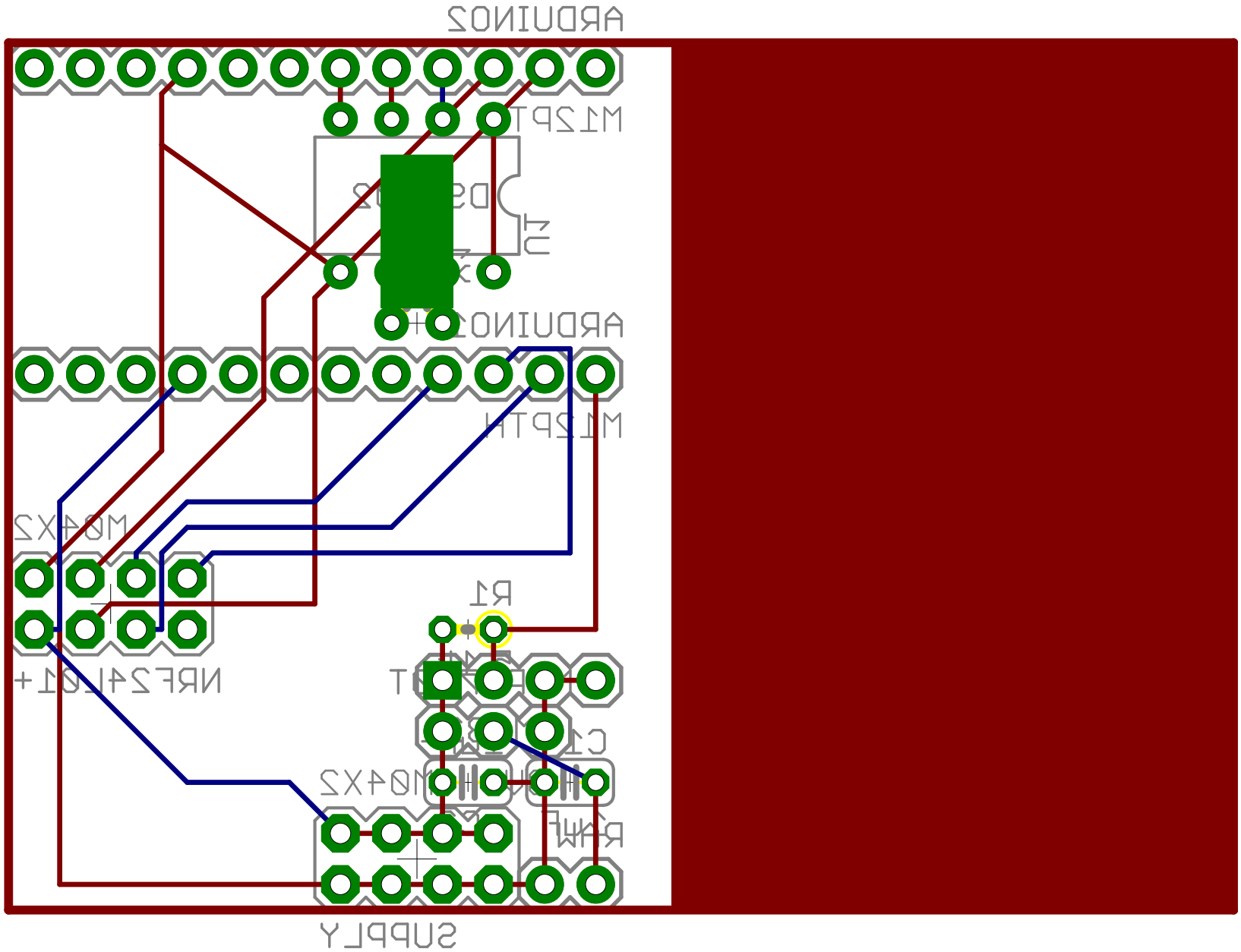


13-5-3 上午11:33 f=3.50 mirrored /Users/wangdong/ws/arduino/laputa-pod/cpod/layout/cpod-MCP1700-AM2321.brd