Revision History

Version	Date	By	Change Dsecription	Approved
V1.0	2022-02-21		1:Revision preliminary version	

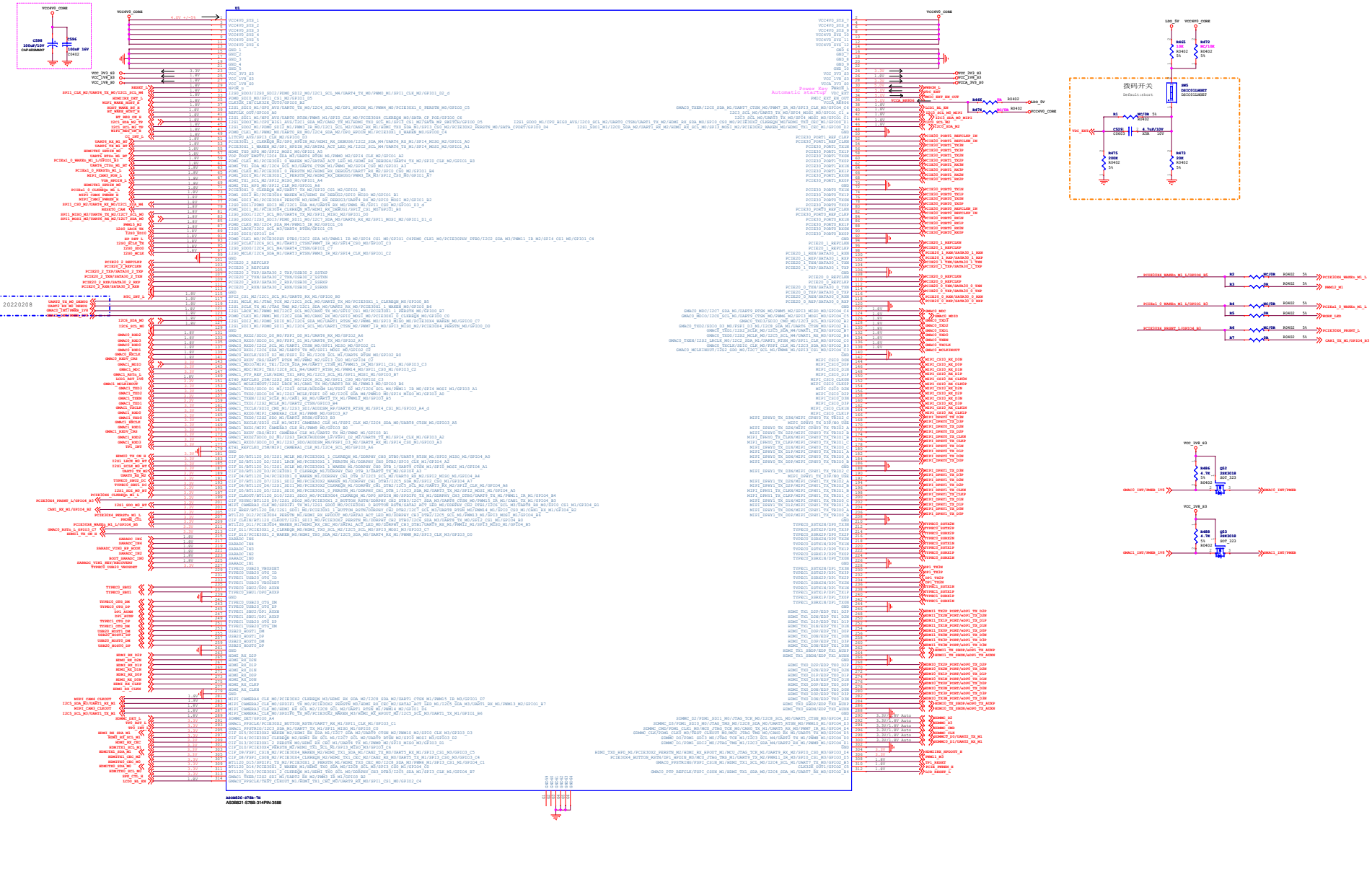

Firefly	www.t-firefly.com
Title:	MXM Connector
File:	RK-3588-EB3588EVZ
REV: V1.0	
Create Date:	Thursday, January 06, 2022
Page Name: 2	
Modify Date:	Friday, November 01, 2024
Page Total: 31	

DC_IN

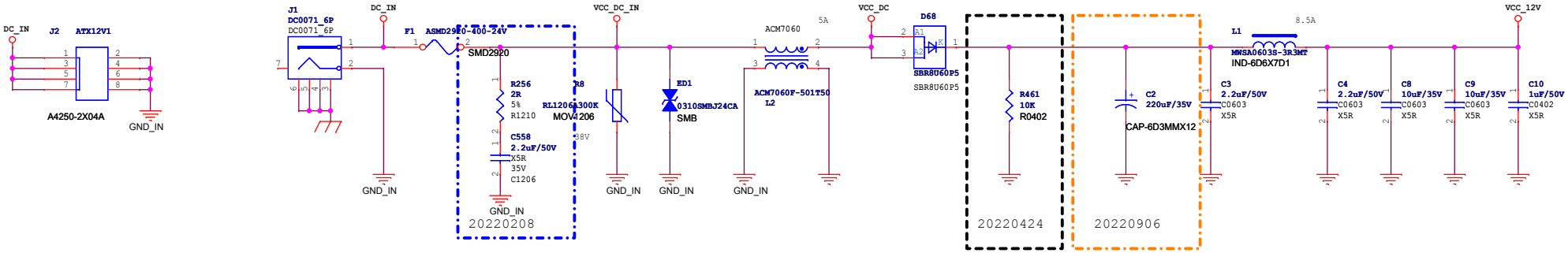

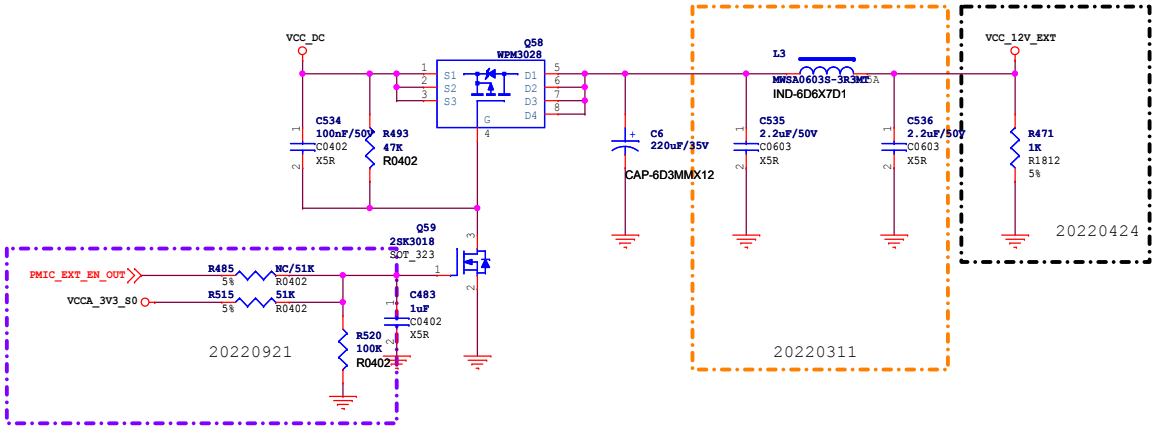

SATA_POWER

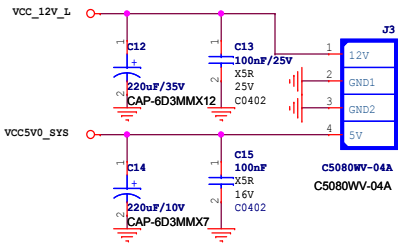

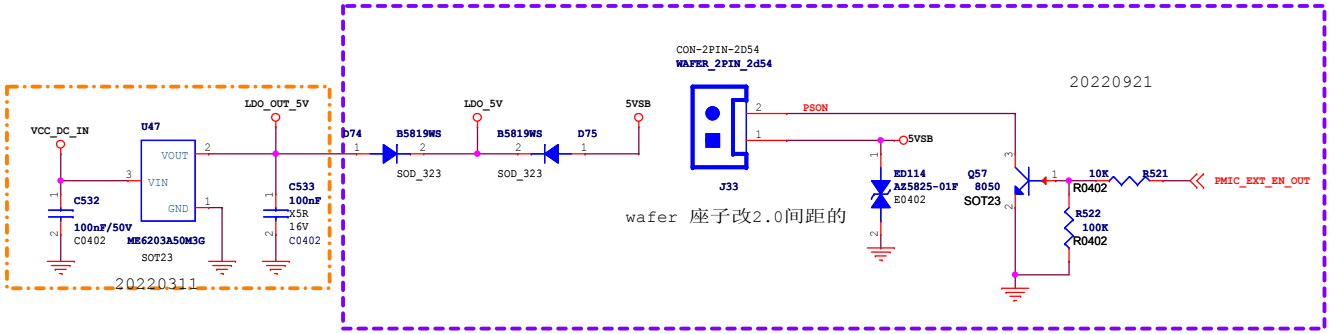

www.t-firefly.com

Title:	POWER DCIN	
File:	MB-JM3-RK3588ITX	REV: V1.0
Create Date:	Monday, May 10, 2021	Page Num: 3
Modify Date:	Friday, November 01, 2024	Page Total: 31

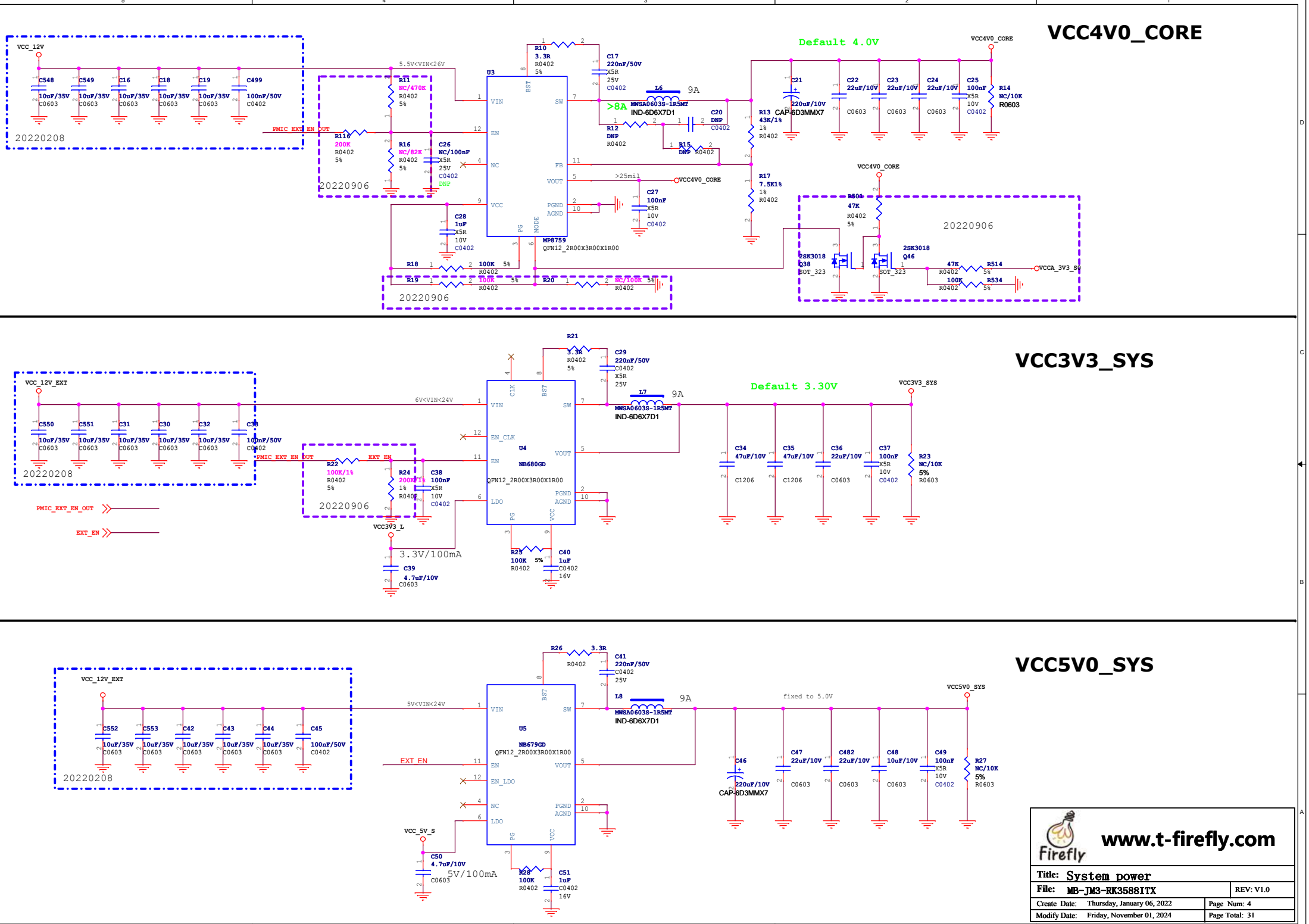
VCC4V0_CORE
Default 4.0V
VCC_12V
5.5V<VIN<26V
U3
MP8759
QFN12_2R00X3R00X1R00
L6
9A
>8A
MWSA0603S-1R5MT
IND-6D6X7D1
VCC4V0_CORE
PMIC_EXT_EN_OUT
20220208
20220906
VCC3V3_SYS
Default 3.30V
VCC_12V_EXT
6V<VIN<24V
U4
NB680GD
QFN12_2R00X3R00X1R00
L7
9A
MWSA0603S-1R5MT
IND-6D6X7D1
EXT_EN
VCC3V3_L
3.3V/100mA
VCC5V0_SYS
VCC_12V_EXT
5V<VIN<24V
U5
NB679GD
QFN12_2R00X3R00X1R00
L8
9A
MWSA0603S-1R5MT
IND-6D6X7D1
fixed to 5.0V
EXT_EN
VCC_5V_S
5V/100mA
VCC5V0_SYS
www.t-firefly.com
Firefly
Title: System power
File: MB-JM3-RK3588ITX
REV: V1.0
Create Date: Thursday, January 06, 2022
Page Num: 4
Modify Date: Friday, November 01, 2024
Page Total: 31

TF CARD

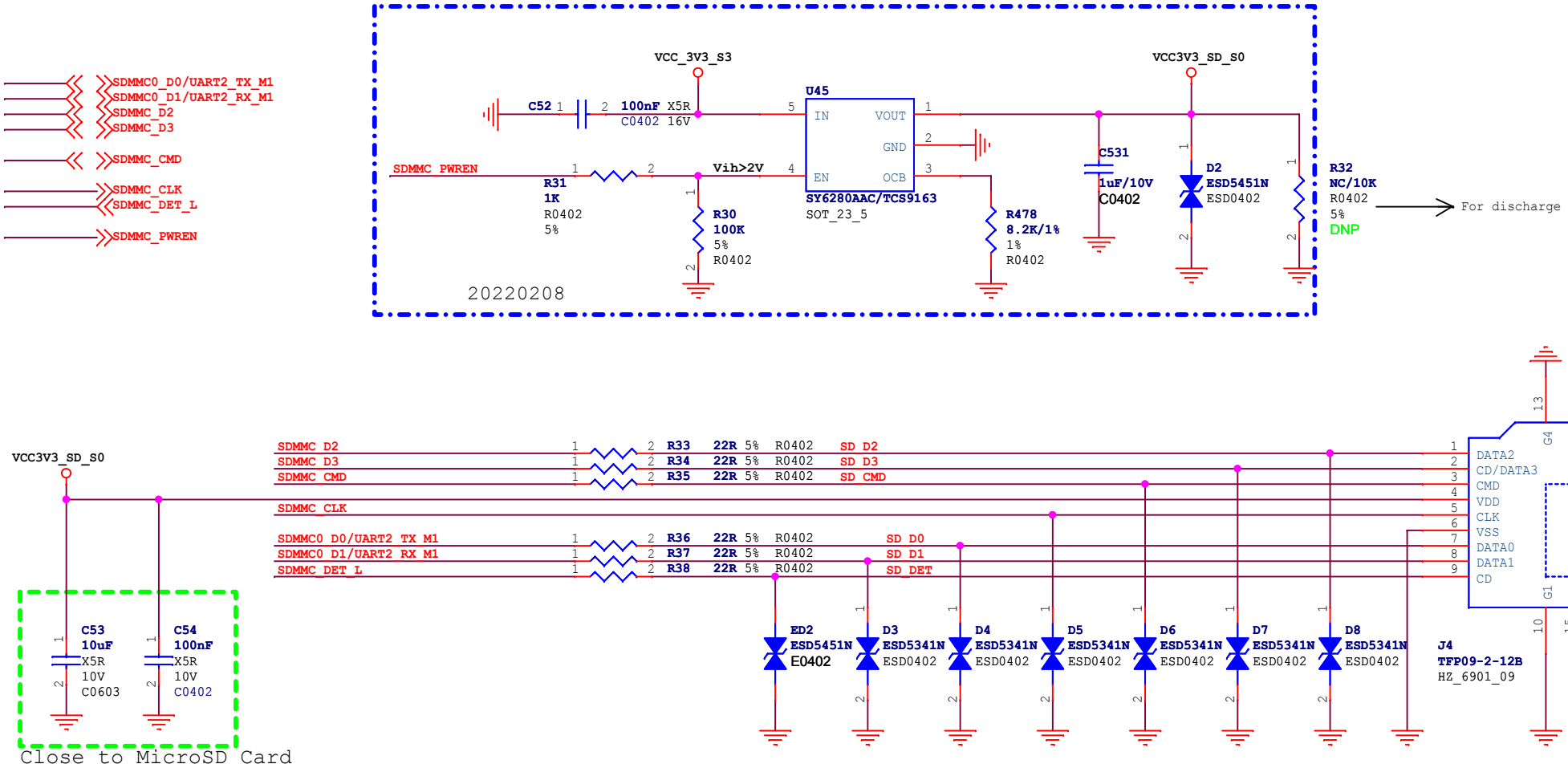

MicroSD Card

www.t-firefly.com

Title:	Flash-TF Card	
File:	MB-JM3-RK3588ITX	REV:V1.0
Create Date:	Thursday, January 06, 2022	Page Num:5
Modify Date:	Friday, November 01, 2024	Page Total: 31

SATA PM

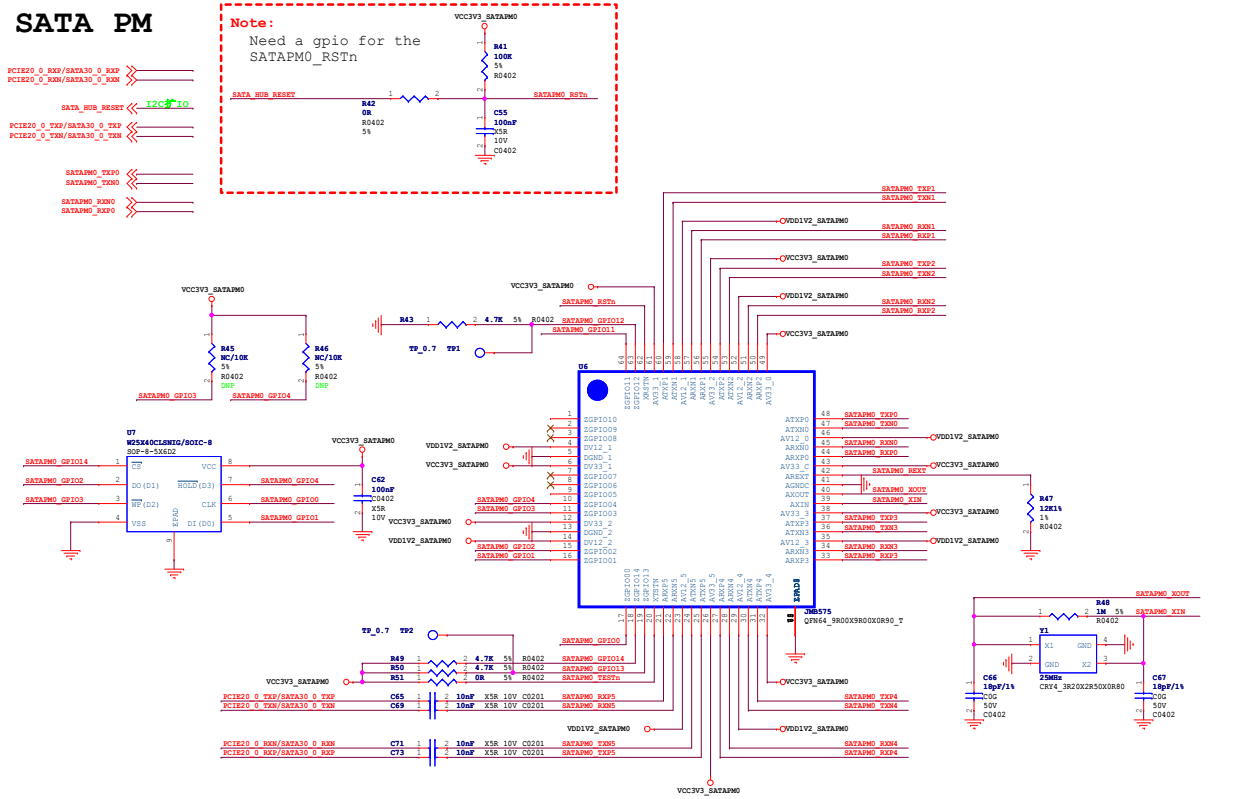

SATA PM0 Port4

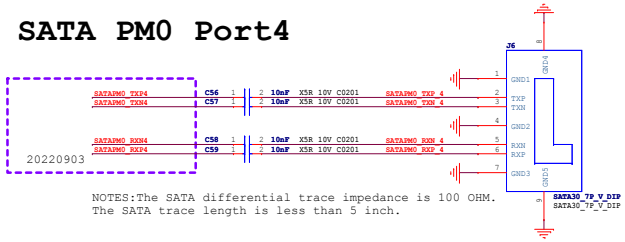

NOTES:The SATA differential trace impedance is 100 OHM.
The SATA trace length is less than 5 inch.

SATA PM0 Port1

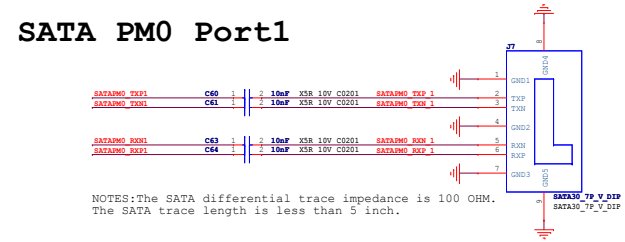

NOTES:The SATA differential trace impedance is 100 OHM.
The SATA trace length is less than 5 inch.

SATA PM0 Port2

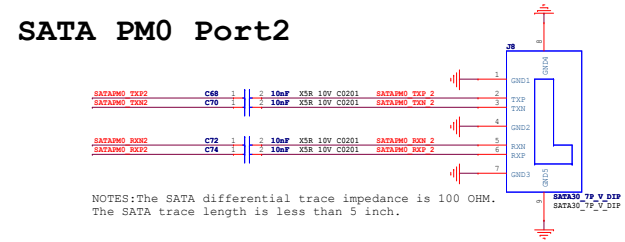

NOTES:The SATA differential trace impedance is 100 OHM.
The SATA trace length is less than 5 inch.

SATA PM0 Port3

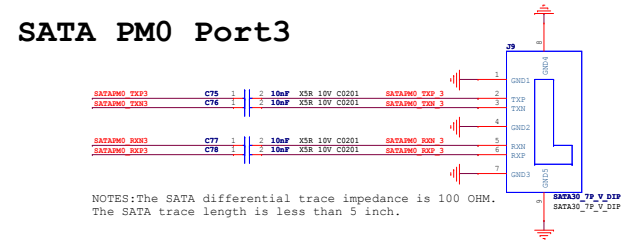

NOTES:The SATA differential trace impedance is 100 OHM.
The SATA trace length is less than 5 inch.

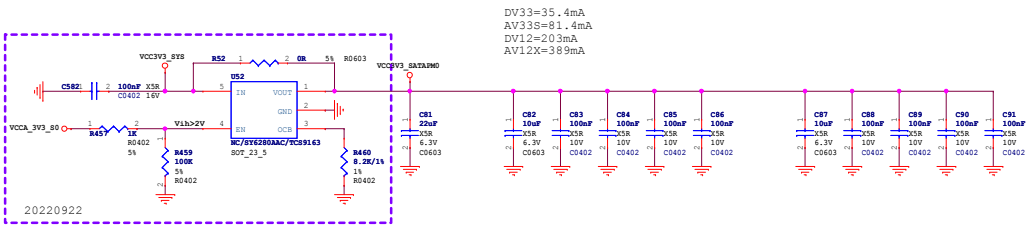

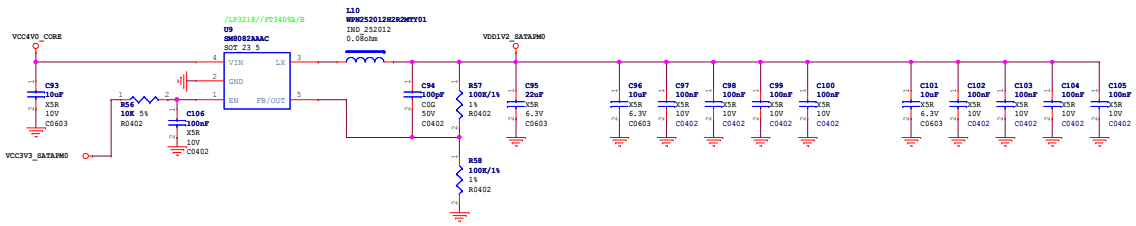

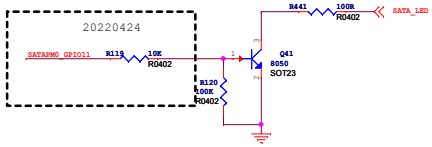

www.t-firefly.com

Title:	SATA-SATA PM0
File:	MB-JM3-RK3588ITX
REV: V1.0	
Create Date:	Thursday, January 06, 2022
Page Num: 6	
Modify Date:	Friday, November 01, 2024
Page Total: 31	

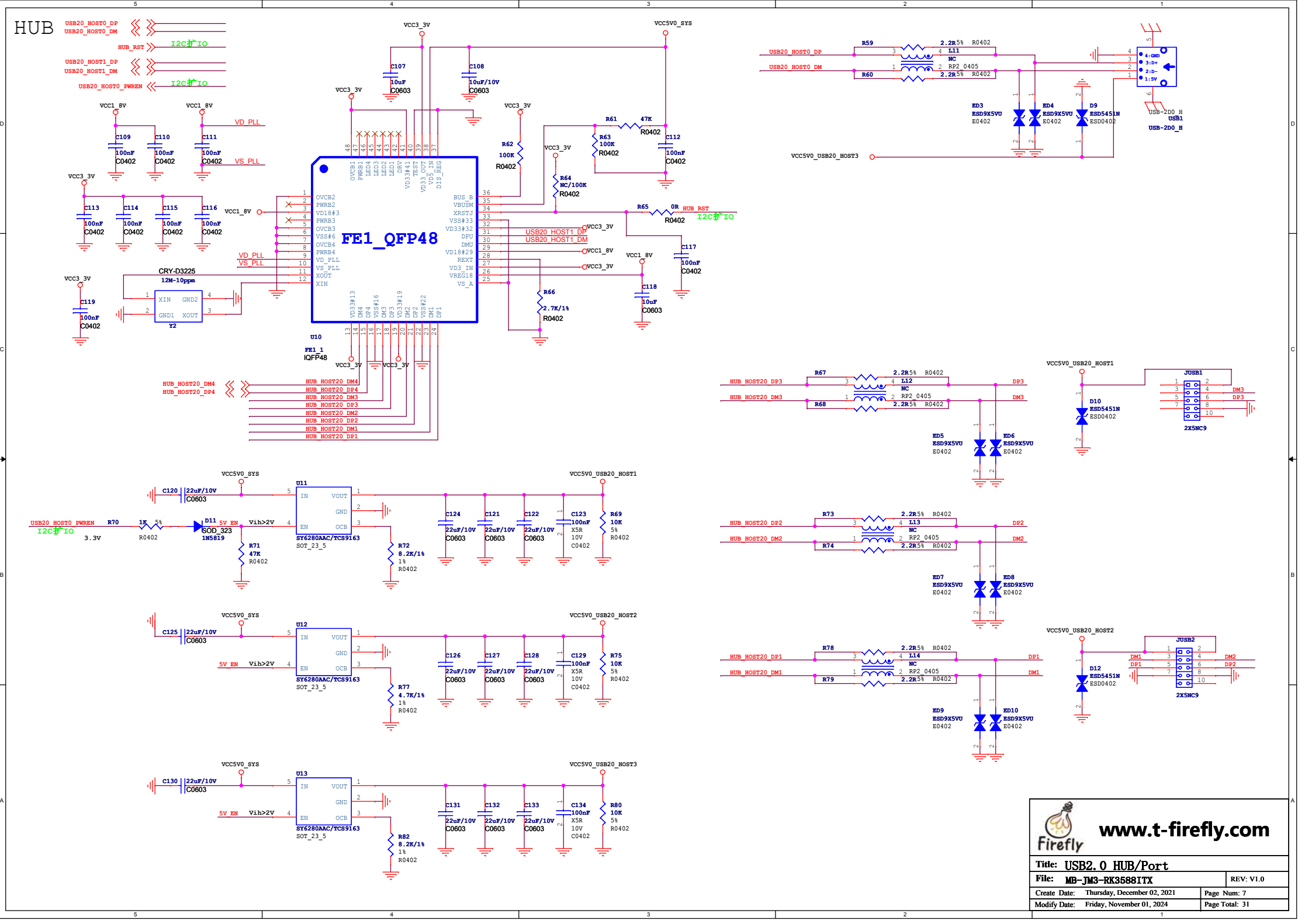
HUB
FE1_QFP48
U10
FE1_1
IQFP48
CRY-D3225
12M-10ppm
Y2
VCC3_3V
VCC5V0_SYS
VCC1_8V
VD_PLL
VS_PLL
USB20_HOST0_DP
USB20_HOST0_DM
HUB_RST
USB20_HOST1_DP
USB20_HOST1_DM
USB20_HOST0_PWREN
I2C扩IO
VCC5V0_USB20_HOST3
USB-2D0_H
USB1
JUSB1
JUSB2
2X5NC9
HUB_HOST20_DP3
HUB_HOST20_DM3
HUB_HOST20_DP2
HUB_HOST20_DM2
HUB_HOST20_DP1
HUB_HOST20_DM1
HUB_HOST20_DM4
HUB_HOST20_DP4
VCC5V0_USB20_HOST1
VCC5V0_USB20_HOST2
U11
U12
U13
SY6280AAC/TCS9163
SOT_23_5
5V_EN
Vih>2V
USB20_HOST0_PWREN
3.3V
www.t-firefly.com
Firefly
Title: USB2.0 HUB/Port
File: MB-JM3-RK3588ITX
REV: V1.0
Create Date: Thursday, December 02, 2021
Modify Date: Friday, November 01, 2024
Page Num: 7
Page Total: 31

USB3.0 HUB

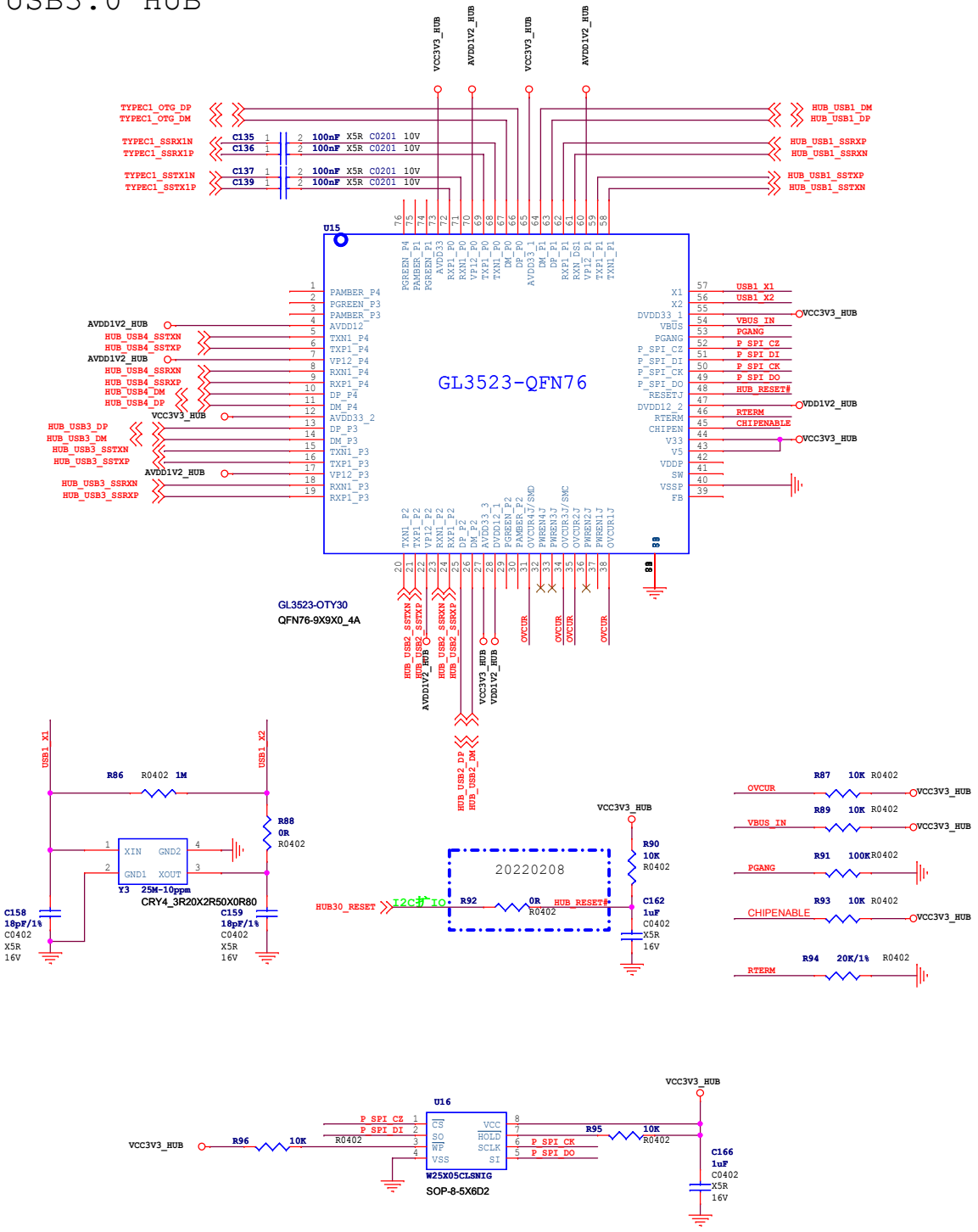

HUB_POWER

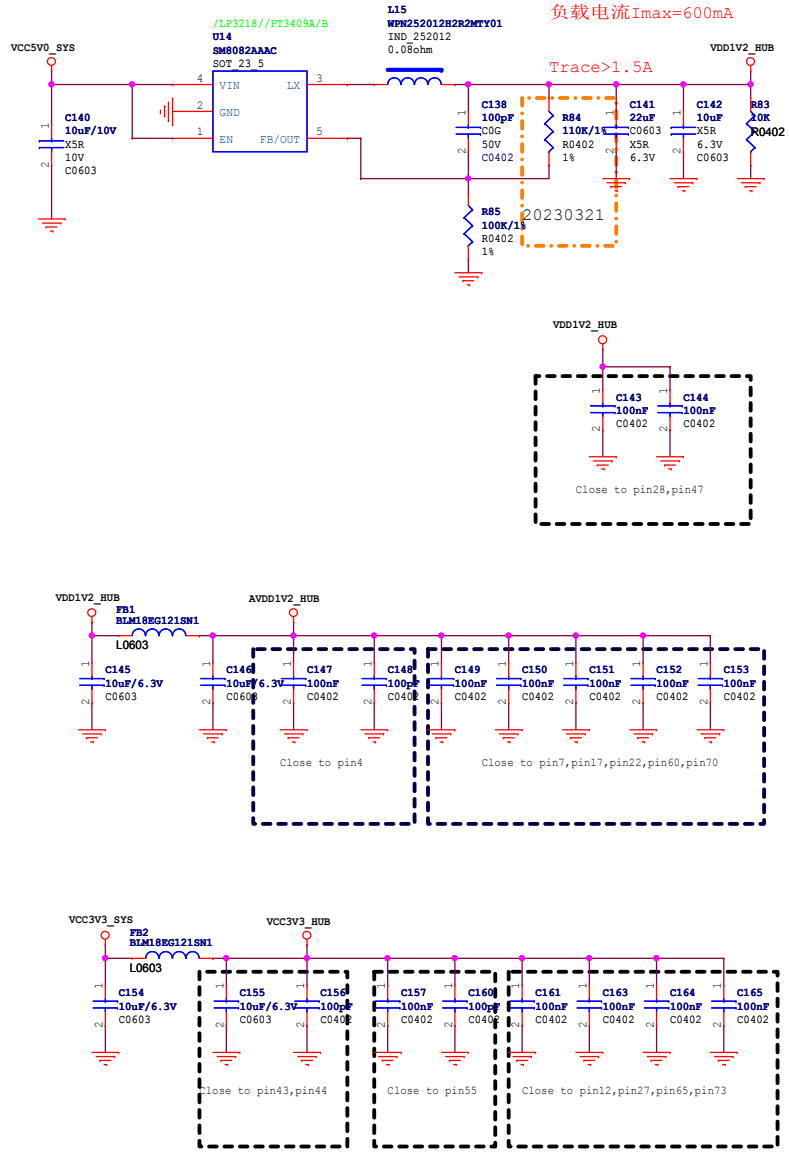

www.t-firefly.com

Title: USB3.0 HUB	
File: MB-JM3-RK3588ITX	REV: V1.0
Create Date: Monday, May 10, 2021	Page Num: 8
Modify Date: Friday, November 01, 2024	Page Total: 31

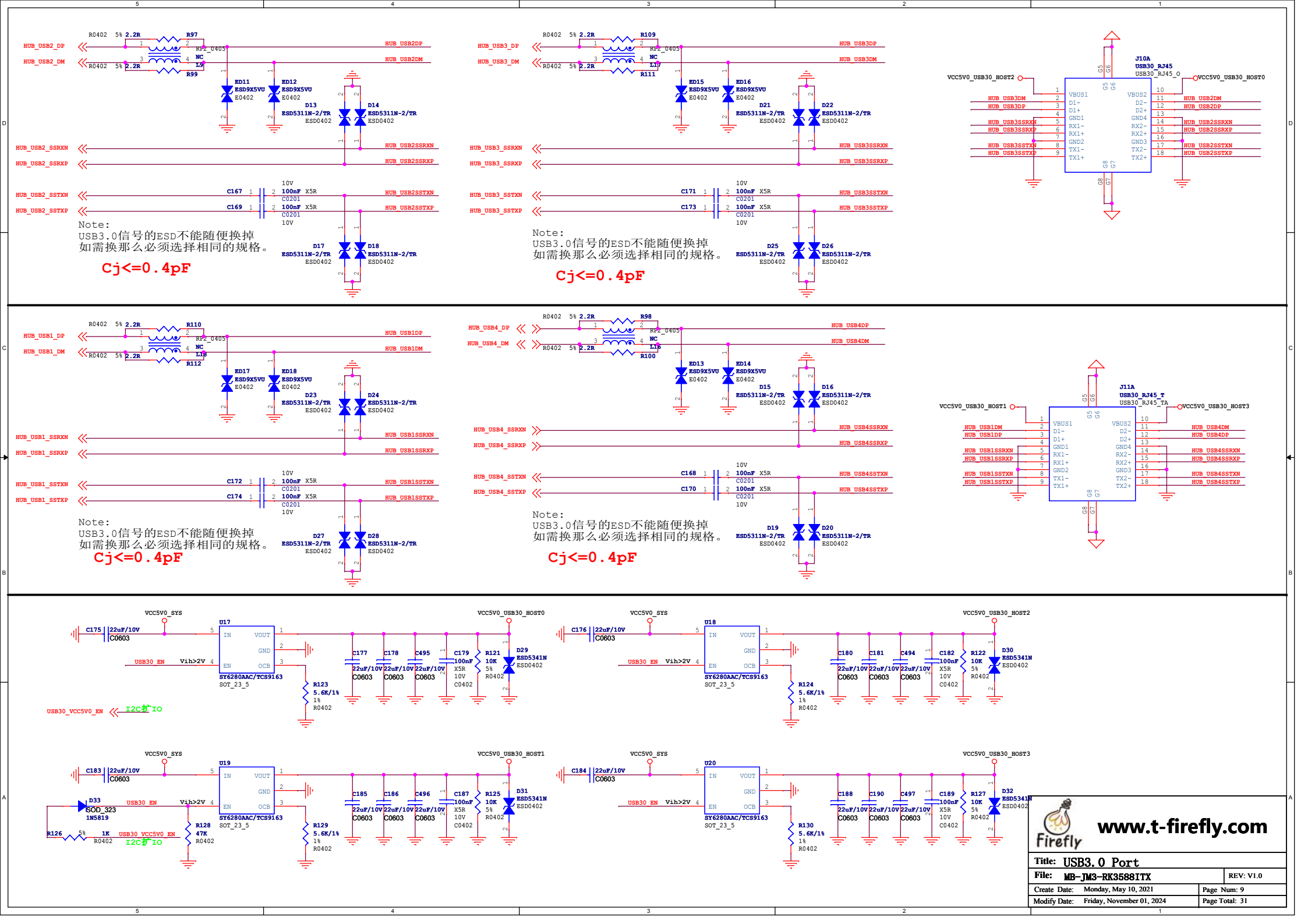
HUB_USB2_DP
HUB_USB2_DM
R97
R99
RF2_0405
HUB_USB2DP
HUB_USB2DM
ED11 ESD9X5VU E0402
ED12 ESD9X5VU E0402
D13 ESD5311N-2/TR ESD0402
D14 ESD5311N-2/TR ESD0402
HUB_USB2_SSRXN
HUB_USB2_SSRXP
HUB_USB2SSRXN
HUB_USB2SSRXP
HUB_USB2_SSTXN
HUB_USB2_SSTXP
C167 100nF X5R C0201 10V
C169 100nF X5R C0201 10V
HUB_USB2SSTXN
HUB_USB2SSTXP
D17 ESD5311N-2/TR ESD0402
D18 ESD5311N-2/TR ESD0402
Note:
USB3.0信号的ESD不能随便换掉
如需换那么必须选择相同的规格。
Cj<=0.4pF
HUB_USB3_DP
HUB_USB3_DM
R109
R111
HUB_USB3DP
HUB_USB3DM
ED15 ESD9X5VU E0402
ED16 ESD9X5VU E0402
D21 ESD5311N-2/TR ESD0402
D22 ESD5311N-2/TR ESD0402
HUB_USB3_SSRXN
HUB_USB3_SSRXP
HUB_USB3SSRXN
HUB_USB3SSRXP
HUB_USB3_SSTXN
HUB_USB3_SSTXP
C171 100nF X5R C0201 10V
C173 100nF X5R C0201 10V
HUB_USB3SSTXN
HUB_USB3SSTXP
D25 ESD5311N-2/TR ESD0402
D26 ESD5311N-2/TR ESD0402
Note:
USB3.0信号的ESD不能随便换掉
如需换那么必须选择相同的规格。
Cj<=0.4pF
VCC5V0_USB30_HOST2
J10A
USB30_RJ45
USB30_RJ45_O
VCC5V0_USB30_HOST0
VBUS1 D1- D1+ GND1 RX1- RX1+ GND2 TX1- TX1+
VBUS2 D2- D2+ GND4 RX2- RX2+ GND3 TX2- TX2+
HUB_USB3DM
HUB_USB3DP
HUB_USB3SSRXN
HUB_USB3SSRXP
HUB_USB3SSTXN
HUB_USB3SSTXP
HUB_USB2DM
HUB_USB2DP
HUB_USB2SSRXN
HUB_USB2SSRXP
HUB_USB2SSTXN
HUB_USB2SSTXP
HUB_USB1_DP
HUB_USB1_DM
R110
R112
HUB_USB1DP
HUB_USB1DM
ED17 ESD9X5VU E0402
ED18 ESD9X5VU E0402
D23 ESD5311N-2/TR ESD0402
D24 ESD5311N-2/TR ESD0402
HUB_USB1_SSRXN
HUB_USB1_SSRXP
HUB_USB1SSRXN
HUB_USB1SSRXP
HUB_USB1_SSTXN
HUB_USB1_SSTXP
C172 100nF X5R C0201 10V
C174 100nF X5R C0201 10V
HUB_USB1SSTXN
HUB_USB1SSTXP
D27 ESD5311N-2/TR ESD0402
D28 ESD5311N-2/TR ESD0402
Note:
USB3.0信号的ESD不能随便换掉
如需换那么必须选择相同的规格。
Cj<=0.4pF
HUB_USB4_DP
HUB_USB4_DM
R98
R100
HUB_USB4DP
HUB_USB4DM
ED13 ESD9X5VU E0402
ED14 ESD9X5VU E0402
D15 ESD5311N-2/TR ESD0402
D16 ESD5311N-2/TR ESD0402
HUB_USB4_SSRXN
HUB_USB4_SSRXP
HUB_USB4SSRXN
HUB_USB4SSRXP
HUB_USB4_SSTXN
HUB_USB4_SSTXP
C168 100nF X5R C0201 10V
C170 100nF X5R C0201 10V
HUB_USB4SSTXN
HUB_USB4SSTXP
D19 ESD5311N-2/TR ESD0402
D20 ESD5311N-2/TR ESD0402
Note:
USB3.0信号的ESD不能随便换掉
如需换那么必须选择相同的规格。
Cj<=0.4pF
VCC5V0_USB30_HOST1
J11A
USB30_RJ45_T
USB30_RJ45_TA
VCC5V0_USB30_HOST3
HUB_USB1DM
HUB_USB1DP
HUB_USB1SSRXN
HUB_USB1SSRXP
HUB_USB1SSTXN
HUB_USB1SSTXP
HUB_USB4DM
HUB_USB4DP
HUB_USB4SSRXN
HUB_USB4SSRXP
HUB_USB4SSTXN
HUB_USB4SSTXP
VCC5V0_SYS
C175 22uF/10V C0603
U17
IN VOUT GND EN OCB
SY6280AAC/TCS9163
SOT_23_5
USB30_EN
Vih>2V
USB30_VCC5V0_EN
I2C扩IO
R123 5.6K/1% 1% R0402
C177 22uF/10V C0603
C178 22uF/10V C0603
C495 22uF/10V C0603
C179 100nF X5R 10V C0402
R121 10K 5% R0402
D29 ESD5341N ESD0402
VCC5V0_USB30_HOST0
C176 22uF/10V C0603
U18
R124 5.6K/1% 1% R0402
C180 22uF/10V C0603
C181 22uF/10V C0603
C494 22uF/10V C0603
C182 100nF X5R 10V C0402
R122 10K 5% R0402
D30 ESD5341N ESD0402
VCC5V0_USB30_HOST2
C183 22uF/10V C0603
U19
D33 SOD_323 1N5819
R126 1K 5% R0402
R128 47K R0402
R129 5.6K/1% 1% R0402
C185 22uF/10V C0603
C186 22uF/10V C0603
C496 22uF/10V C0603
C187 100nF X5R 10V C0402
R125 10K 5% R0402
D31 ESD5341N ESD0402
VCC5V0_USB30_HOST1
C184 22uF/10V C0603
U20
R130 5.6K/1% 1% R0402
C188 22uF/10V C0603
C190 22uF/10V C0603
C497 22uF/10V C0603
C189 100nF X5R 10V C0402
R127 10K 5% R0402
D32 ESD5341N ESD0402
VCC5V0_USB30_HOST3
Firefly
www.t-firefly.com
Title: USB3.0 Port
File: MB-JM3-RK3588ITX
REV: V1.0
Create Date: Monday, May 10, 2021
Page Num: 9
Modify Date: Friday, November 01, 2024
Page Total: 31

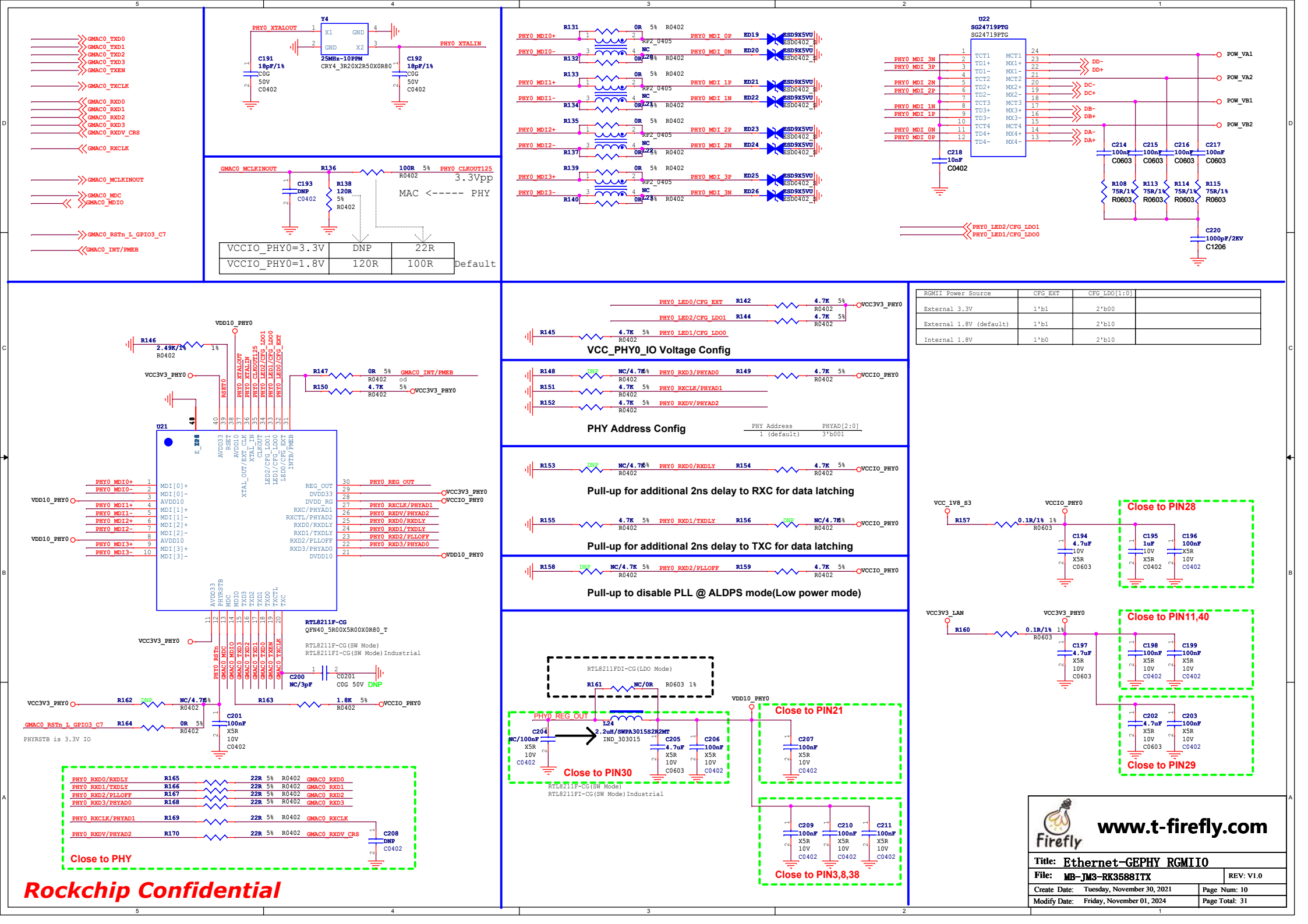

RGMII Power Source	CFG_EXT	CFG_LDO[1:0]	
External 3.3V	1'b1	2'b00	
External 1.8V (default)	1'b1	2'b10	
Internal 1.8V	1'b0	2'b10	

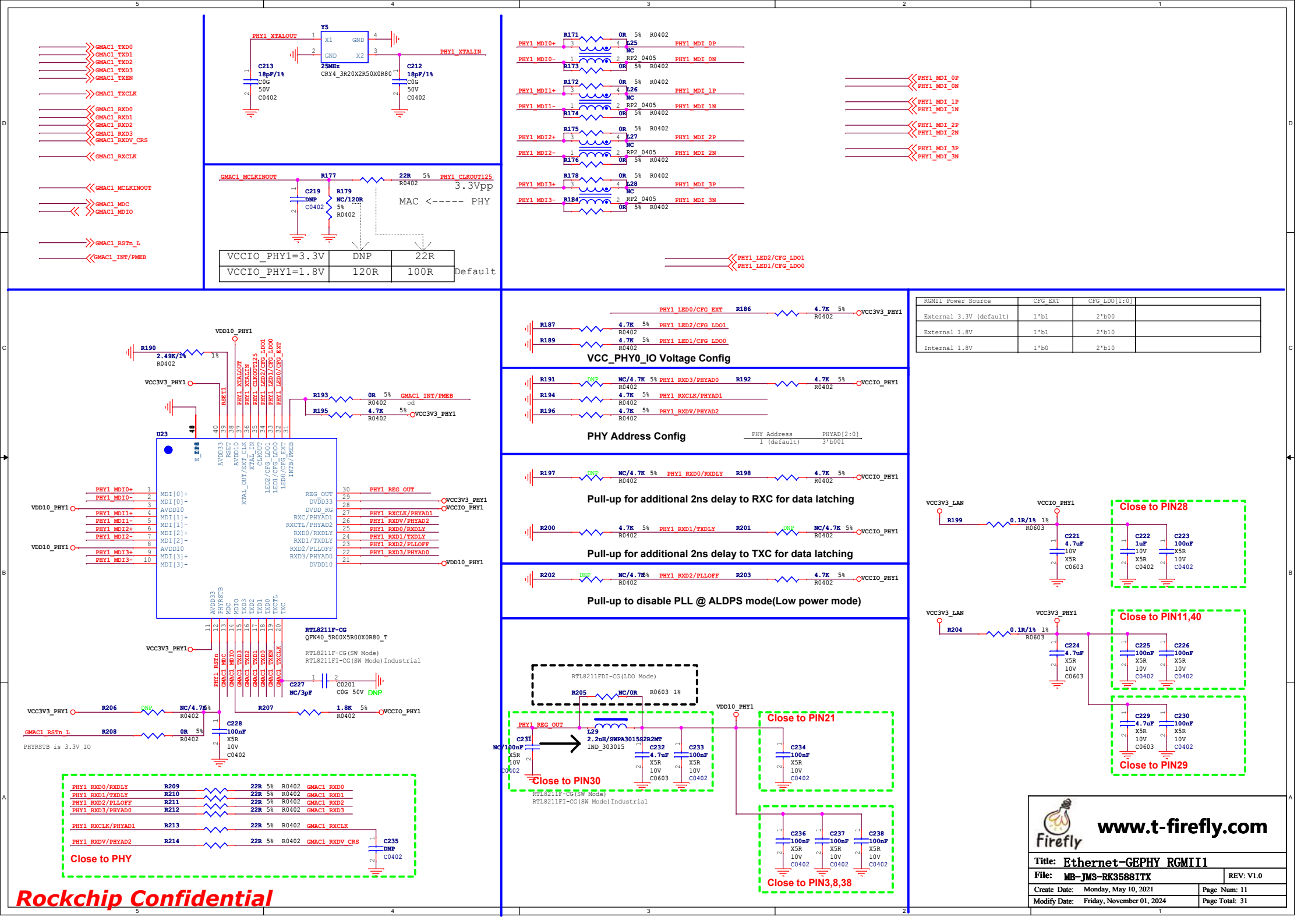
GMAC1_TXD0
GMAC1_TXD1
GMAC1_TXD2
GMAC1_TXD3
GMAC1_TXEN
GMAC1_TXCLK
GMAC1_RXD0
GMAC1_RXD1
GMAC1_RXD2
GMAC1_RXD3
GMAC1_RXDV_CRS
GMAC1_RXCLK
GMAC1_MCLKINOUT
GMAC1_MDC
GMAC1_MDIO
GMAC1_RSTn_L
GMAC1_INT/PMEB
Y5
PHY1_XTALOUT
PHY1_XTALIN
25MHz
CRY4_3R20X2R50X0R80
C213 18pF/1% C0G 50V C0402
C212 18pF/1% C0G 50V C0402
GMAC1_MCLKINOUT
R177 22R 5% R0402
PHY1_CLKOUT125
3.3Vpp
C219 DNP C0402
R179 NC/120R 5% R0402
MAC <----- PHY
VCCIO_PHY1=3.3V DNP 22R
VCCIO_PHY1=1.8V 120R 100R Default
PHY1_MDI0+ R171 0R 5% R0402 L25 NC PHY1_MDI_0P
PHY1_MDI0- R173 0R 5% R0402 RP2_0405 PHY1_MDI_0N
PHY1_MDI1+ R172 0R 5% R0402 L26 NC PHY1_MDI_1P
PHY1_MDI1- R174 0R 5% R0402 RP2_0405 PHY1_MDI_1N
PHY1_MDI2+ R175 0R 5% R0402 L27 NC PHY1_MDI_2P
PHY1_MDI2- R176 0R 5% R0402 RP2_0405 PHY1_MDI_2N
PHY1_MDI3+ R178 0R 5% R0402 L28 NC PHY1_MDI_3P
PHY1_MDI3- R184 0R 5% R0402 RP2_0405 PHY1_MDI_3N
PHY1_MDI_0P
PHY1_MDI_0N
PHY1_MDI_1P
PHY1_MDI_1N
PHY1_MDI_2P
PHY1_MDI_2N
PHY1_MDI_3P
PHY1_MDI_3N
PHY1_LED2/CFG_LDO1
PHY1_LED1/CFG_LDO0
VDD10_PHY1
R190 2.49K/1% 1% R0402
VCC3V3_PHY1
R193 0R 5% R0402 GMAC1_INT/PMEB od
R195 4.7K 5% R0402 VCC3V3_PHY1
U23
RTL8211F-CG
QFN40_5R00X5R00X0R80_T
RTL8211F-CG(SW Mode)
RTL8211FI-CG(SW Mode)Industrial
PHY1_MDI0+
PHY1_MDI0-
PHY1_MDI1+
PHY1_MDI1-
PHY1_MDI2+
PHY1_MDI2-
PHY1_MDI3+
PHY1_MDI3-
PHY1_REG_OUT
PHY1_RXCLK/PHYAD1
PHY1_RXDV/PHYAD2
PHY1_RXD0/RXDLY
PHY1_RXD1/TXDLY
PHY1_RXD2/PLLOFF
PHY1_RXD3/PHYAD0
C227 NC/3pF C0201 C0G 50V DNP
R206 DNP NC/4.7K 5% R0402
R207 1.8K 5% R0402 VCCIO_PHY1
GMAC1_RSTn_L R208 0R 5% R0402
C228 100nF X5R 10V C0402
PHYRSTB is 3.3V IO
PHY1_RXD0/RXDLY R209 22R 5% R0402 GMAC1_RXD0
PHY1_RXD1/TXDLY R210 22R 5% R0402 GMAC1_RXD1
PHY1_RXD2/PLLOFF R211 22R 5% R0402 GMAC1_RXD2
PHY1_RXD3/PHYAD0 R212 22R 5% R0402 GMAC1_RXD3
PHY1_RXCLK/PHYAD1 R213 22R 5% R0402 GMAC1_RXCLK
PHY1_RXDV/PHYAD2 R214 22R 5% R0402 GMAC1_RXDV_CRS
C235 DNP C0402
Close to PHY
PHY1_LED0/CFG_EXT R186 4.7K 5% R0402 VCC3V3_PHY1
R187 4.7K 5% R0402 PHY1_LED2/CFG_LDO1
R189 4.7K 5% R0402 PHY1_LED1/CFG_LDO0
VCC_PHY0_IO Voltage Config
R191 DNP NC/4.7K 5% R0402 PHY1_RXD3/PHYAD0 R192 4.7K 5% R0402 VCCIO_PHY1
R194 4.7K 5% R0402 PHY1_RXCLK/PHYAD1
R196 4.7K 5% R0402 PHY1_RXDV/PHYAD2
PHY Address Config
PHY Address PHYAD[2:0]
1 (default) 3'b001
R197 DNP NC/4.7K 5% R0402 PHY1_RXD0/RXDLY R198 4.7K 5% R0402 VCCIO_PHY1
Pull-up for additional 2ns delay to RXC for data latching
R200 4.7K 5% R0402 PHY1_RXD1/TXDLY R201 DNP NC/4.7K 5% R0402 VCCIO_PHY1
Pull-up for additional 2ns delay to TXC for data latching
R202 DNP NC/4.7K 5% R0402 PHY1_RXD2/PLLOFF R203 4.7K 5% R0402 VCCIO_PHY1
Pull-up to disable PLL @ ALDPS mode(Low power mode)
RTL8211FDI-CG(LDO Mode)
R205 NC/0R R0603 1%
PHY1_REG_OUT
C231 NC/100nF X5R 10V C0402
L29 2.2uH/SWPA301552R2MT IND_303015
C232 4.7uF X5R 10V C0603
C233 100nF X5R 10V C0402
Close to PIN30
RTL8211F-CG(SW Mode)
RTL8211FI-CG(SW Mode)Industrial
VDD10_PHY1
Close to PIN21
C234 100nF X5R 10V C0402
C236 100nF X5R 10V C0402
C237 100nF X5R 10V C0402
C238 100nF X5R 10V C0402
Close to PIN3,8,38
RGMII Power Source CFG_EXT CFG_LDO[1:0]
External 3.3V (default) 1'b1 2'b00
External 1.8V 1'b1 2'b10
Internal 1.8V 1'b0 2'b10
VCC3V3_LAN
VCCIO_PHY1
R199 0.1R/1% 1% R0603
C221 4.7uF 10V X5R C0603
C222 1uF 10V X5R C0402
C223 100nF X5R 10V C0402
Close to PIN28
VCC3V3_LAN
VCC3V3_PHY1
R204 0.1R/1% 1% R0603
C224 4.7uF X5R 10V C0603
C225 100nF X5R 10V C0402
C226 100nF X5R 10V C0402
Close to PIN11,40
C229 4.7uF X5R 10V C0603
C230 100nF X5R 10V C0402
Close to PIN29
Firefly
www.t-firefly.com
Title: Ethernet-GEPHY RGMII1
File: MB-JM3-RK3588ITX
REV: V1.0
Create Date: Monday, May 10, 2021
Page Num: 11
Modify Date: Friday, November 01, 2024
Page Total: 31
Rockchip Confidential

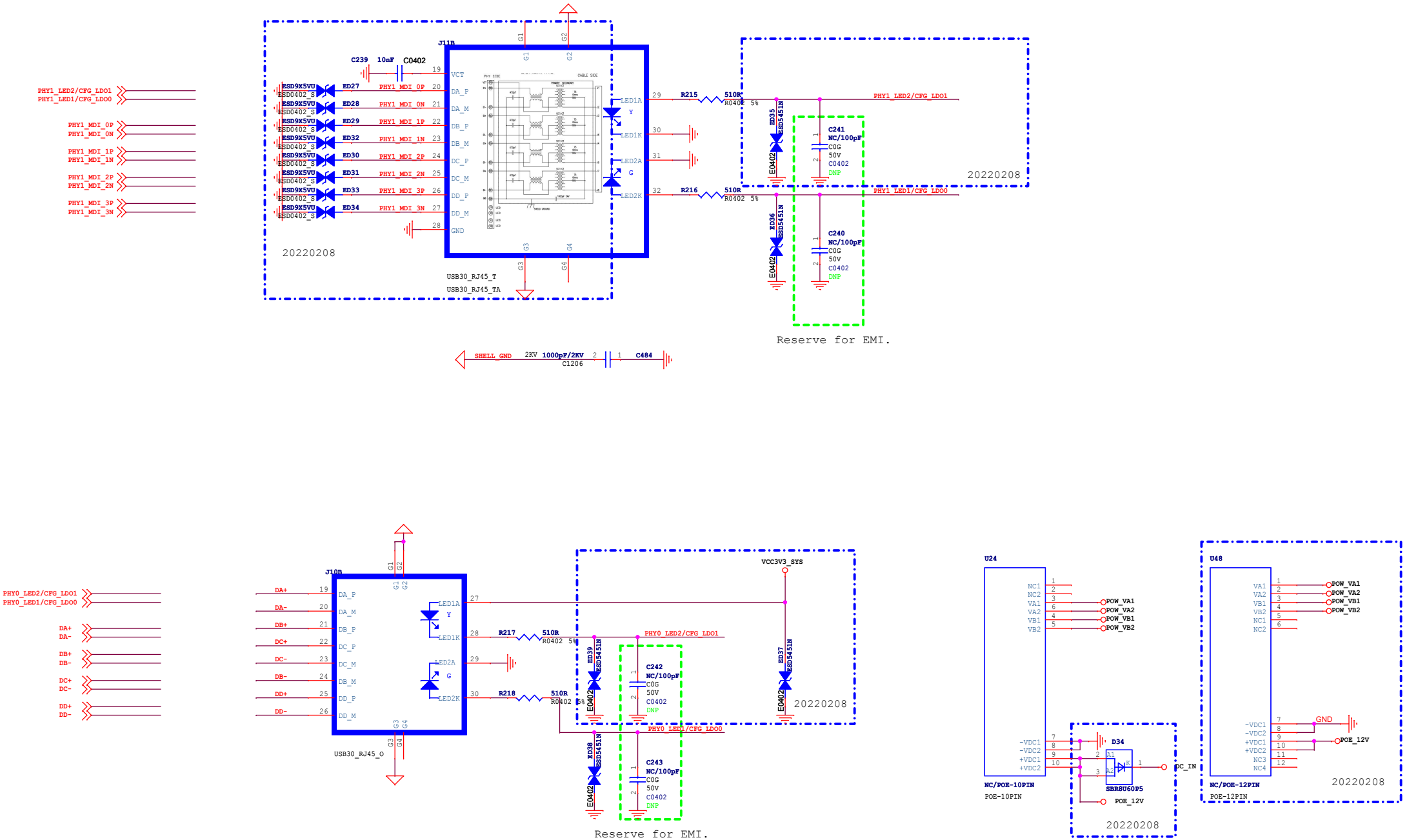

www.t-firefly.com

Title:	RJ45/POE MODULE
File:	MB-JM3-RK3588ITX
REV: V1.0	
Create Date:	Friday, December 10, 2021
Page Num: 12	
Modify Date:	Friday, November 01, 2024
Page Total: 31	

CODEC ES8388

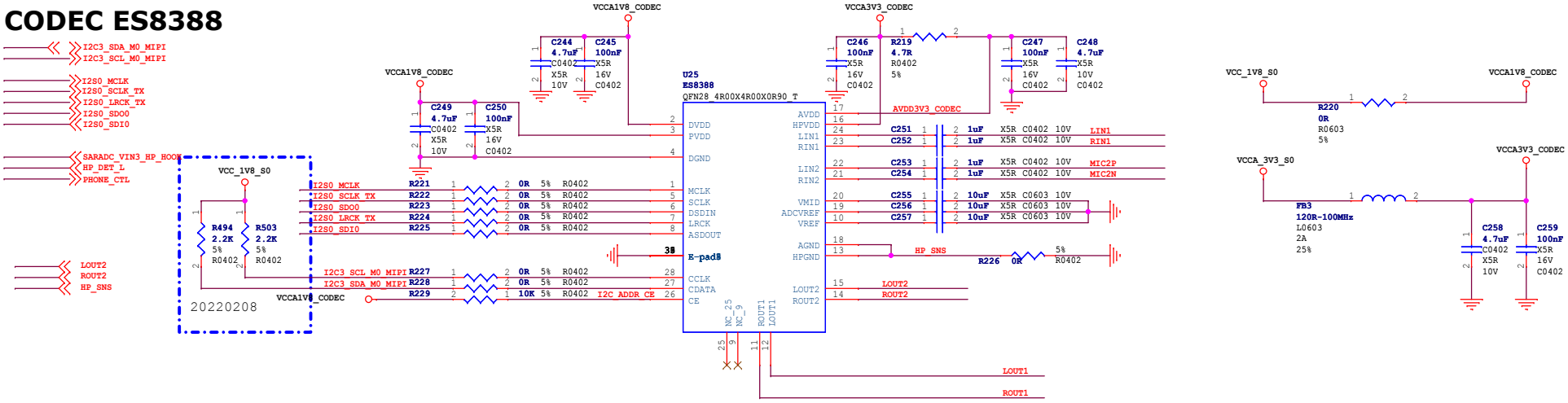

MIC

Headphone

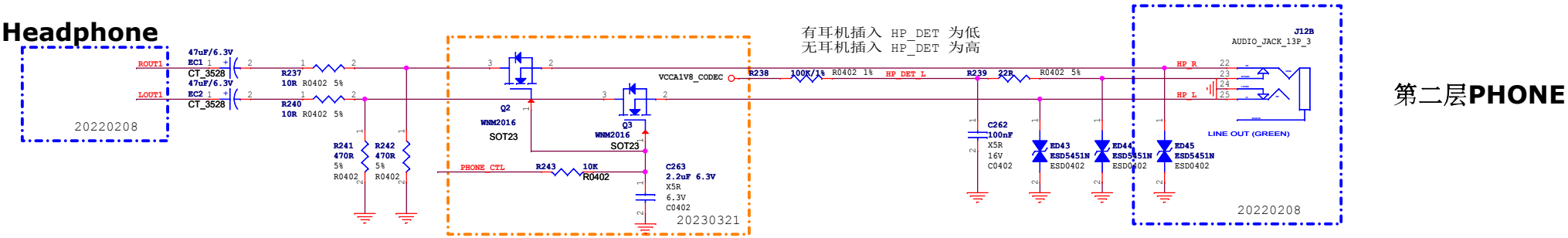

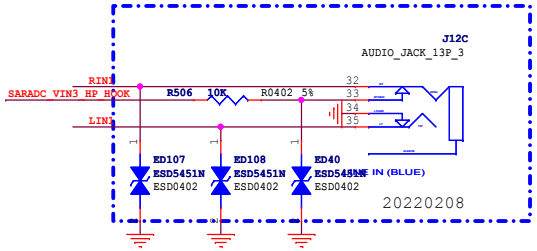

www.t-firefly.com

Title: Audio Port	
File: MB-JM3-RK3588ITX	REV: V1.0
Create Date: Monday, May 10, 2021	Page Num: 13
Modify Date: Friday, November 01, 2024	Page Total: 31

SPEAKER

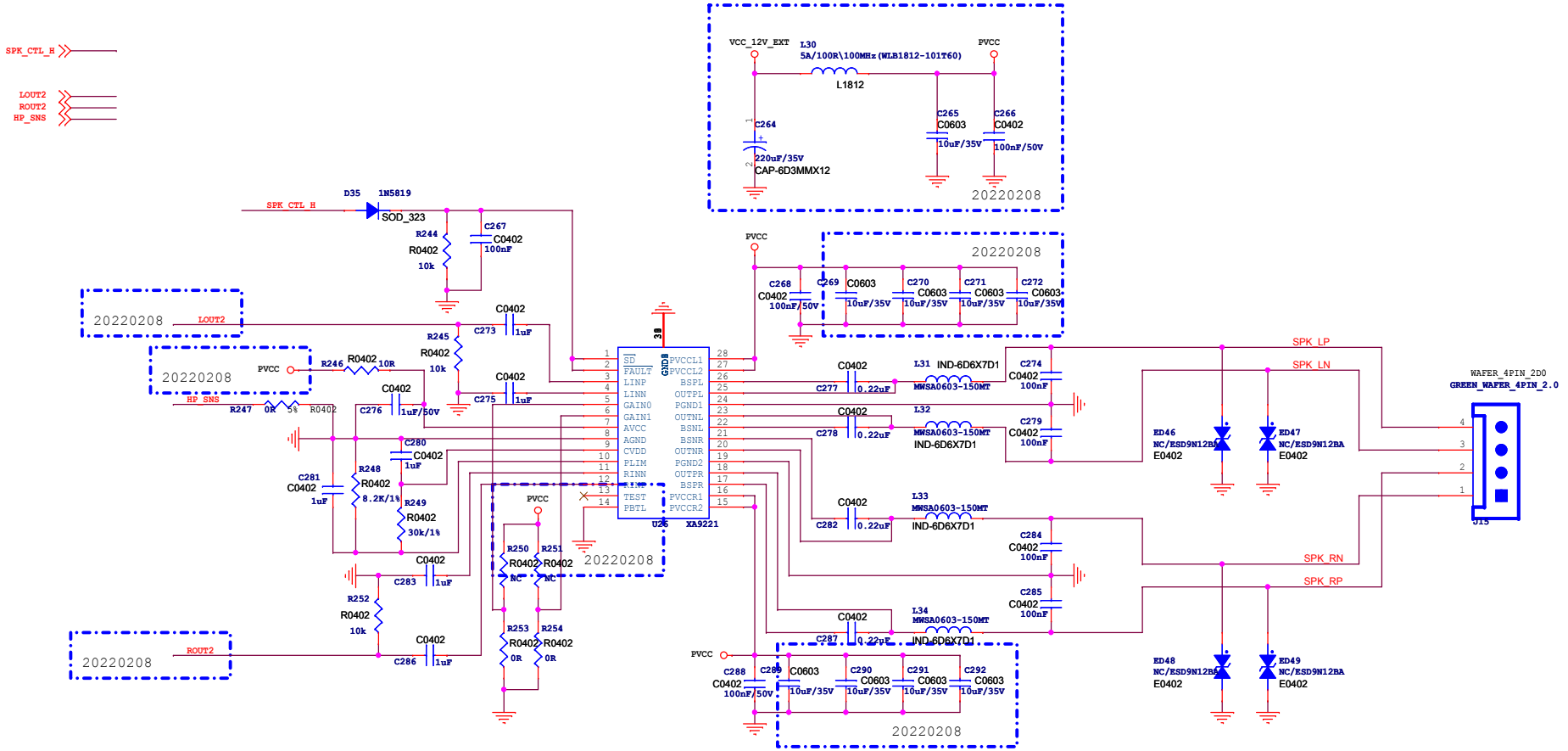

www.t-firefly.com

Title:	SPEAKER	
File:	MB-JM3-RK3588ITX	REV: V1.0
Create Date:	Monday, May 10, 2021	Page Num: 14
Modify Date:	Friday, November 01, 2024	Page Total: 31

PCIe WIFI6/BT Module-2T2R

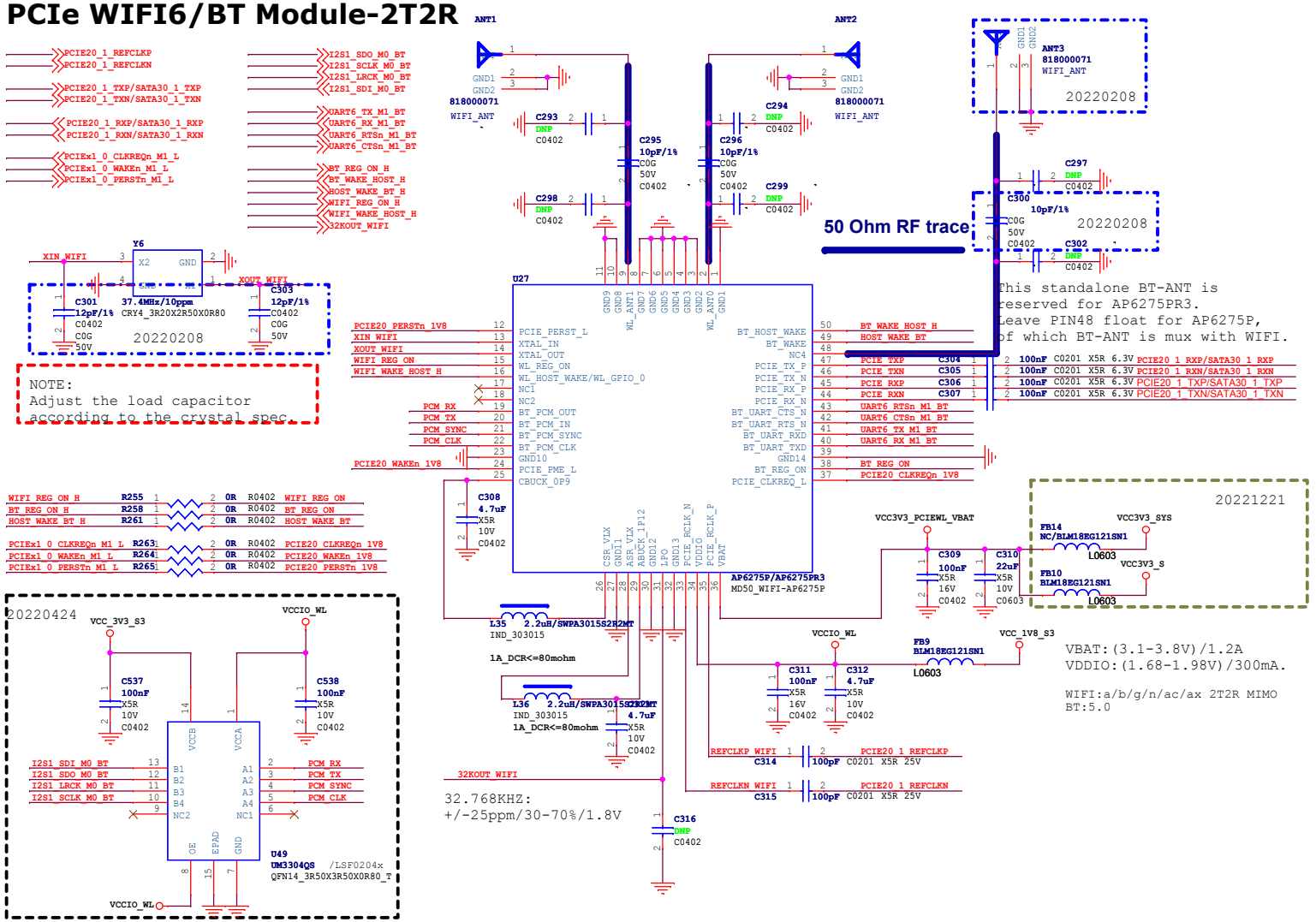

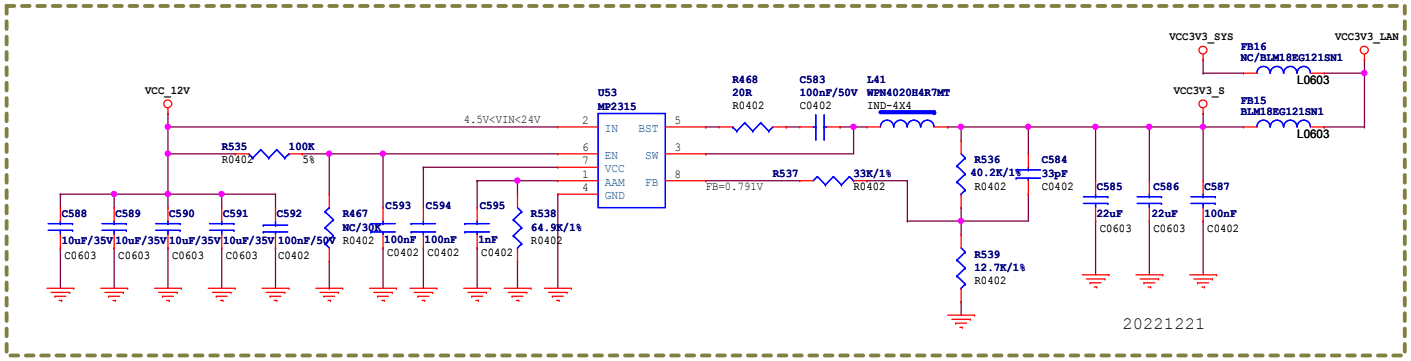

Firefly www.t-firefly.com

Title: WIFI/BT-PCIe 2T2R	
File: MB-JM3-RK3588ITX	REV: V1.0
Create Date: Thursday, January 06, 2022	Page Num: 15
Modify Date: Friday, November 01, 2024	Page Total: 31

MIPI DSI0

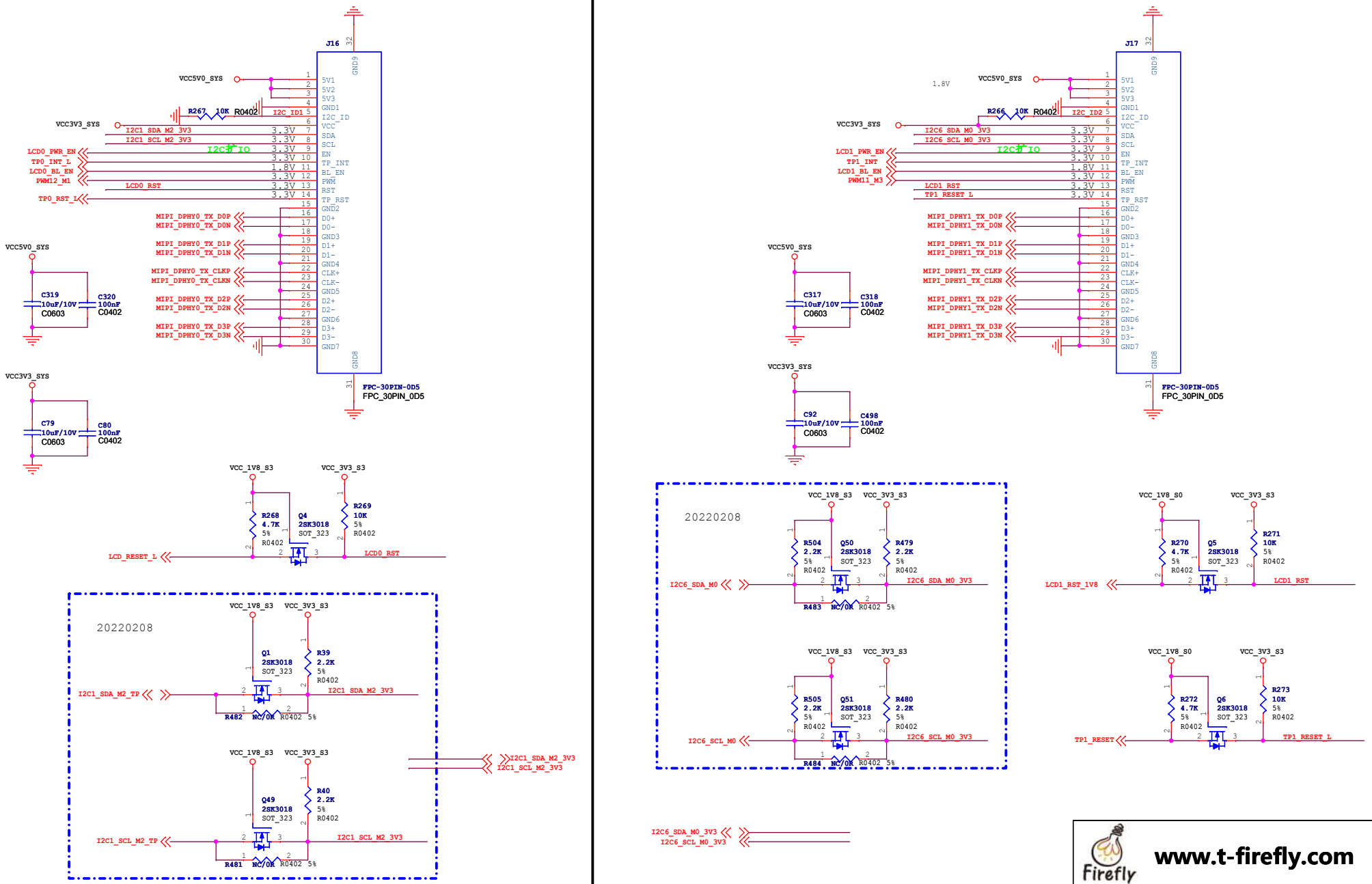

www.t-firefly.com

Title: MIPI DSI	
File: MB-JM3-RK3588ITX	REV: V1.0
Create Date: Tuesday, May 11, 2021	Page Num: 16
Modify Date: Friday, November 01, 2024	Page Total: 31

MIPI CAMERA

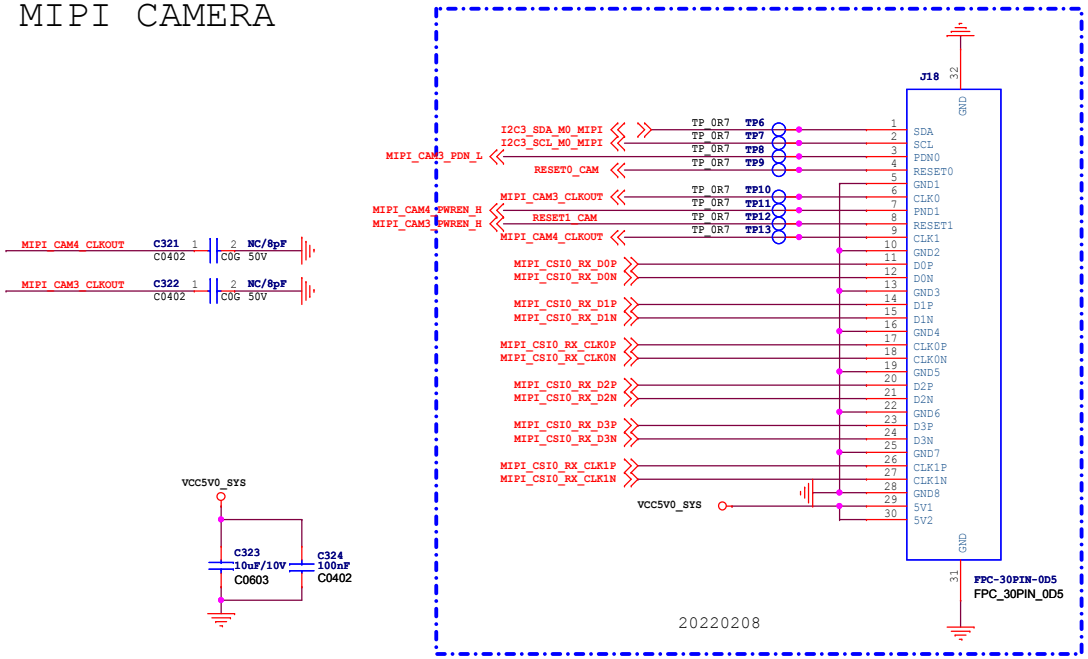

www.t-firefly.com

Title: MIPI CAMREA	
File: MB-JM3-RK3588ITX	REV: V1.0
Create Date: Tuesday, May 11, 2021	Page Num: 17
Modify Date: Friday, November 01, 2024	Page Total: 31

HDMI2.0 RX

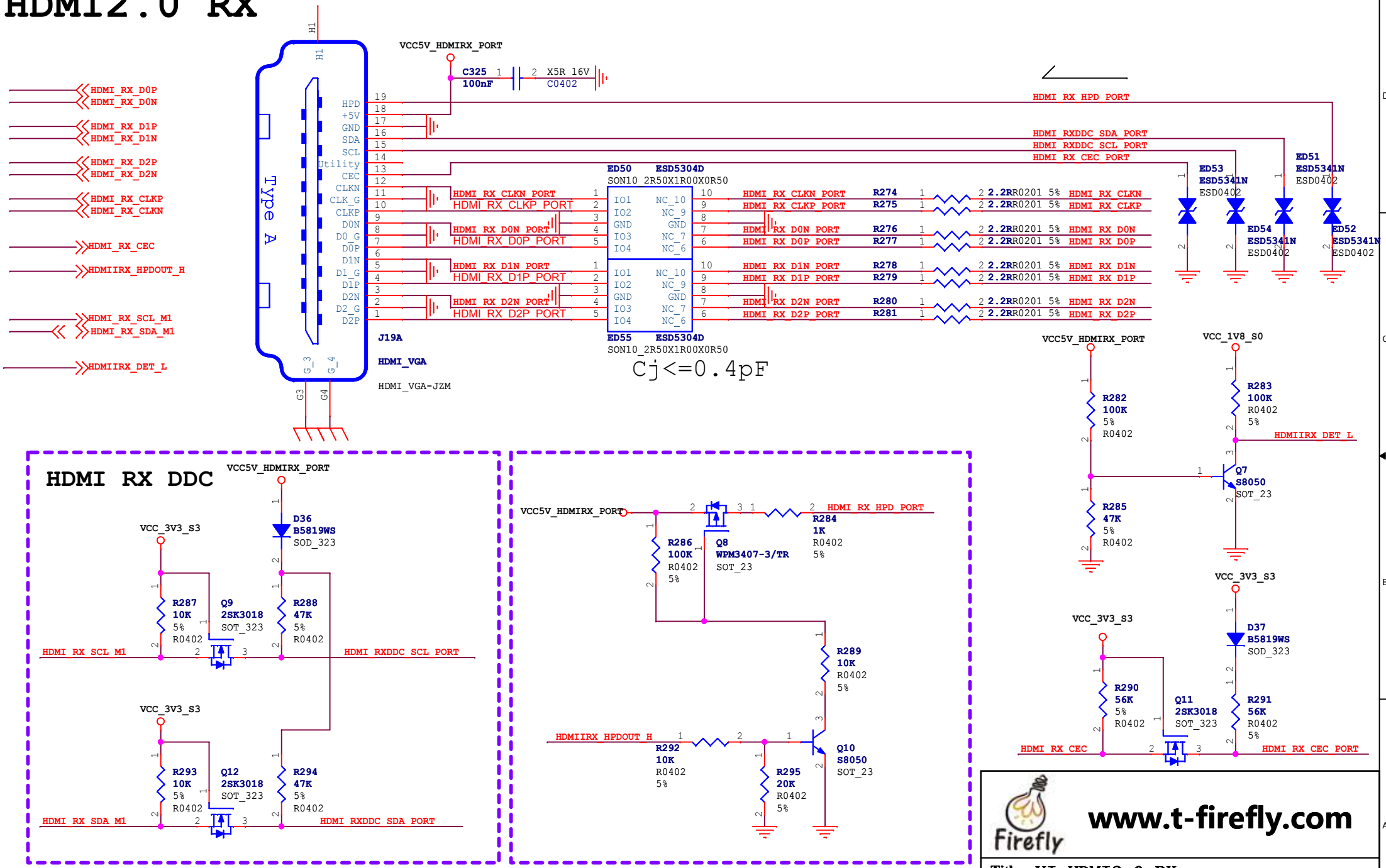

HPD:
Sink Side: Require output, Min 2.4V; Max 5.3V
Source Side:Require input and Detection.
Min 2.0V,Max:5.3V

www.t-firefly.com

Title: VI-HDMI2.0 RX	
File: MB-JM3-RK3588ITX	REV:V1.0
Create Date: Thursday, December 30, 2021	Page Num:18
Modify Date: Friday, November 01, 2024	Page Total: 31

HDMI TX0

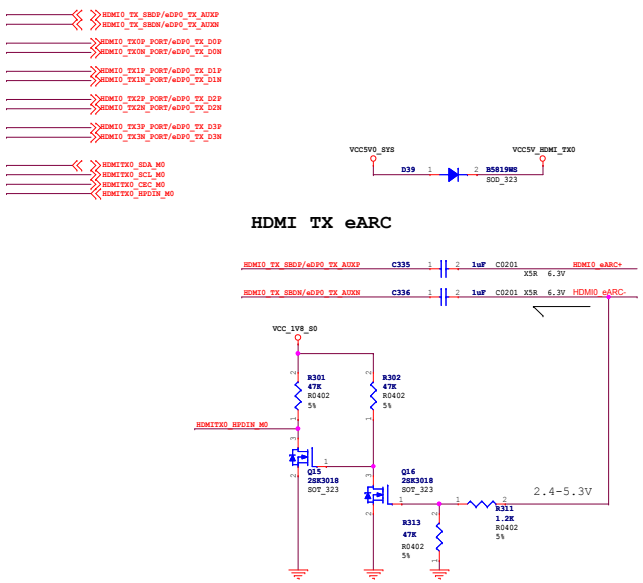

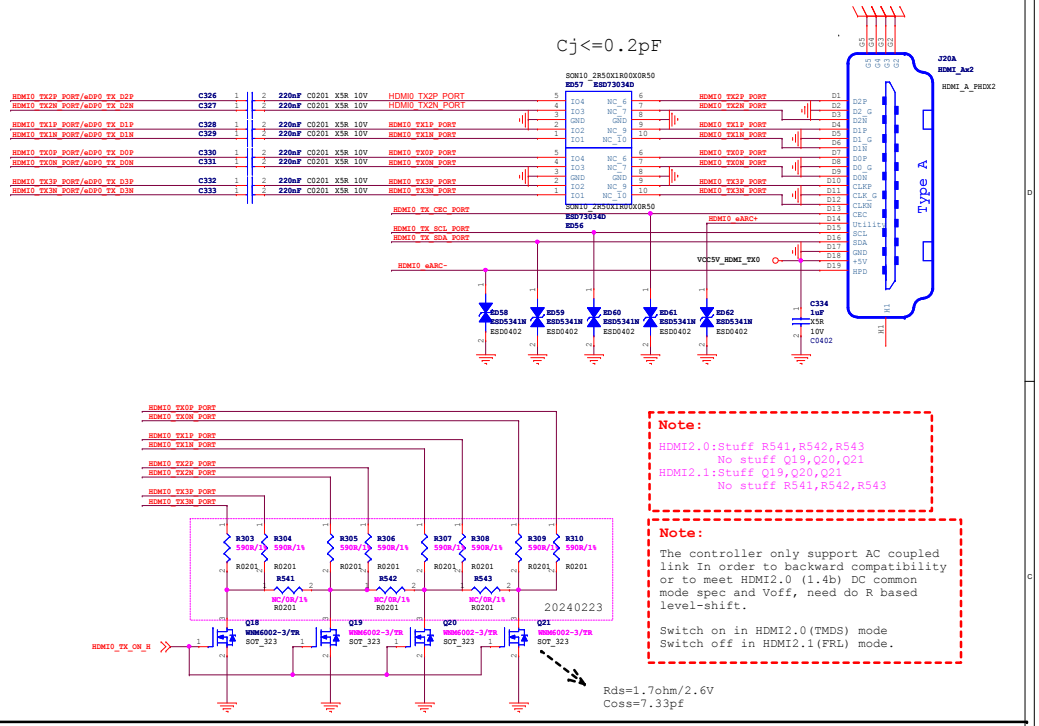

Note:

HDMI2.0:Stuff R541,R542,R543
No stuff Q19,Q20,Q21
HDMI2.1:Stuff Q19,Q20,Q21
No stuff R541,R542,R543

Note:

The controller only support AC coupled link In order to backward compatibility or to meet HDMI2.0 (1.4b) DC common mode spec and Voff, need do R based level-shift.

Switch on in HDMI2.0(TMDS) mode
Switch off in HDMI2.1(FRL) mode.

HDMI TX1

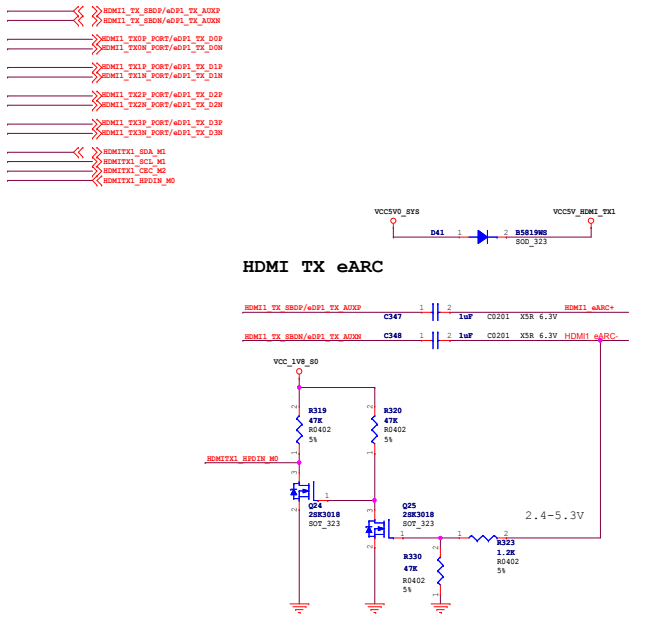

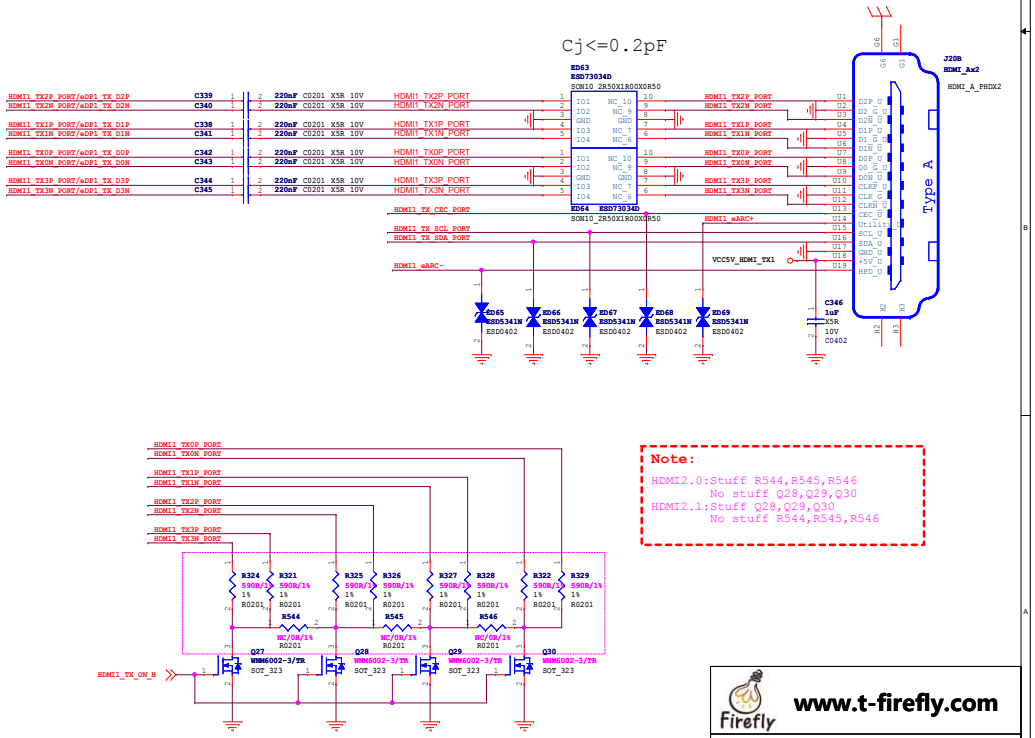

Note:

HDMI2.0:Stuff R544,R545,R546
No stuff Q28,Q29,Q30
HDMI2.1:Stuff Q28,Q29,Q30
No stuff R544,R545,R546

Firefly www.t-firefly.com		
Title: VO-HDMI2.1 TX		
File: MB-JM3-RK3588ITX		REV: V1.0
Create Date: Thursday, December 30, 2021	Page Num: 19	
Modify Date: Friday, November 01, 2024	Page Total: 31	

VGA OUTPUT

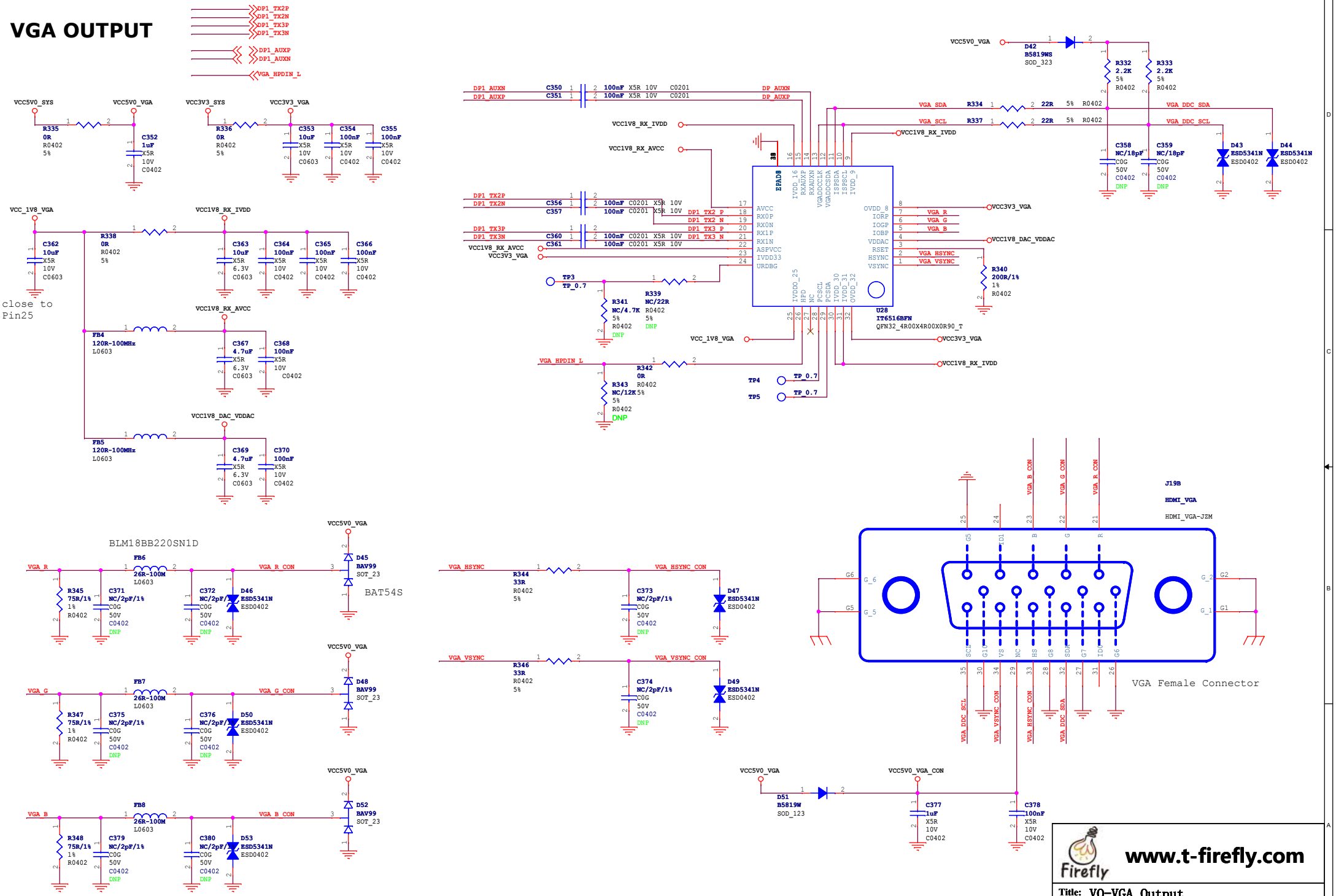

www.t-firefly.com

Title:	VO-VGA Output	
File:	MB-JM3-RK3588ITX	REV: V1.0
Create Date:	Thursday, December 30, 2021	Page Num: 20
Modify Date:	Friday, November 01, 2024	Page Total: 31

Type-C PORT

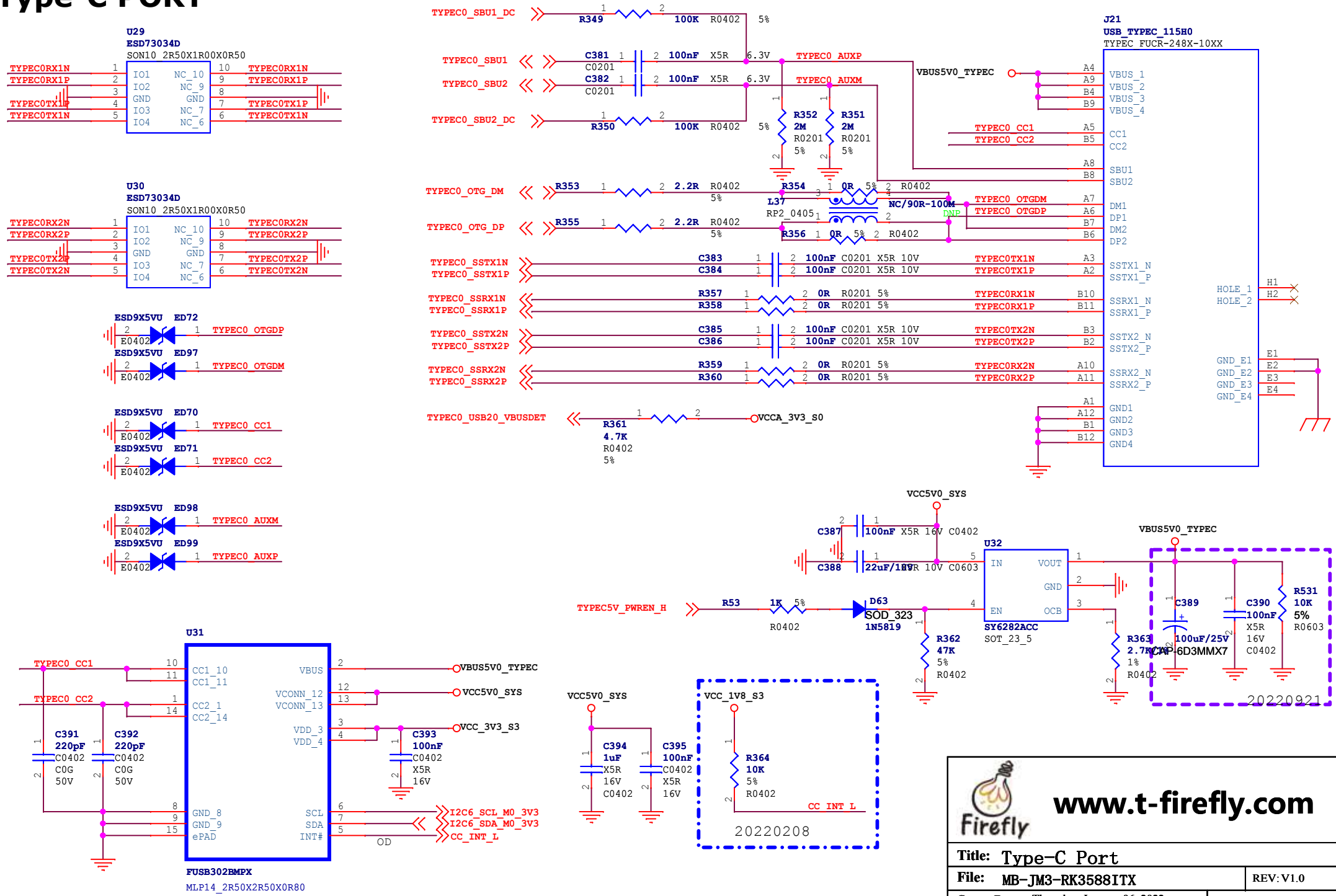

Firefly

www.t-firefly.com

Title:	Type-C Port	
File:	MB-JM3-RK3588ITX	REV:V1.0
Create Date:	Thursday, January 06, 2022	Page Num:21
Modify Date:	Friday, November 01, 2024	Page Total: 31

PCIe3.0 x 4 Slot

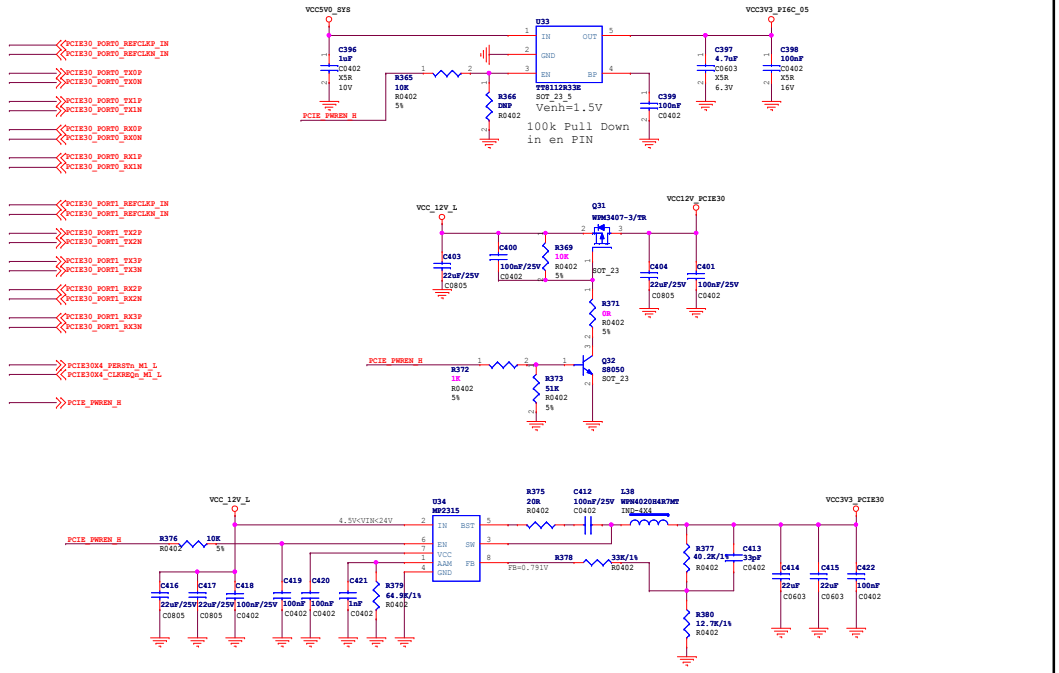

Crystal Generator

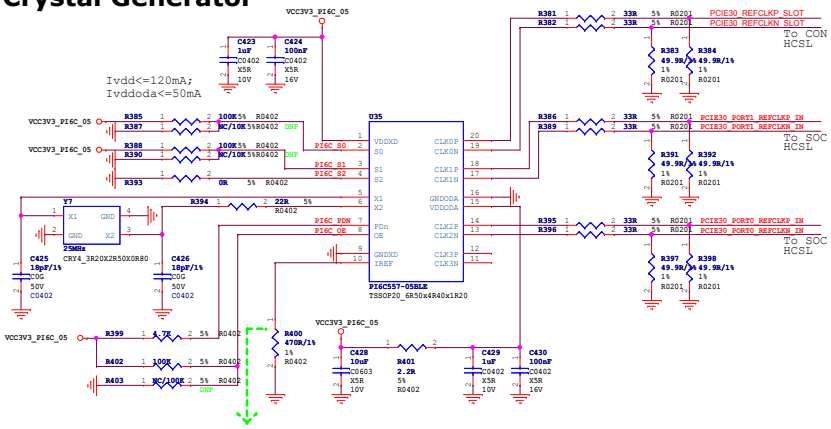

Spread Selection Table:

SS0	SS1	Spread(%)
0	0	Center+/-0.25
1	0	-0.5
0	1	-0.75
1	1	No Spread

If board target trace impedance is
50ohm then R = 475ohm providing
an IREF of 2.32 mA.The output
current (IOH) is 6 * IREF.
Vih=6x2.32X50=696mV

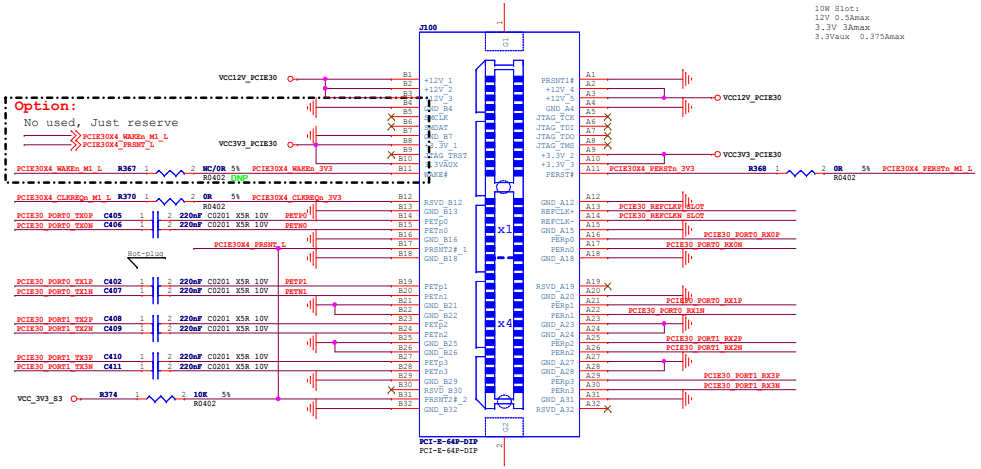

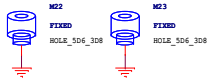

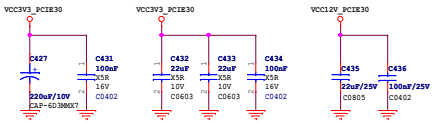

www.t-firefly.com

Title:	PCIE-PCIE3.0 Slot	
File:	MB-JM3-RK3588ITX	REV: V1.0
Create Date:	Thursday, December 30, 2021	Page Num: 22
Modify Date:	Friday, November 01, 2024	Page Total: 31

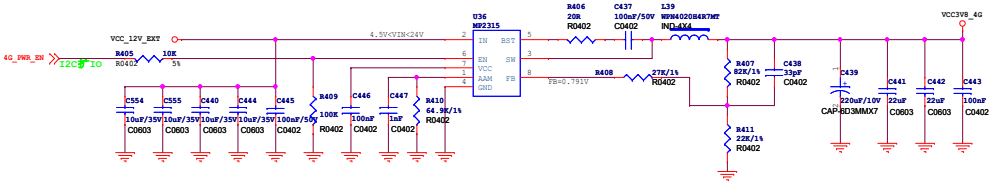

4G/5G SIM CARD

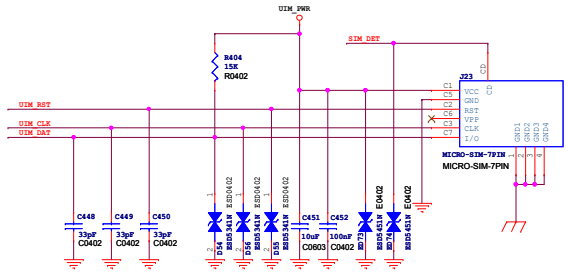

M2_NGFF-4G/5G

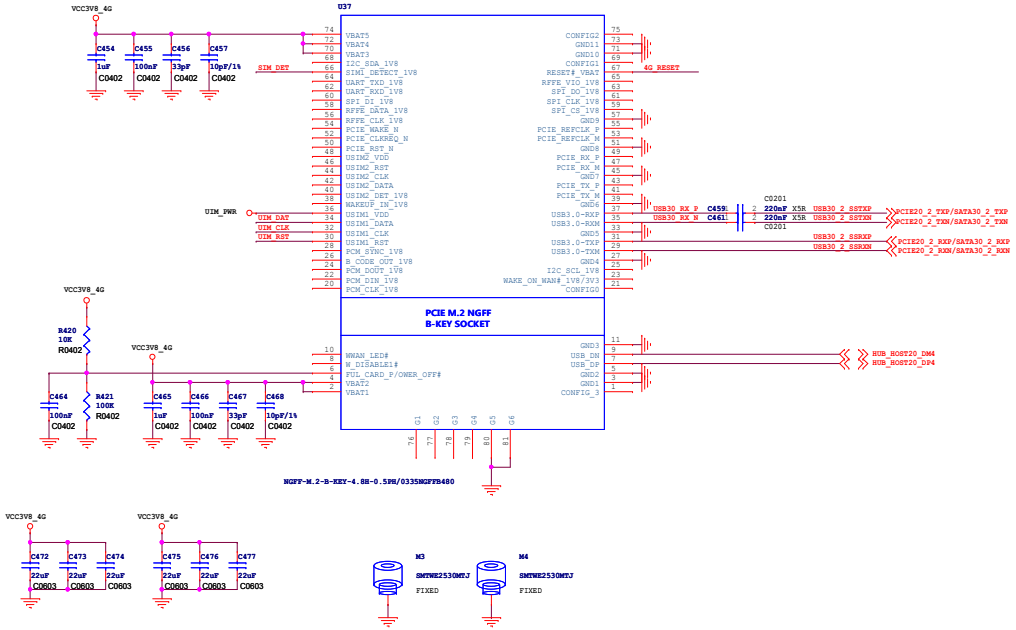

MINI PCIE-4G

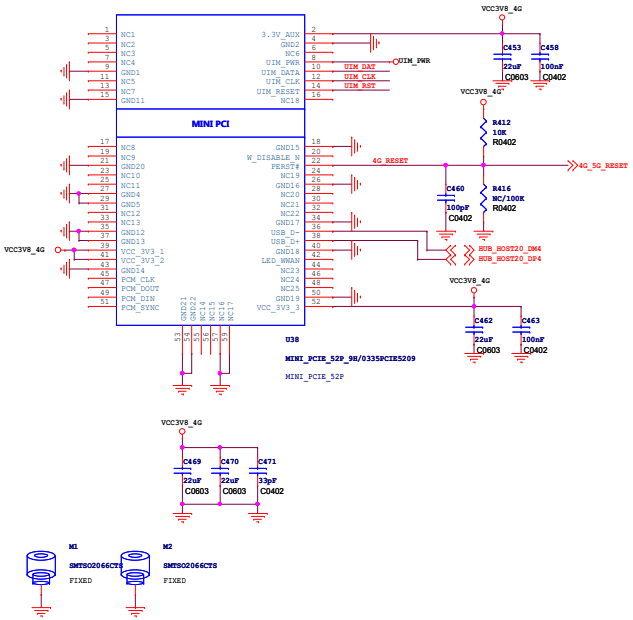

www.t-firefly.com

Title:	4G/5G-MODULE	
File:	MB-JM3-RK3588ITX	REV: V1.0
Create Date:	Tuesday, May 11, 2021	Page Num: 23
Modify Date:	Friday, November 01, 2024	Page Total: 31

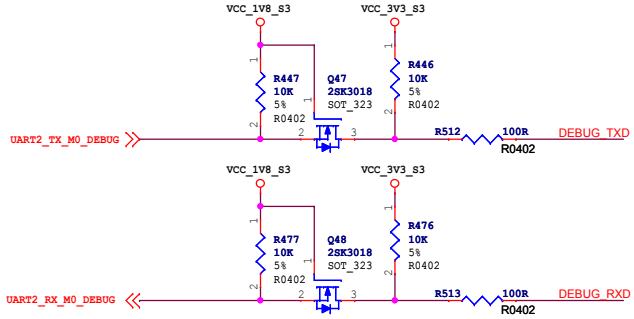

20220208

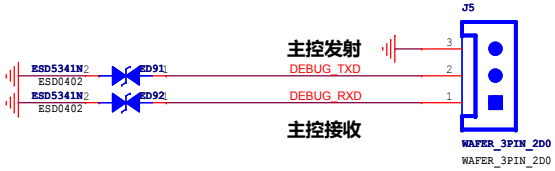

LED

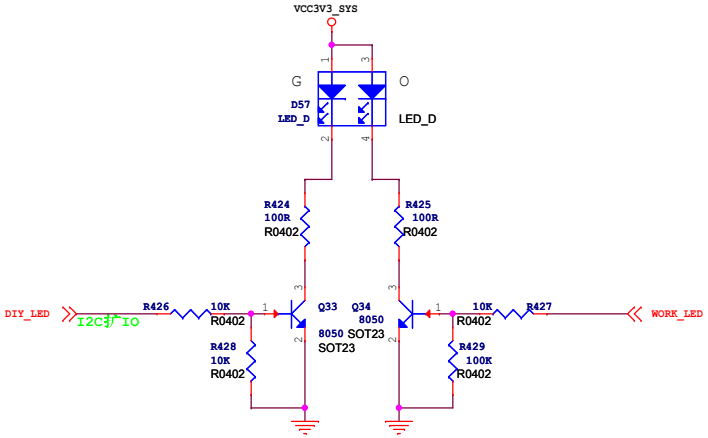

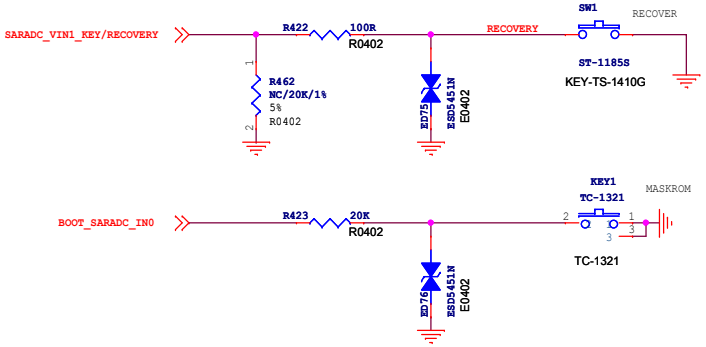

RECOVERY_KEY

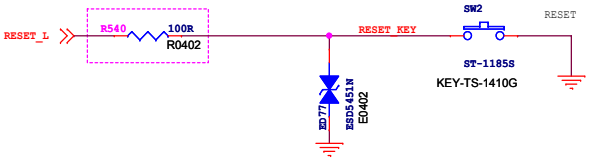

RESET_KEY

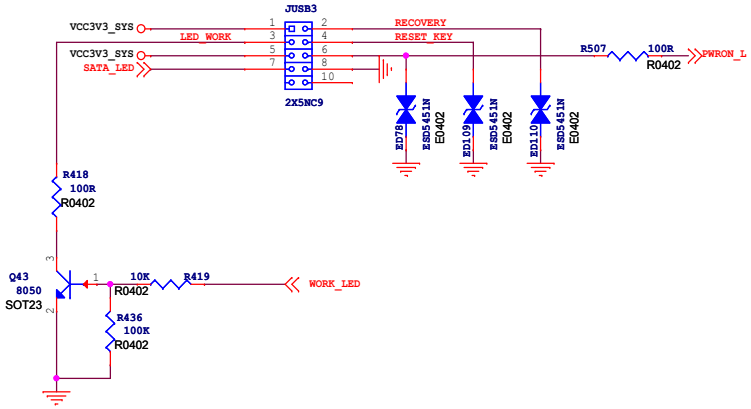

www.t-firefly.com

Title:	KEY/LED/DEBUG	
File:	MB-JM3-RK3588ITX	REV: V1.0
Create Date:	Monday, May 10, 2021	Page Num: 24
Modify Date:	Friday, November 01, 2024	Page Total: 31

RTC IC

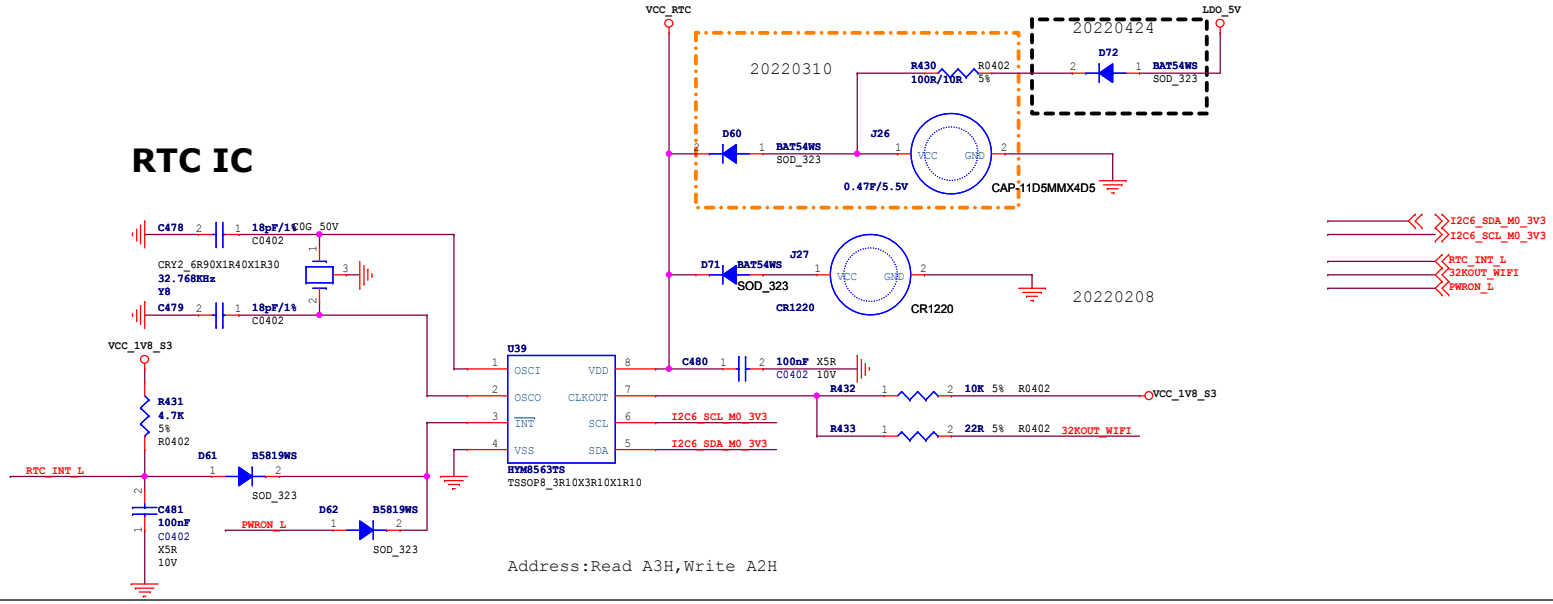

Address:Read A3H,Write A2H

FAN

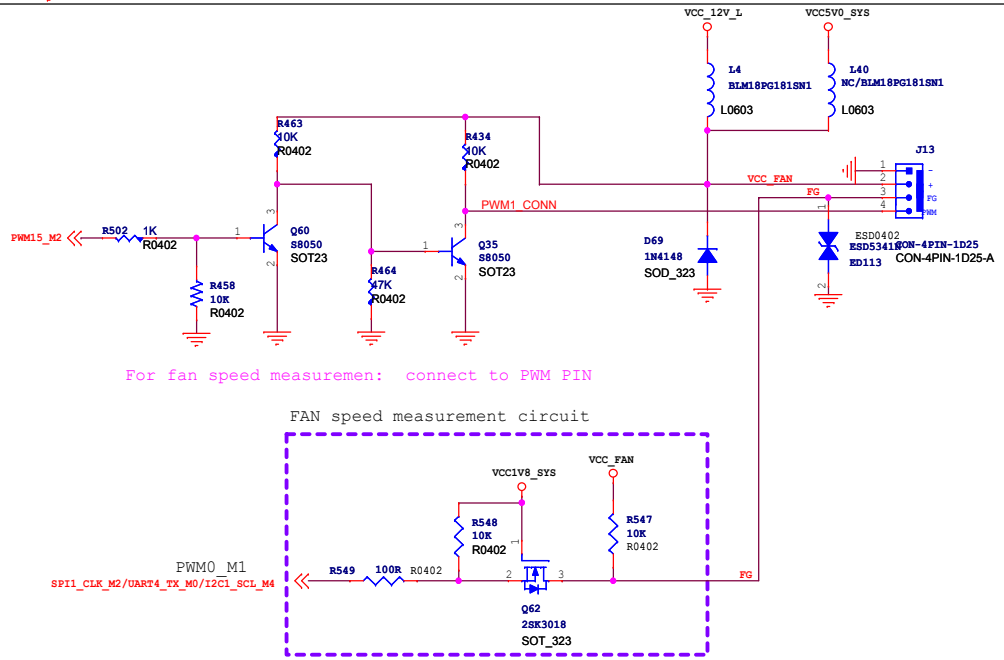

www.t-firefly.com

Title:	FAN/RTC	
File:	MB-JM3-RK3588ITX	REV: V1.0
Create Date:	Monday, May 10, 2021	Page Num: 25
Modify Date:	Friday, November 01, 2024	Page Total: 31

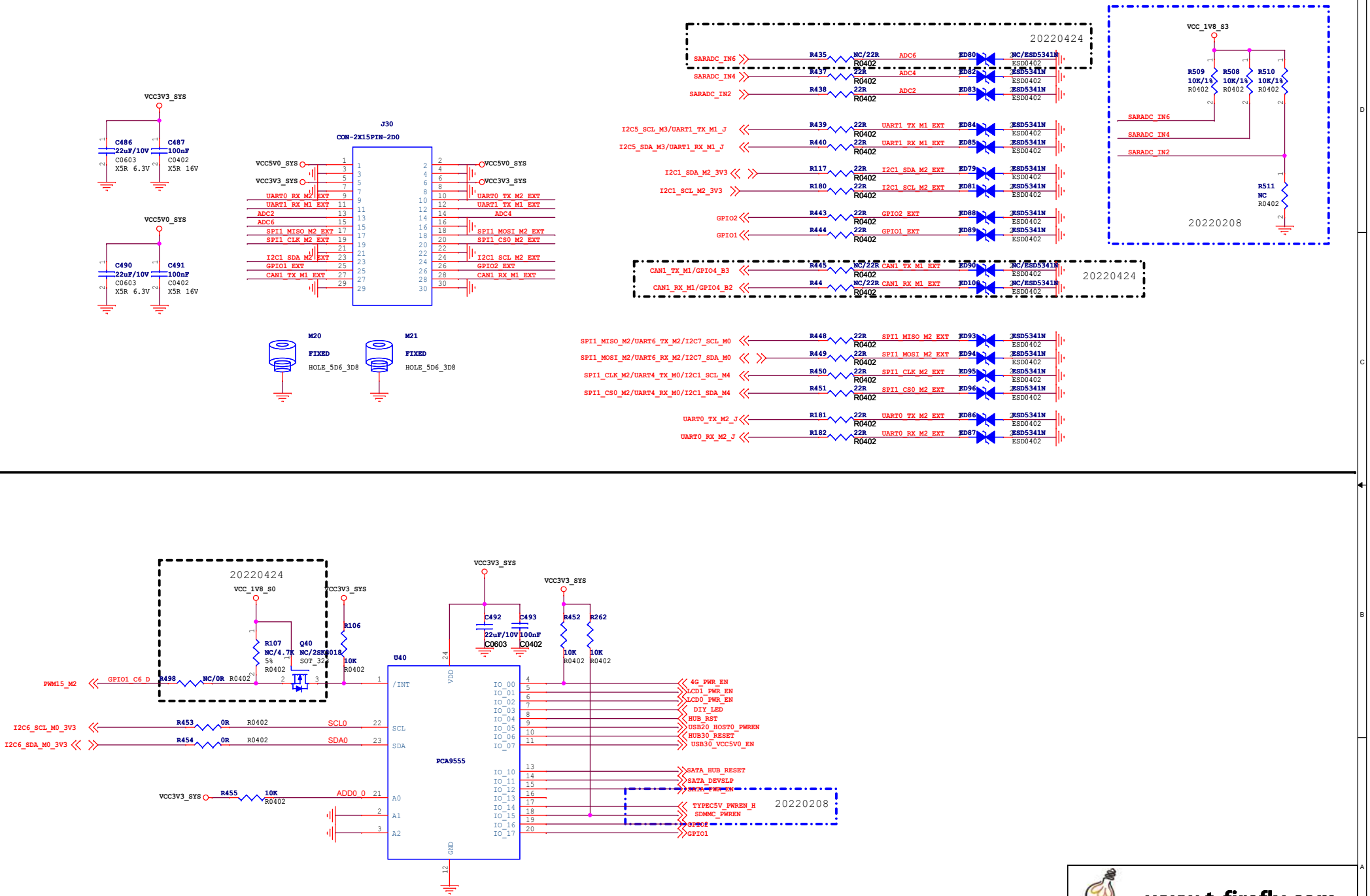

www.t-firefly.com

Title:	Extension Interface
File:	MB-JM3-RK3588ITX
REV: V1.0	
Create Date:	Thursday, December 02, 2021
Page Num: 26	
Modify Date:	Friday, November 01, 2024
Page Total: 31	

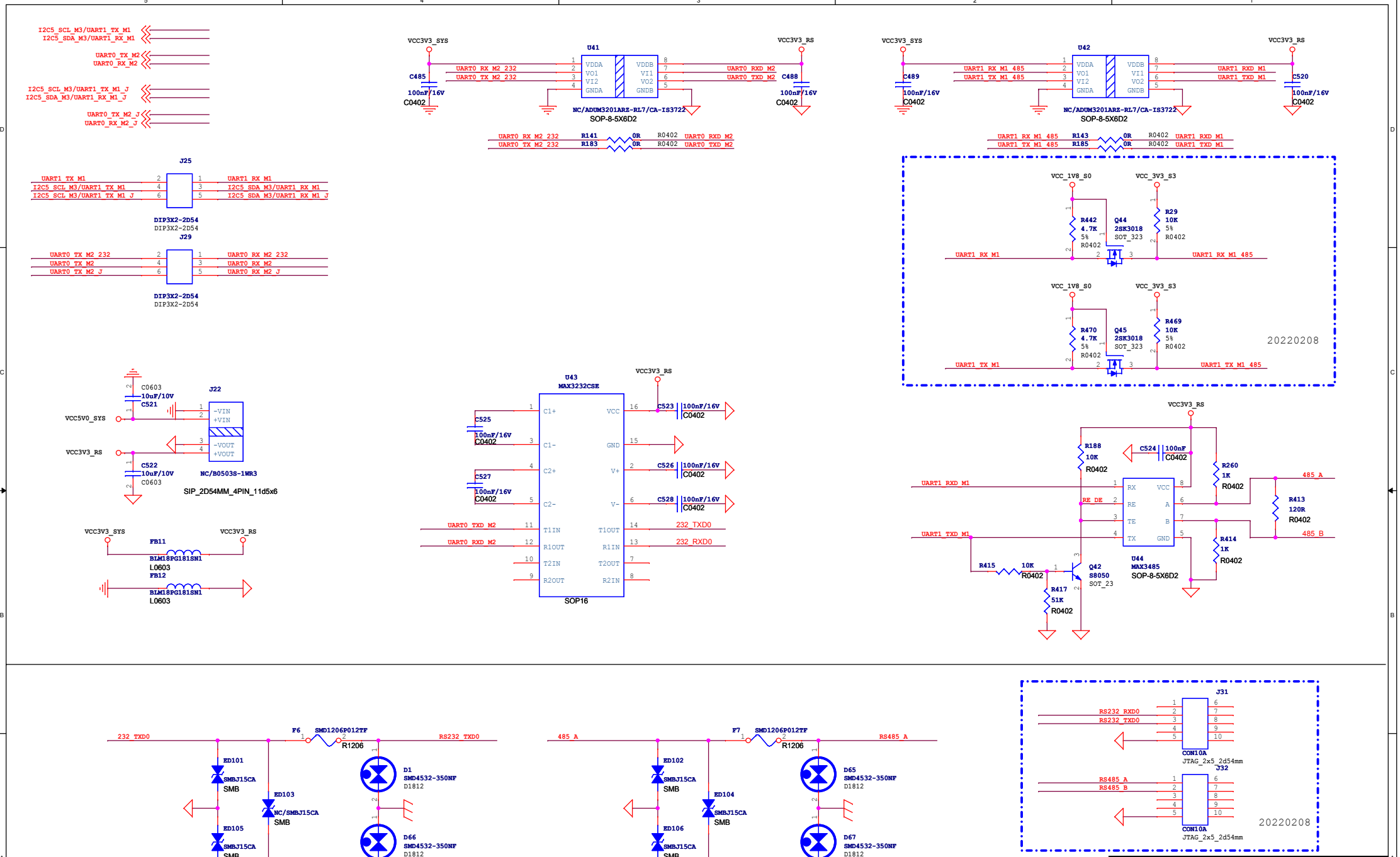

www.t-firefly.com

Title:	RS232/RS485	
File:	MB-JM3-RK3588ITX	REV: V1.0
Create Date:	Monday, January 17, 2022	Page Num: 28
Modify Date:	Friday, November 01, 2024	Page Total: 31

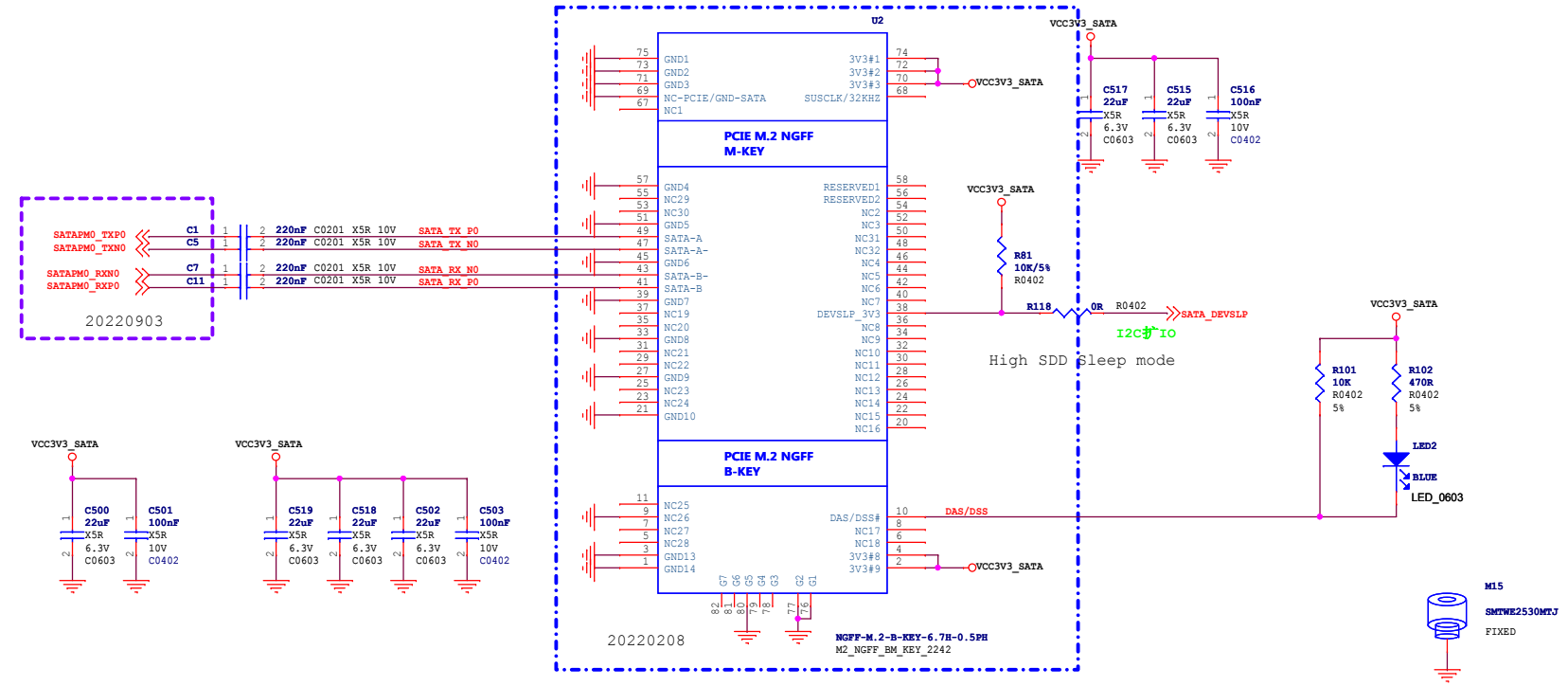

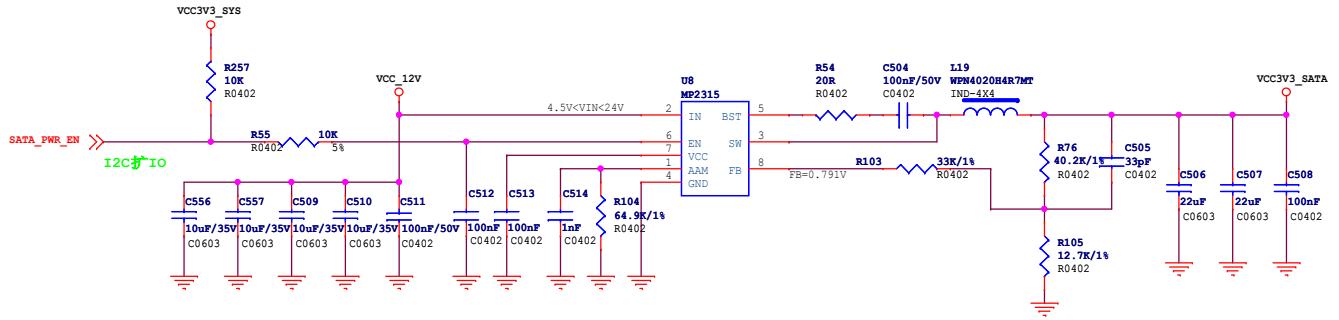

Firefly www.t-firefly.com

Title:	M. 2 SATA	
File:	MB-JM3-RK3588ITX	REV: V1.0
Create Date:	Monday, January 10, 2022	Page Num: 29
Modify Date:	Friday, November 01, 2024	Page Total: 31

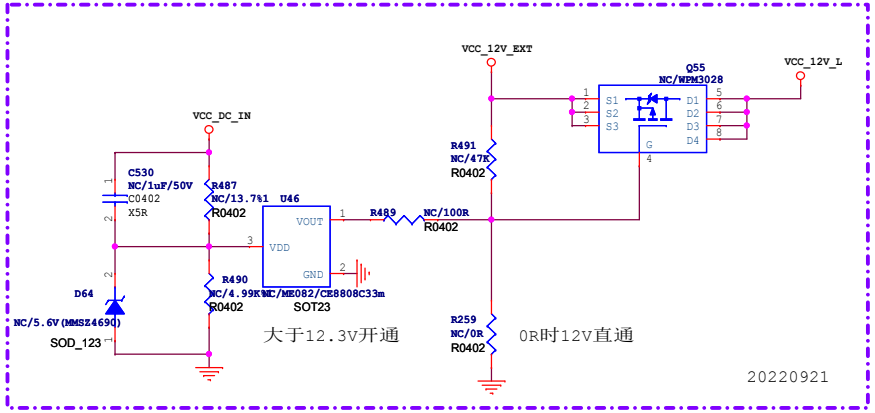

CAN transceiver IC

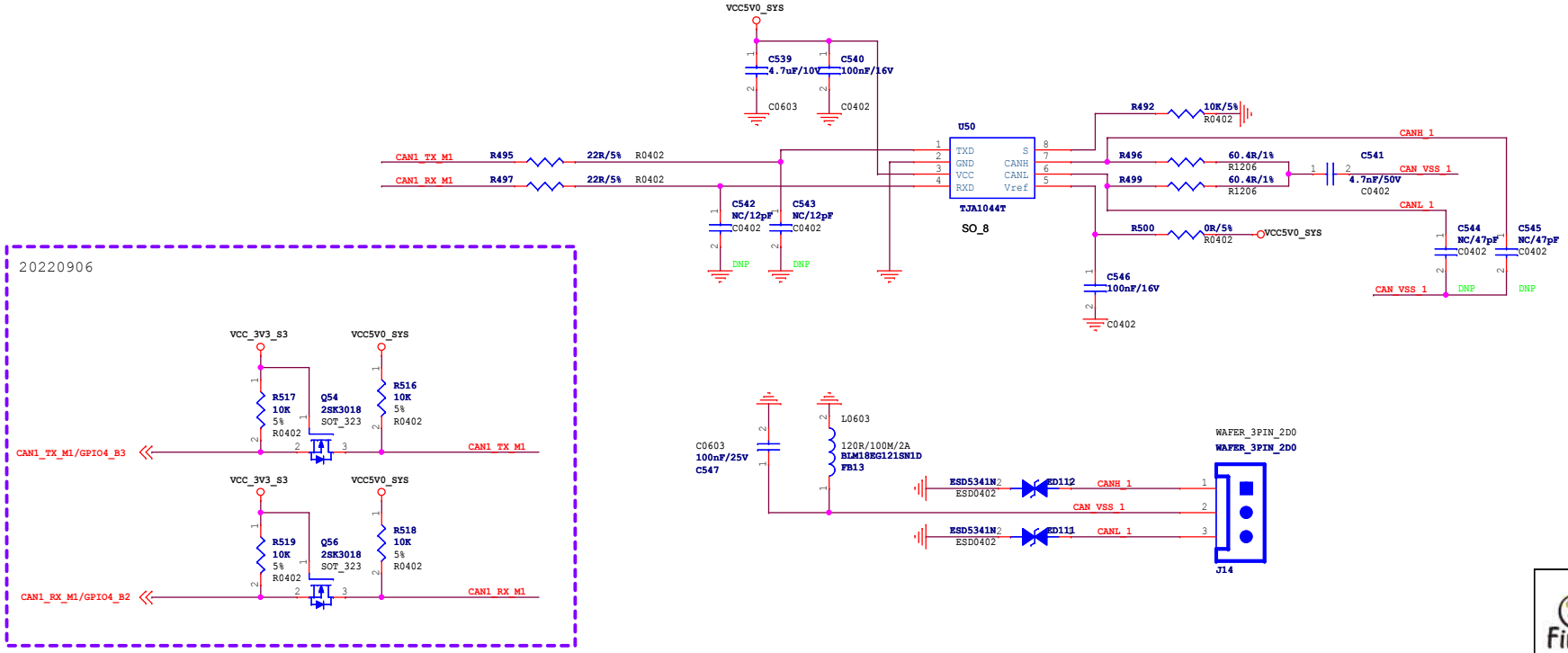

Title:	12V Power Switch	
File:	MB-JM3-RK3588ITX	REV: V1.0
Create Date:	Saturday, February 12, 2022	Page Num: 30
Modify Date:	Friday, November 01, 2024	Page Total: 31

www.t-firefly.com

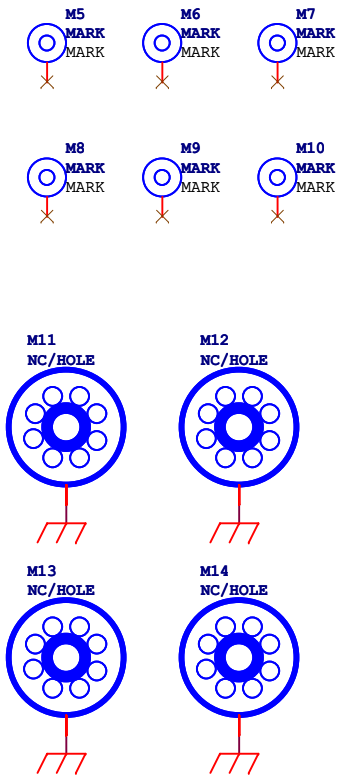

www.t-firefly.com

Title:	Mark/hole/shell	
File:	MB-JM3-RK3588ITX	REV:V1.0
Create Date:	Monday, May 18, 2020	Page Num:31
Modify Date:	Friday, November 01, 2024	Page Total: 31

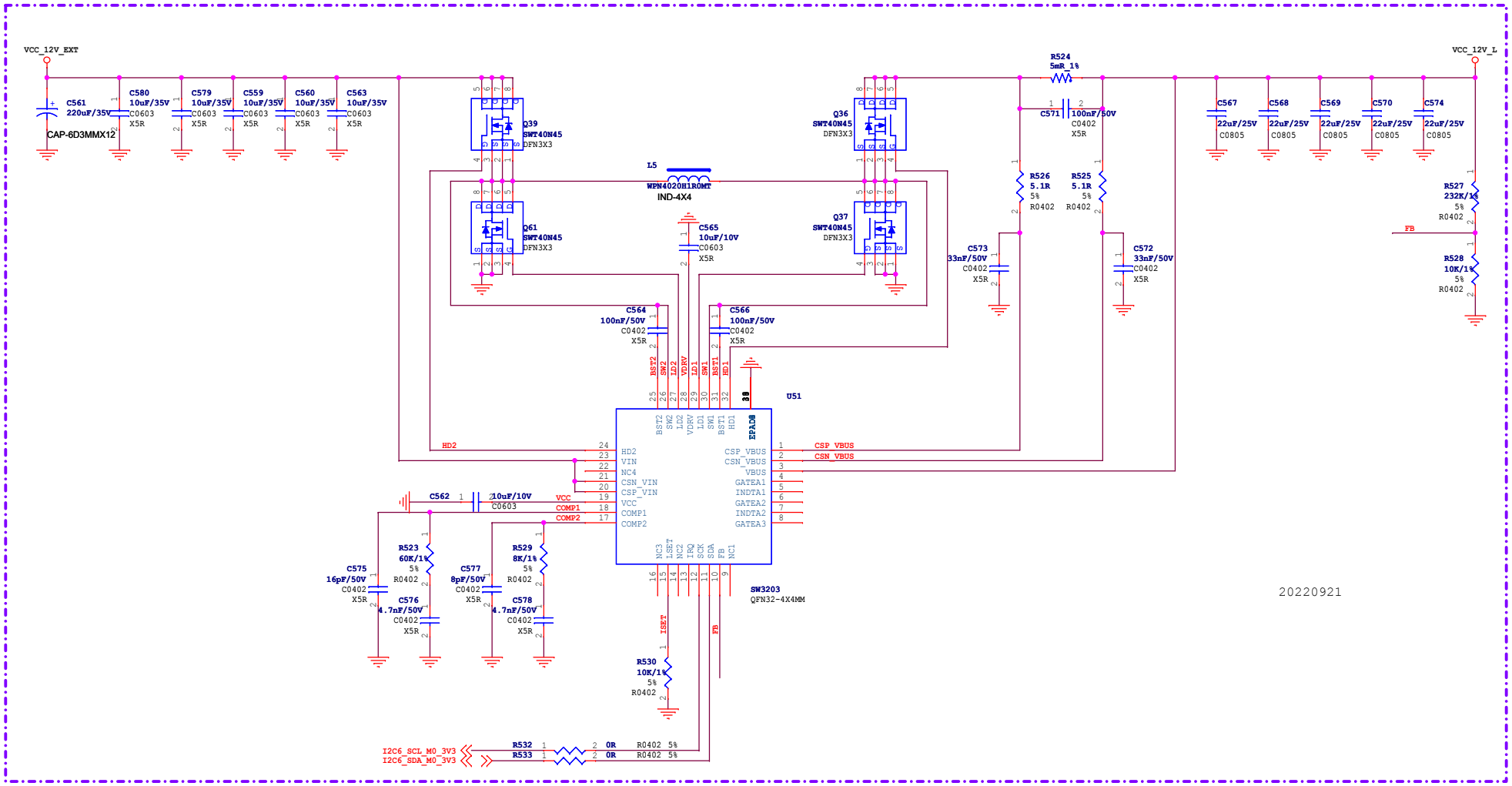

www.t-firefly.com

Title:	Mark/hole/shell	
File:	MB-JM3-RK3588ITX	REV: V1.0
Create Date:	Saturday, September 03, 2022	Page Num: 31
Modify Date:	Friday, November 01, 2024	Page Total: 31