RK3588S EVB Block Diagram

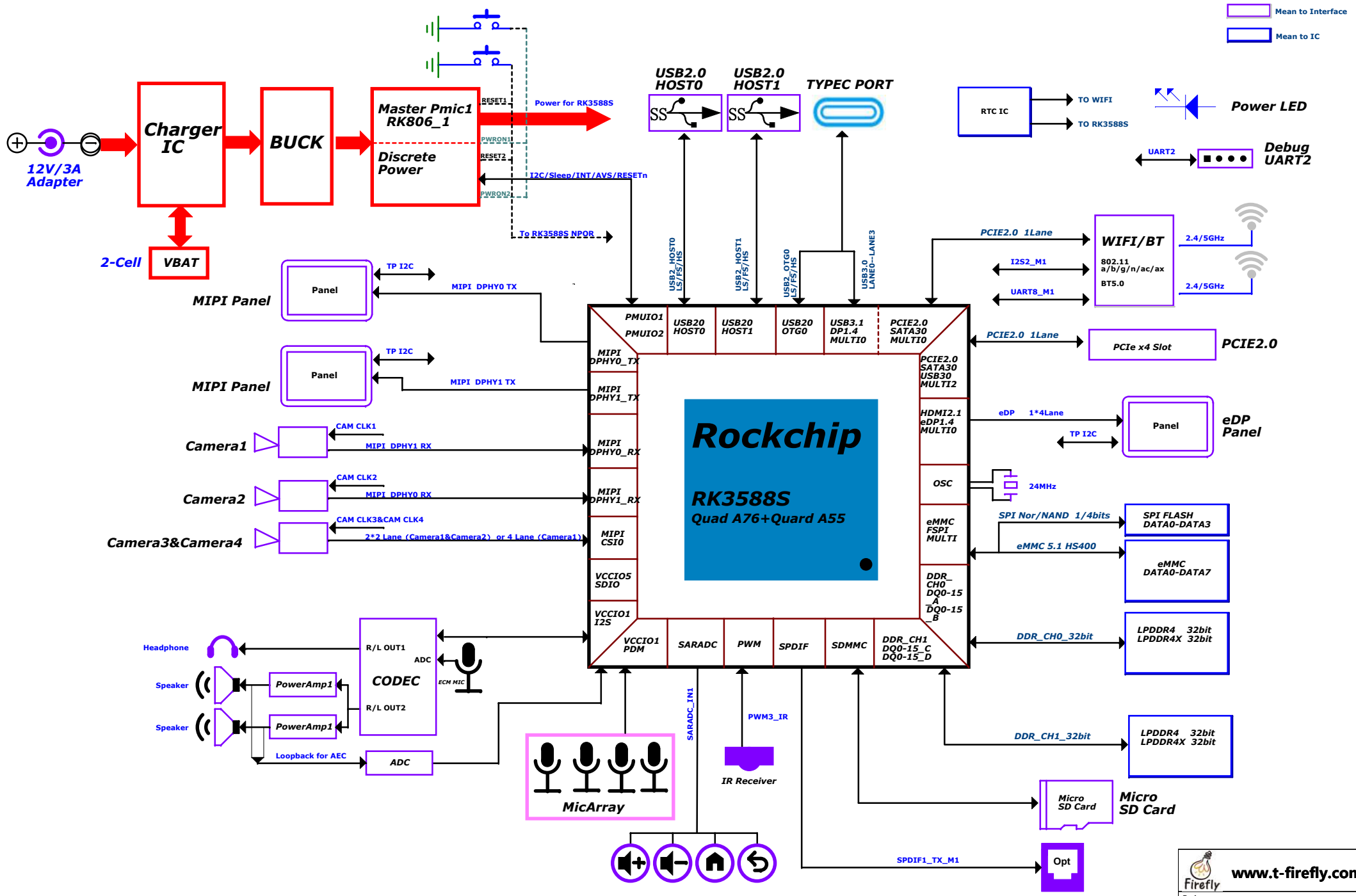

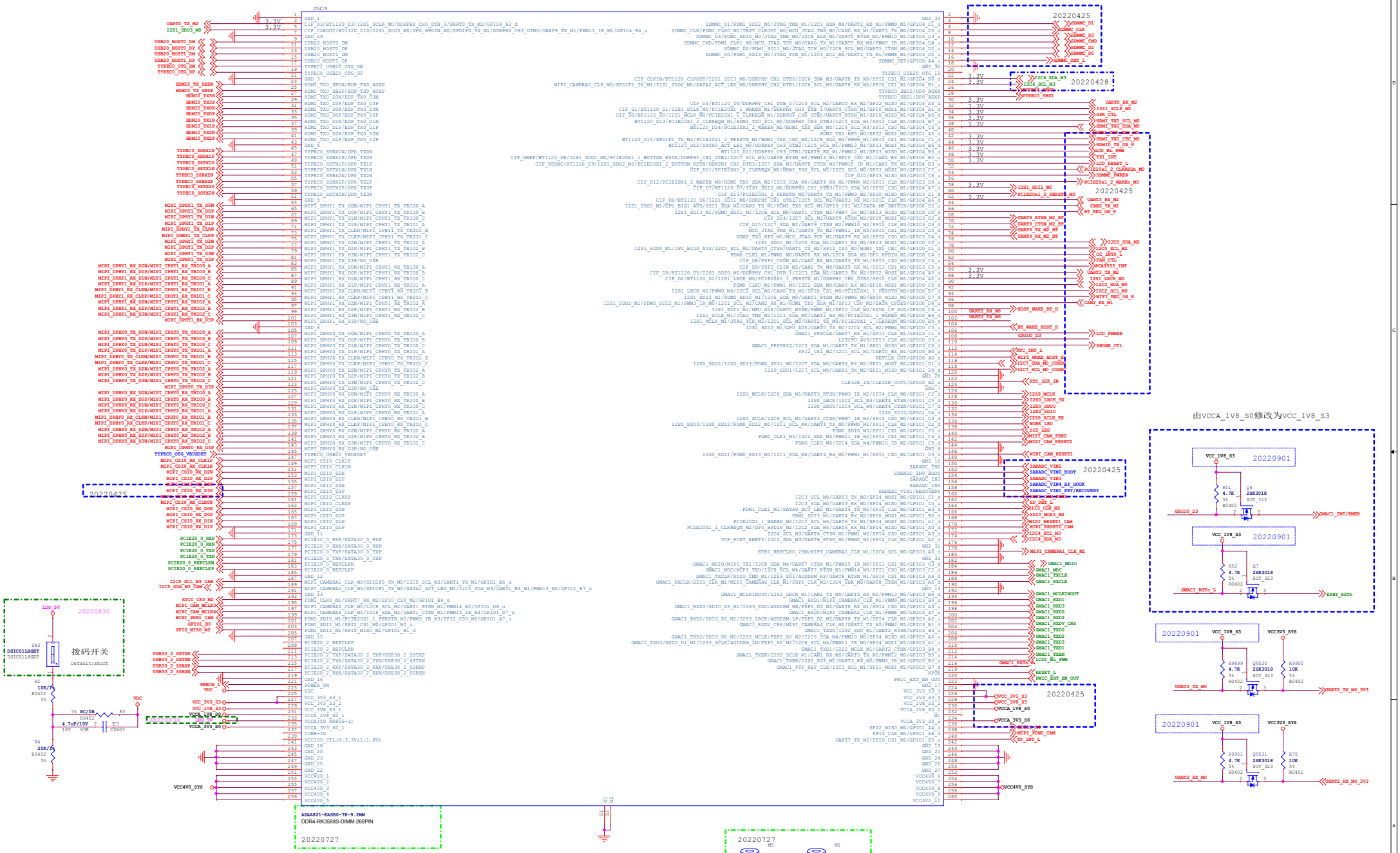
J5419
20220425
20220428
20220425
20220425
20220425
20220425
20220830
拨码开关
Default:short
由VCCA_1V8_S0修改为VCC_1V8_S3
20220901
20220727
ASAA821-EASB0-7R-9.2MM
DDR4-RK3588S-DIMM-260PIN
20220727
SMTS03070CTJ
SMTS03070CTJ
PAD_1D0
PAD_1D0
www.t-firefly.com
Project: Schematic Name
File: MB-RK3588S-JD4
REV: V1.0
Create Date: Wednesday, February 16, 2022
Page Num: 2
Modify Date: Monday, November 21, 2022
Page Total: 31

DC_IN

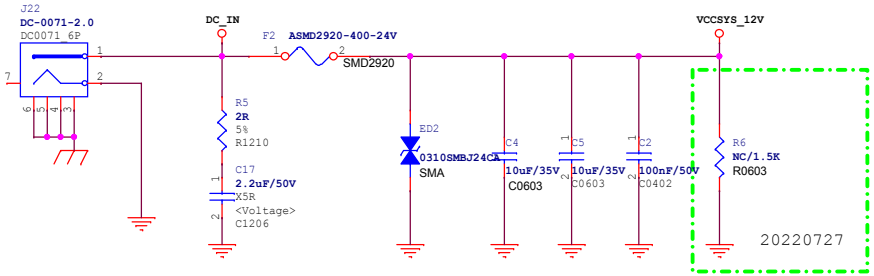

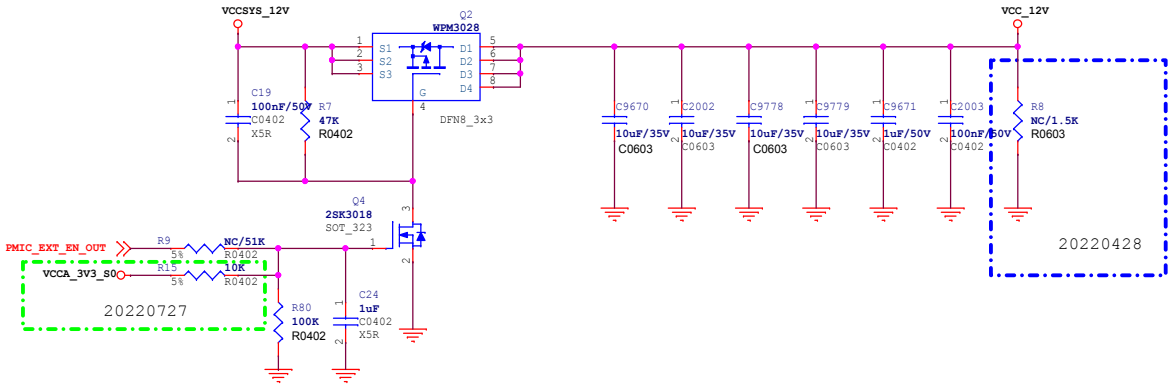

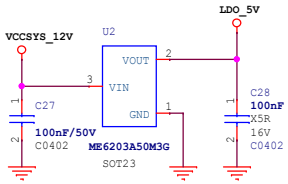

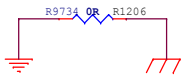

www.t-firefly.com

Project: Schematic Name	
File: MB-RK3588S-JD4	REV: V1.0
Create Date: Tuesday, March 15, 2022	Page Num: 3
Modify Date: Thursday, September 01, 2022	Page Total: 31

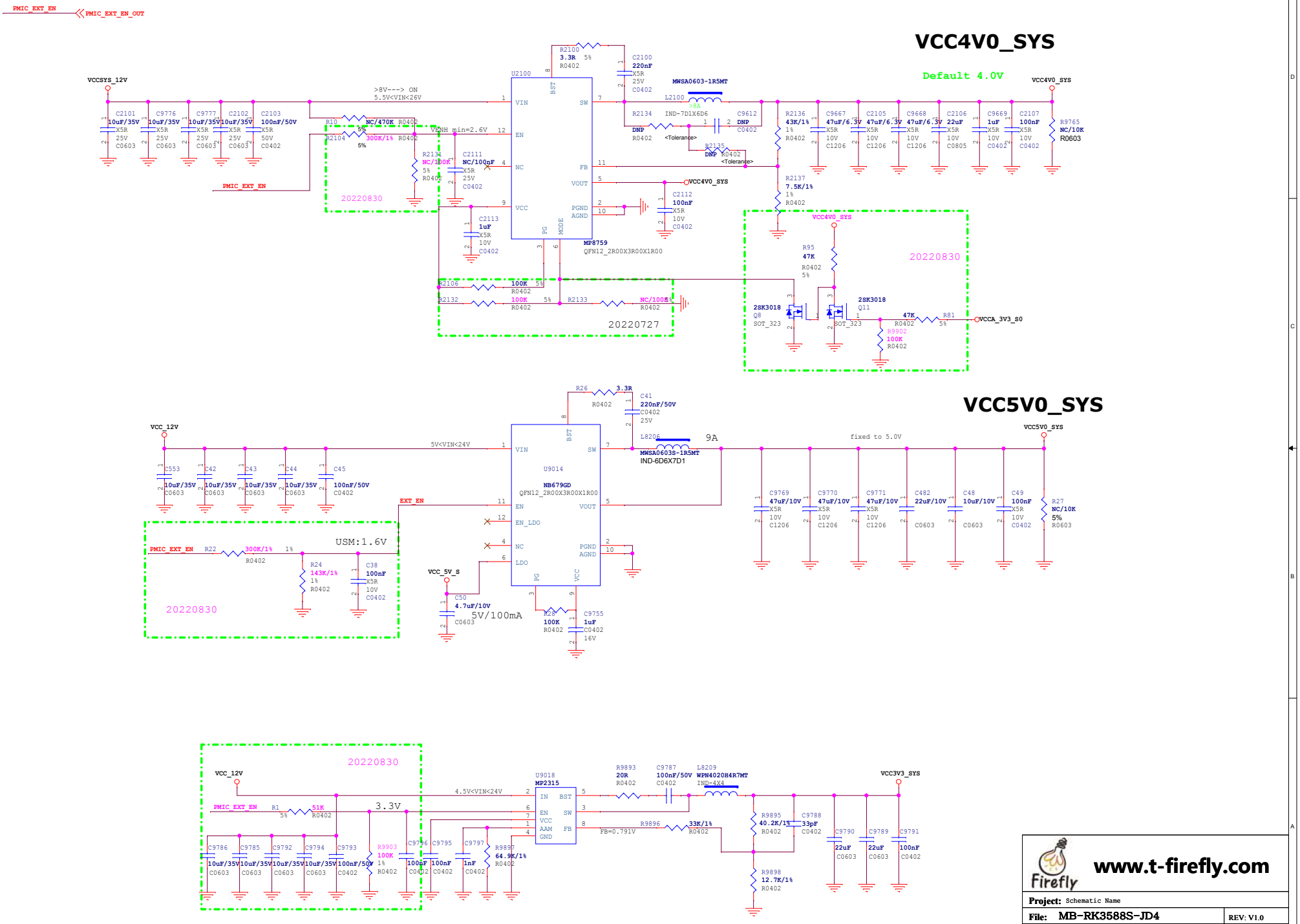
VCC4V0_SYS
Default 4.0V
VCC5V0_SYS
PMIC_EXT_EN
PMIC_EXT_EN_OUT
VCCSYS_12V
VCC4V0_SYS
U2100
MP8759
QFN12_2R00X3R00X1R00
MWSA0603-1R5MT
20220830
20220727
VCCA_3V3_S0
VCC_12V
VCC5V0_SYS
U9014
NB679GD
QFN12_2R00X3R00X1R00
MWSA0603S-1R5MT
IND-6D6X7D1
9A
fixed to 5.0V
5V<VIN<24V
EXT_EN
USM:1.6V
VCC_5V_S
5V/100mA
U9018
MP2315
4.5V<VIN<24V
3.3V
VCC3V3_SYS
FB=0.791V
www.t-firefly.com
Project: Schematic Name
File: MB-RK3588S-JD4
REV: V1.0
Create Date: Tuesday, April 06, 2021
Page Num: 4
Modify Date: Thursday, September 22, 2022
Page Total: 31

RTC IC

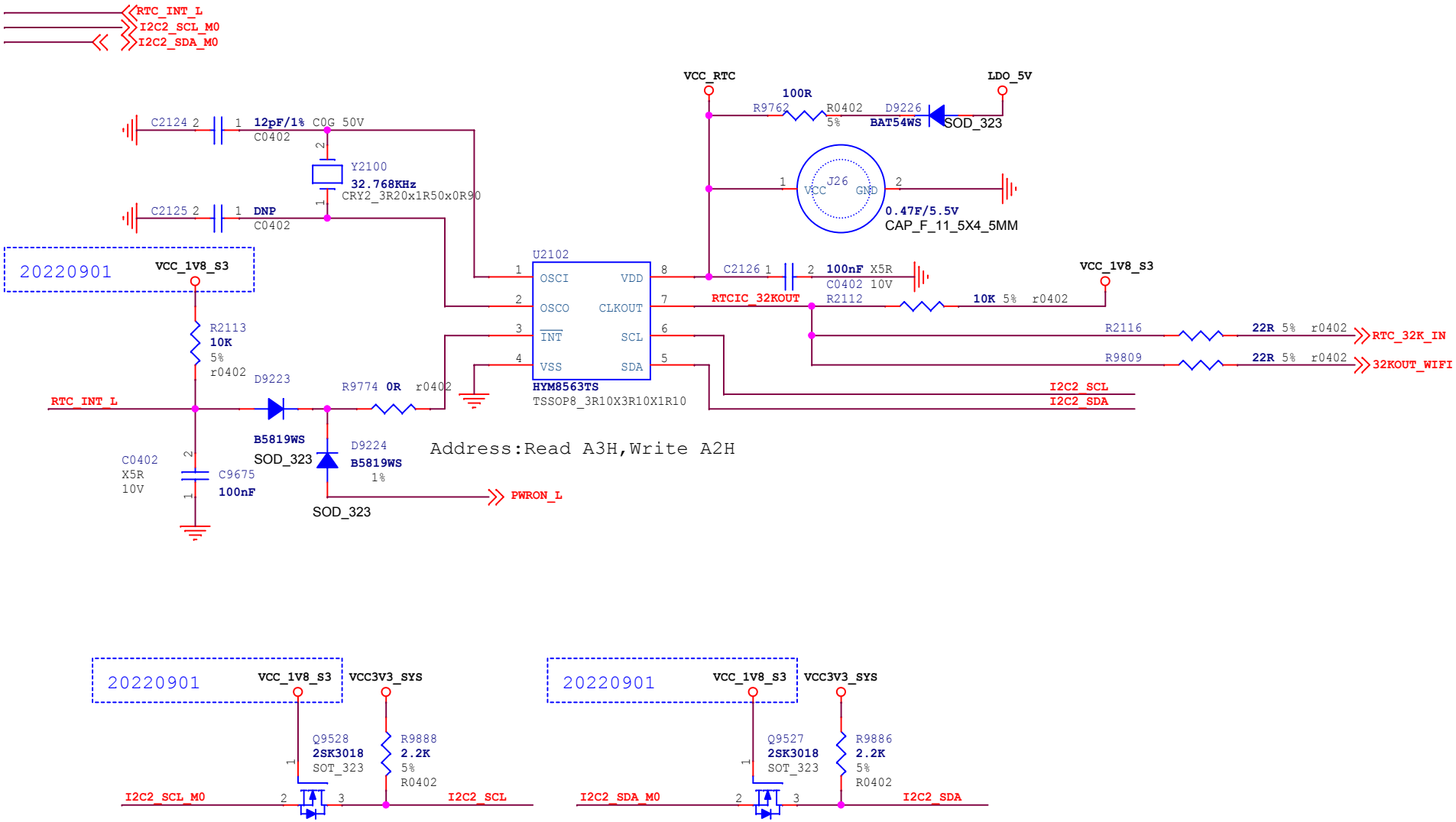

www.t-firefly.com

Project: Schematic Name

File: MB-RK3588S-JD4 REV:V1.0

Create Date: Tuesday, April 06, 2021 Page Num:5

Modify Date: Thursday, September 01, 2022 Page Total:31

MicroSD Card

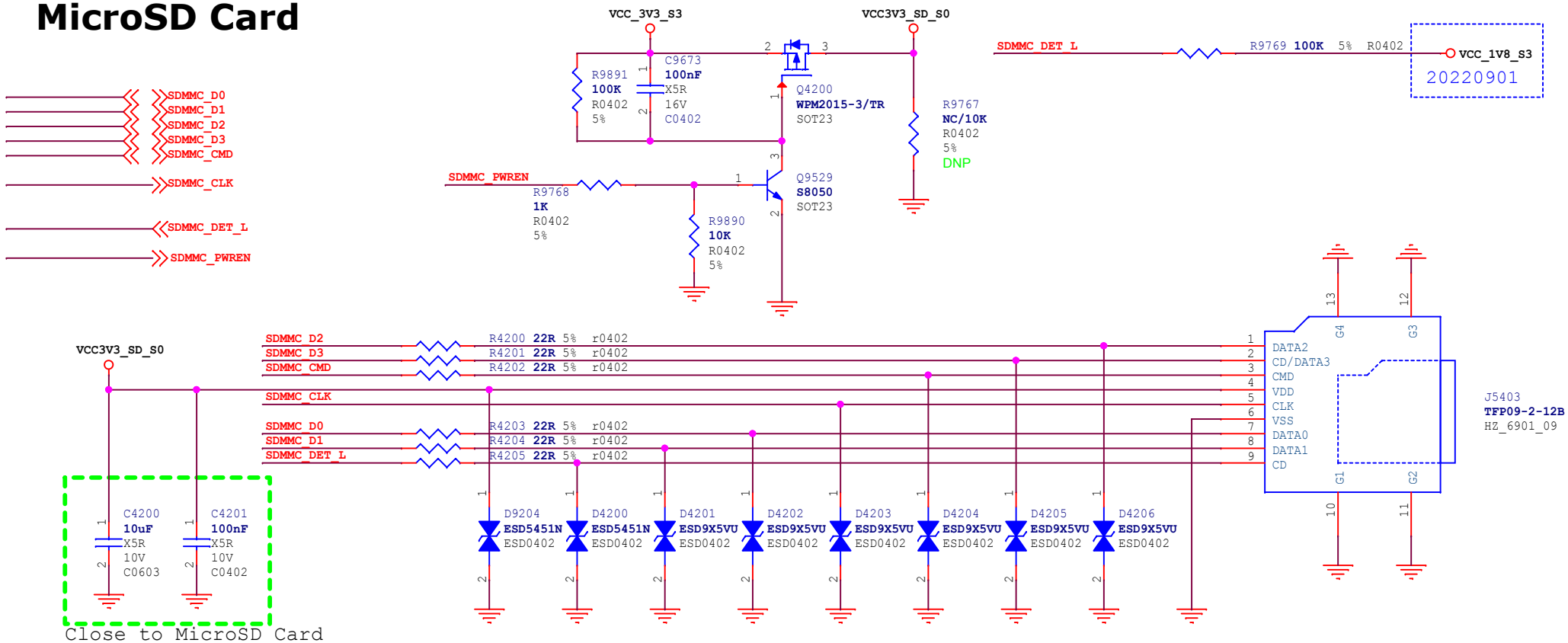

www.t-firefly.com

Project: Schematic Name	
File: MB-RK3588S-JD4	REV:V1.0
Create Date: Tuesday, December 28, 2021	Page Num:6
Modify Date: Thursday, September 01, 2022	Page Total:31

USB Type-C Port

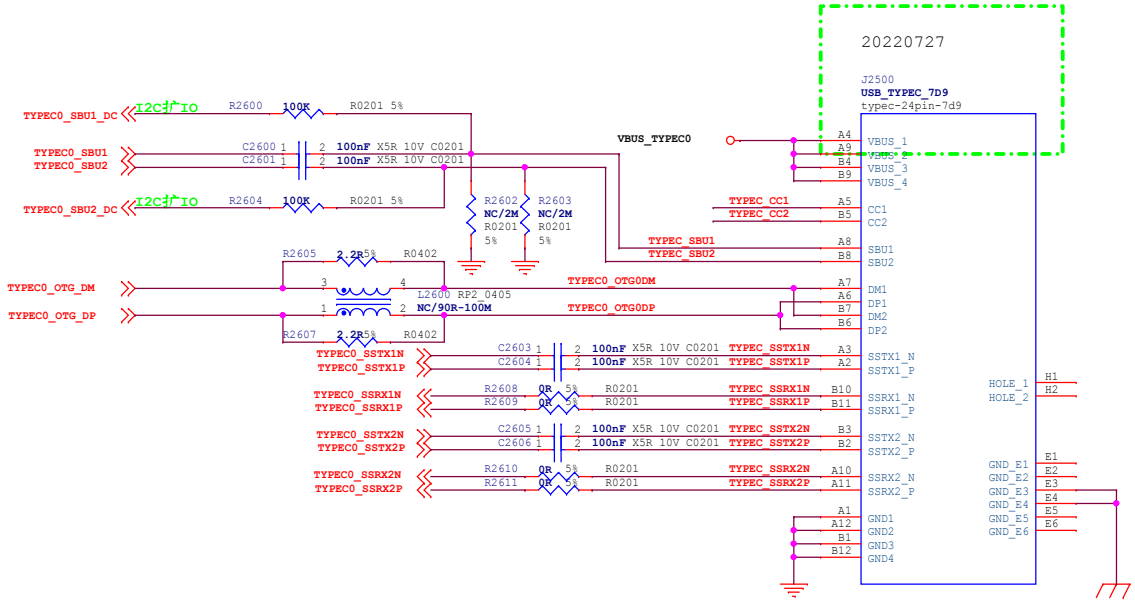

USB Detection

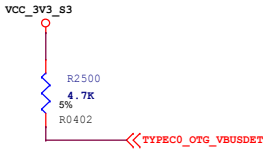

USB Type-C CC CTRL

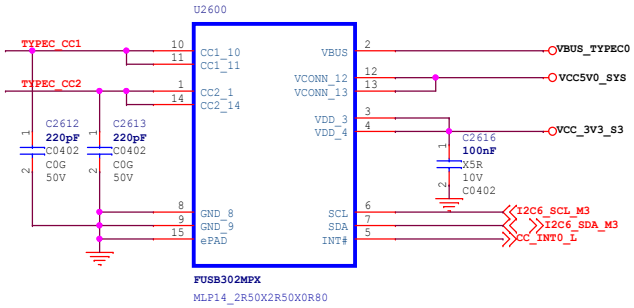

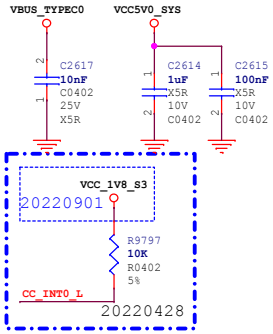

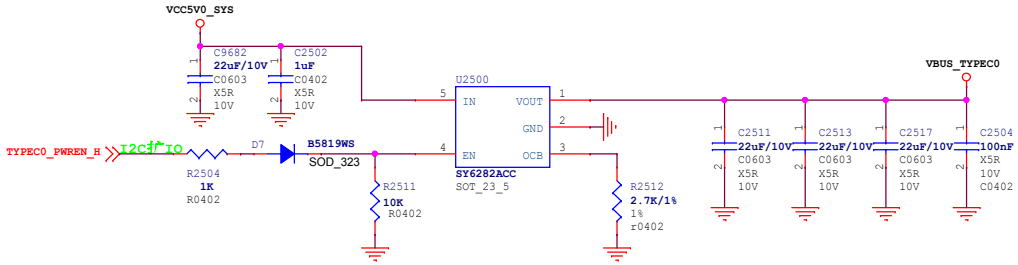

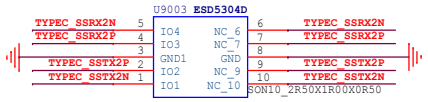

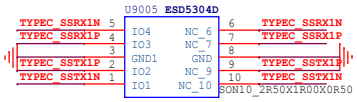

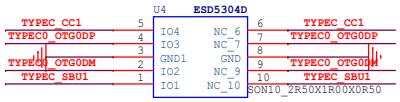

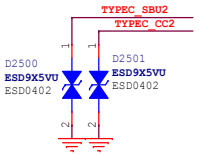

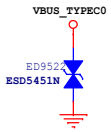

www.t-firefly.com

Project: Schematic Name	
File: MB-RK3588S-JD4	REV: V1.0
Create Date: Tuesday, April 06, 2021	Page Num: 7
Modify Date: Thursday, September 01, 2022	Page Total: 31

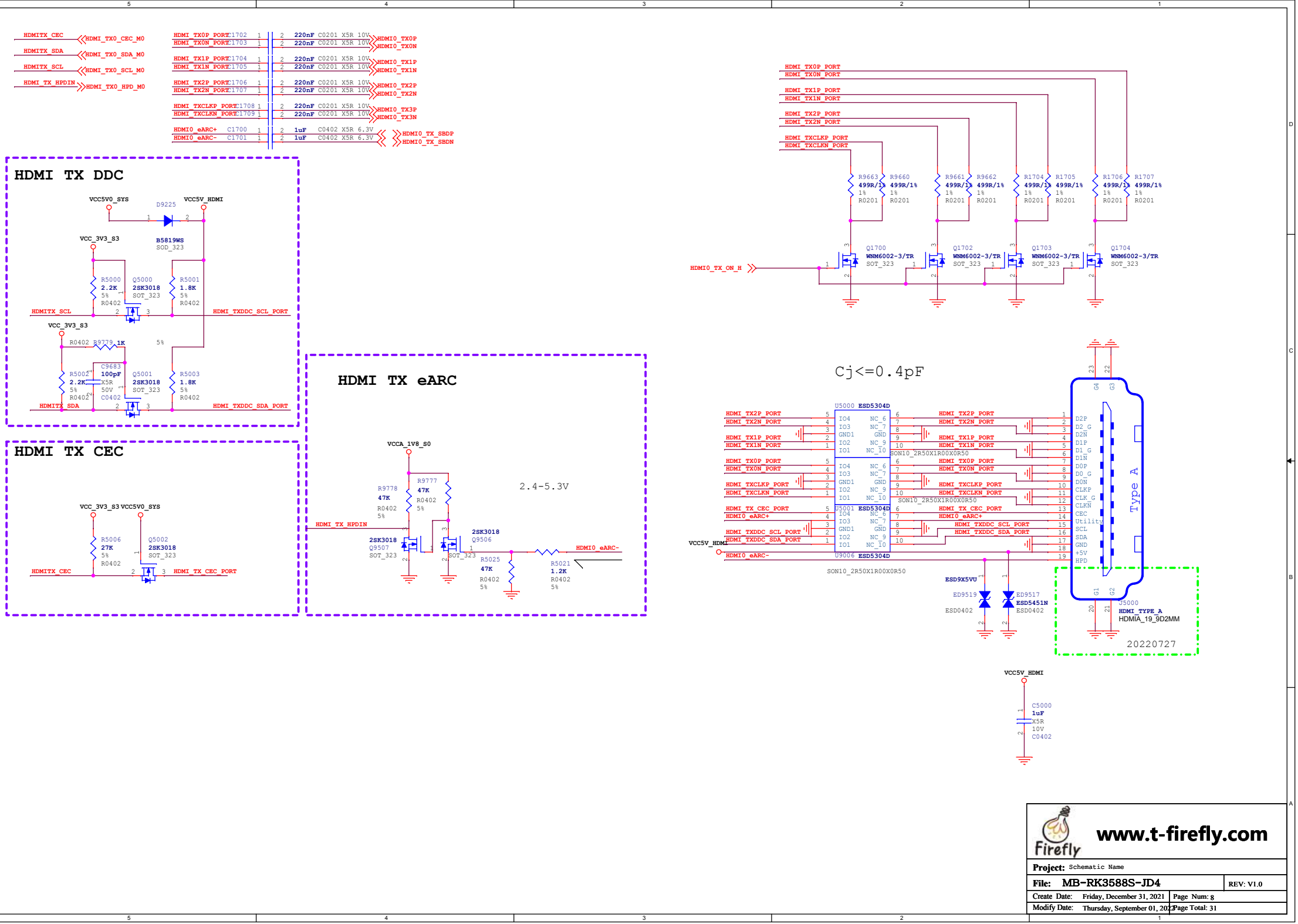
HDMITX_CEC
HDMI_TX0_CEC_M0
HDMITX_SDA
HDMI_TX0_SDA_M0
HDMITX_SCL
HDMI_TX0_SCL_M0
HDMI_TX_HPDIN
HDMI_TX0_HPD_M0
HDMI_TX0P_PORT C1702 220nF C0201 X5R 10V HDMI0_TX0P
HDMI_TX0N_PORT C1703 220nF C0201 X5R 10V HDMI0_TX0N
HDMI_TX1P_PORT C1704 220nF C0201 X5R 10V HDMI0_TX1P
HDMI_TX1N_PORT C1705 220nF C0201 X5R 10V HDMI0_TX1N
HDMI_TX2P_PORT C1706 220nF C0201 X5R 10V HDMI0_TX2P
HDMI_TX2N_PORT C1707 220nF C0201 X5R 10V HDMI0_TX2N
HDMI_TXCLKP_PORT C1708 220nF C0201 X5R 10V HDMI0_TX3P
HDMI_TXCLKN_PORT C1709 220nF C0201 X5R 10V HDMI0_TX3N
HDMI0_eARC+ C1700 1uF C0402 X5R 6.3V HDMI0_TX_SBDP
HDMI0_eARC- C1701 1uF C0402 X5R 6.3V HDMI0_TX_SBDN
HDMI TX DDC
VCC5V0_SYS
D9225
VCC5V_HDMI
B5819WS
SOD_323
VCC_3V3_S3
R5000 2.2K 5% R0402
Q5000 2SK3018 SOT_323
R5001 1.8K 5% R0402
HDMITX_SCL
HDMI_TXDDC_SCL_PORT
R9779 1K
C9683 100pF X5R 50V C0402
R5002 2.2K 5% R0402
Q5001 2SK3018 SOT_323
R5003 1.8K 5% R0402
HDMITX_SDA
HDMI_TXDDC_SDA_PORT
HDMI TX CEC
R5006 27K 5% R0402
Q5002 2SK3018 SOT_323
HDMITX_CEC
HDMI_TX_CEC_PORT
HDMI TX eARC
VCCA_1V8_S0
R9778 47K R0402 5%
R9777 47K R0402 5%
2.4-5.3V
HDMI_TX_HPDIN
2SK3018 Q9507 SOT_323
2SK3018 Q9506 SOT_323
R5025 47K R0402 5%
R5021 1.2K R0402 5%
HDMI0_eARC-
HDMI0_TX_ON_H
R9663 499R/1% 1% R0201
R9660 499R/1% 1% R0201
R9661 499R/1% 1% R0201
R9662 499R/1% 1% R0201
R1704 499R/1% 1% R0201
R1705 499R/1% 1% R0201
R1706 499R/1% 1% R0201
R1707 499R/1% 1% R0201
Q1700 WNM6002-3/TR SOT_323
Q1702 WNM6002-3/TR SOT_323
Q1703 WNM6002-3/TR SOT_323
Q1704 WNM6002-3/TR SOT_323
Cj<=0.4pF
U5000 ESD5304D
U5001 ESD5304D
U9006 ESD5304D
SON10_2R50X1R00X0R50
VCC5V_HDMI
ESD9X5VU
ED9519 ESD0402
ED9517 ESD5451N ESD0402
J5000 HDMI_TYPE_A HDMIA_19_9D2MM
Type A
20220727
C5000 1uF X5R 10V C0402
www.t-firefly.com
Firefly
Project: Schematic Name
File: MB-RK3588S-JD4
REV: V1.0
Create Date: Friday, December 31, 2021
Page Num: 8
Modify Date: Thursday, September 01, 2022
Page Total: 31

USB3.0 HUB

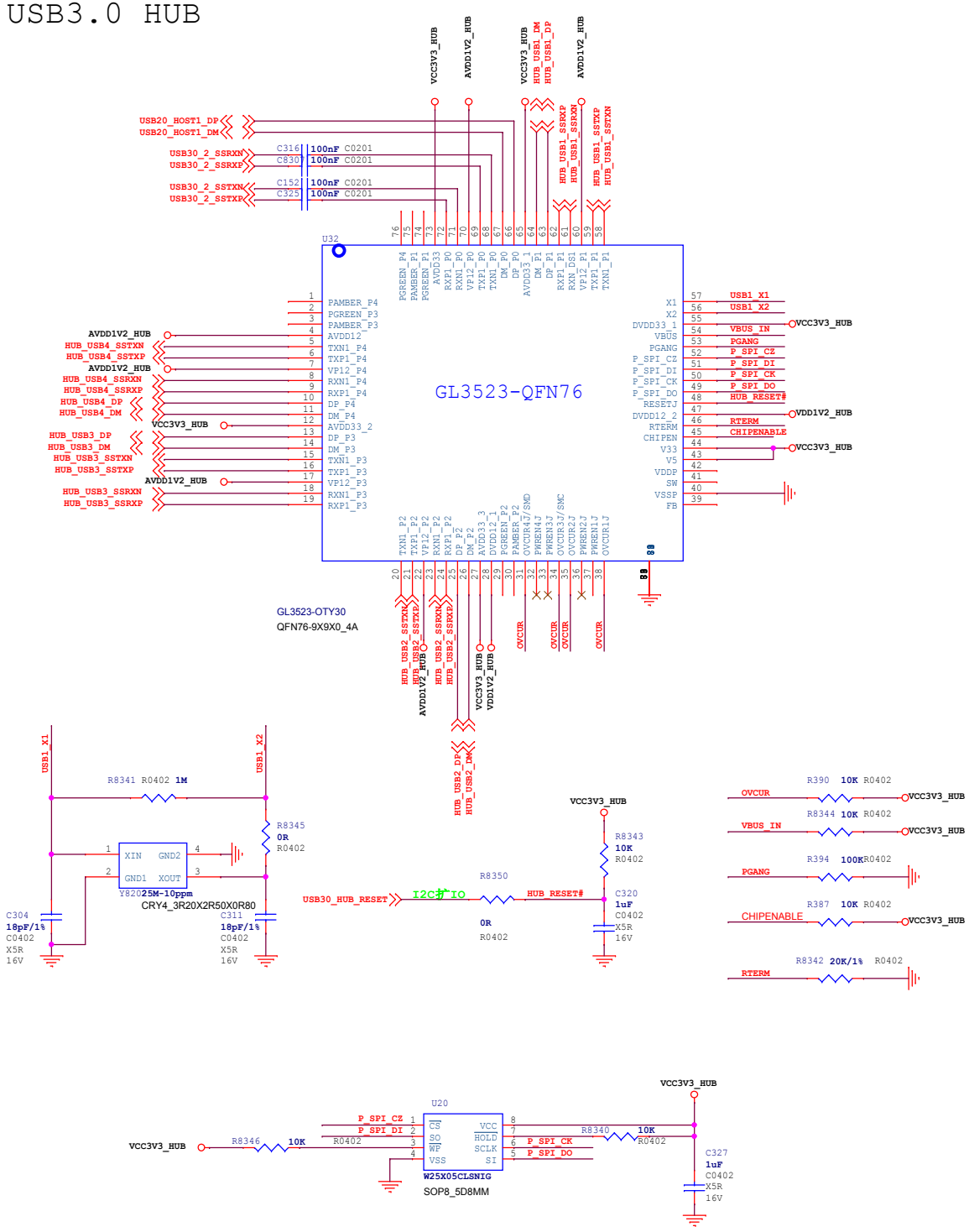

HUB_POWER

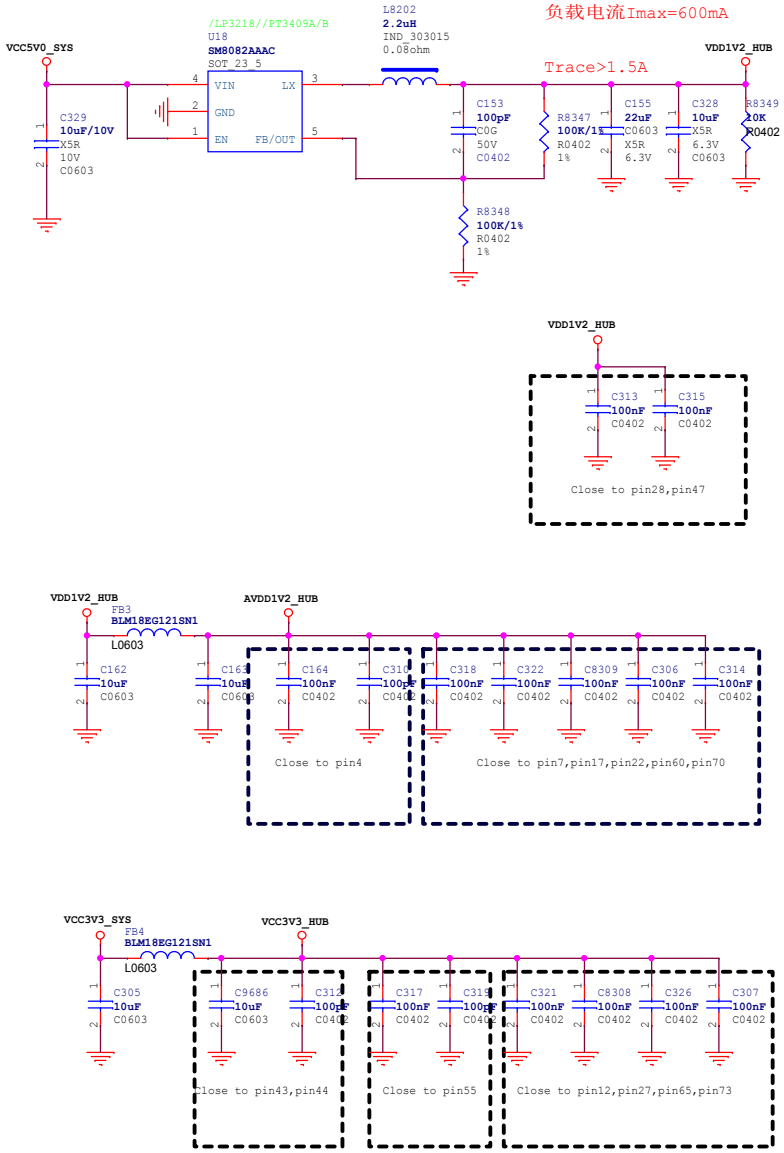

www.t-firefly.com

Project: Schematic Name	
File: MB-RK3588S-JD4	REV: V1.0
Create Date: Wednesday, February 16, 2022	Page Num: 9
Modify Date: Thursday, September 01, 2022	Page Total: 31

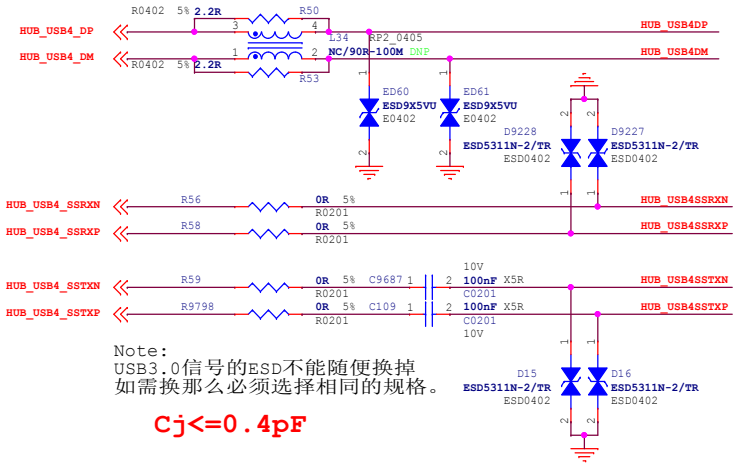

Note:
USB3.0信号的ESD不能随便换掉
如需换那么必须选择相同的规格。

Cj<=0.4pF

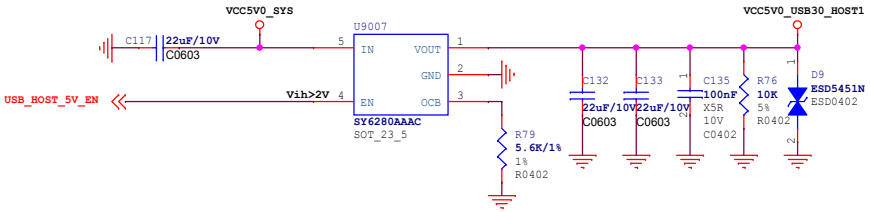

USB3.0 HOST1

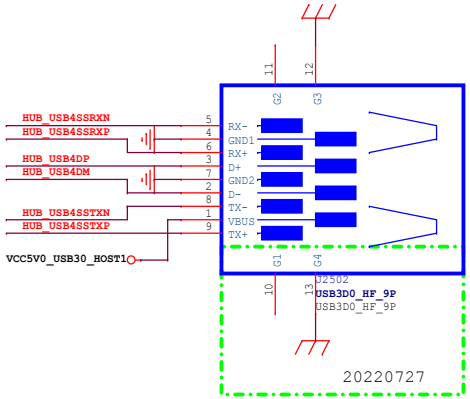

www.t-firefly.com

Project: Schematic Name	
File: MB-RK3588S-JD4	REV: V1.0
Create Date: Wednesday, February 16, 2022	Page Num: 10
Modify Date: Saturday, September 03, 2022	Page Total: 31

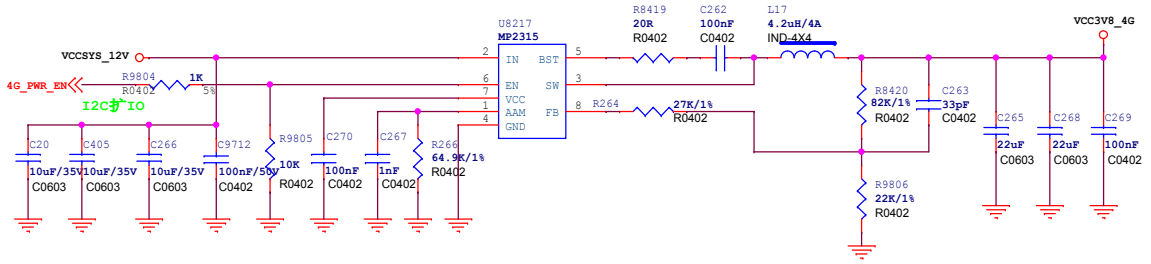

4G/5G SIM CARD

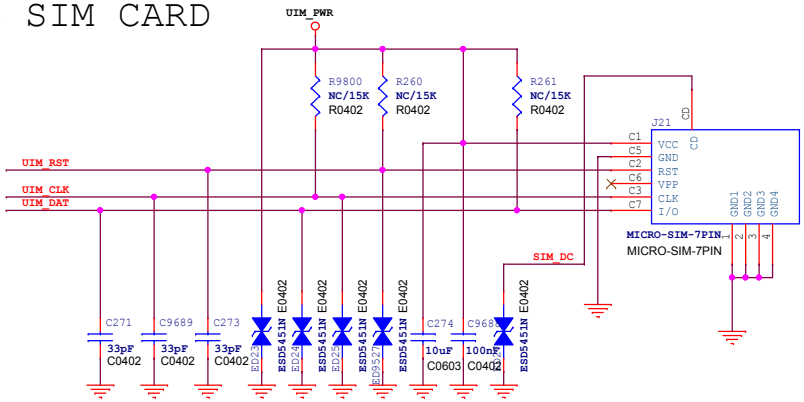

M2_NGFF-4G/5G

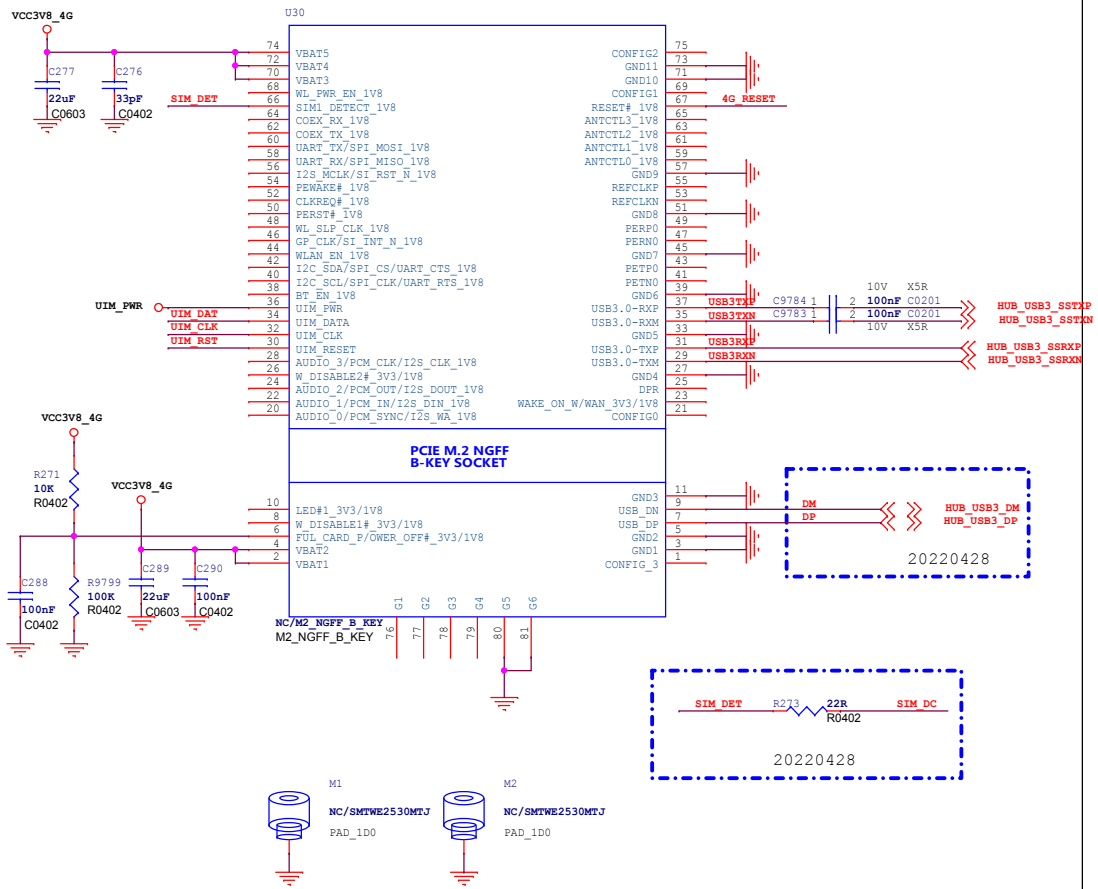

MINI PCIE-4G

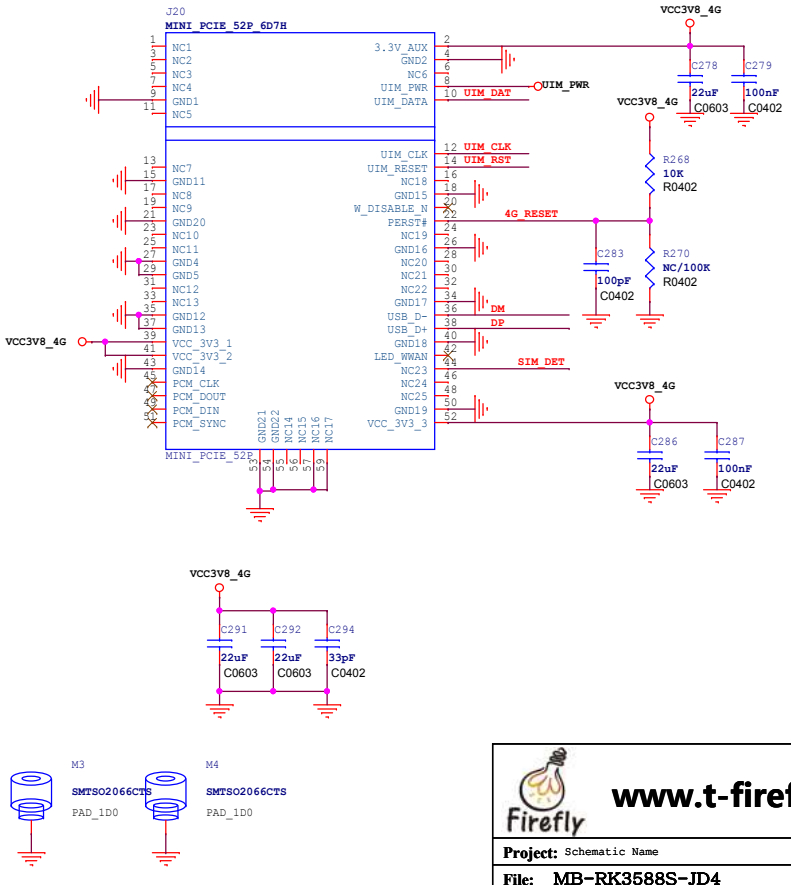

www.t-firefly.com

Project:	Schematic Name
File:	MB-RK3588S-JD4 REV: V1.0
Create Date:	Wednesday, February 16, 2022 Page Num: 11
Modify Date:	Thursday, September 01, 2022 Page Total: 31

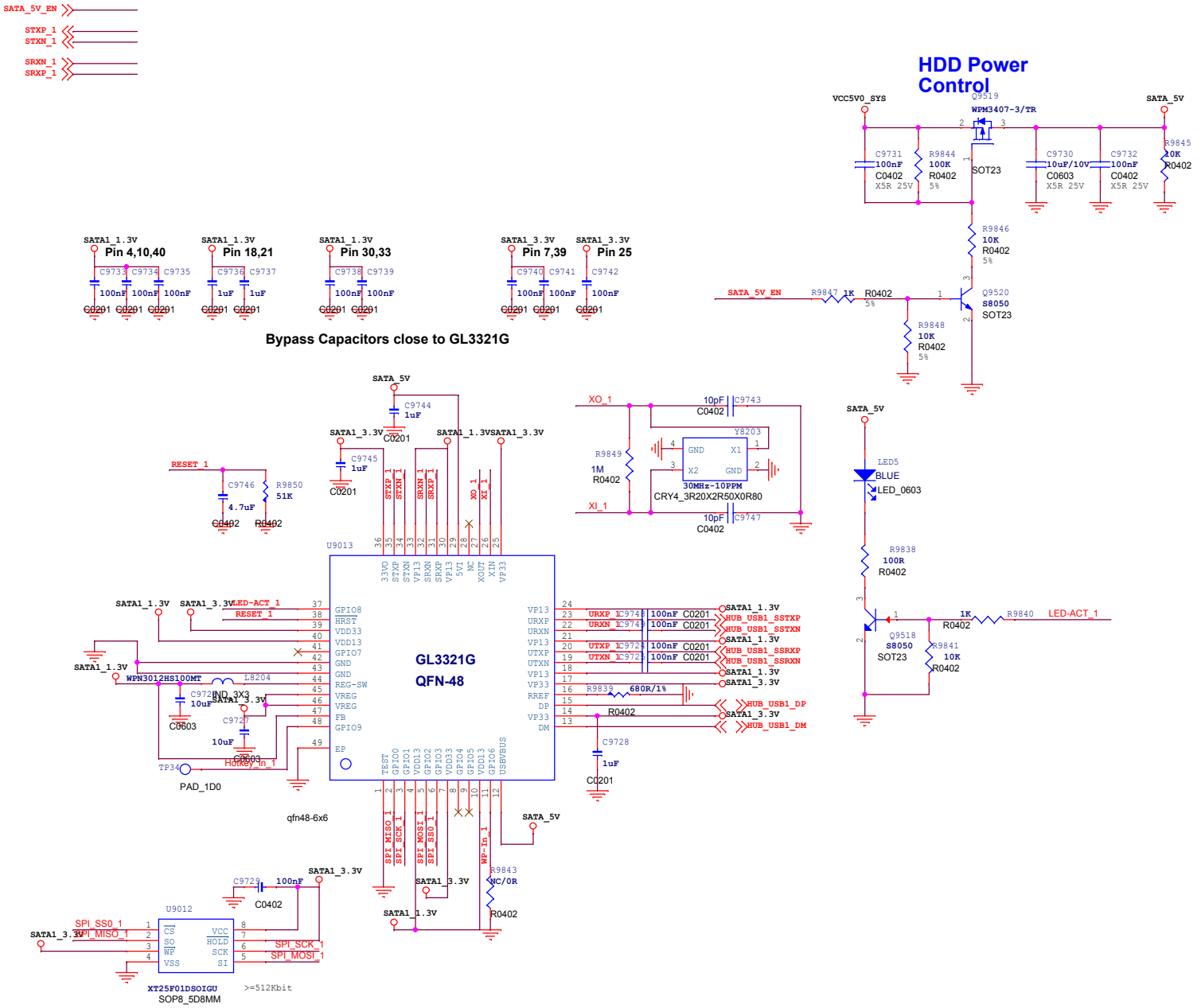

SATA3.0 Port1

www.t-firefly.com

Project:	Schematic Name
File:	MB-RK3588S-JD4
REV:	V1.0
Create Date:	Saturday, February 19, 2022
Page Num:	12
Modify Date:	Thursday, September 01, 2022
Page Total:	31

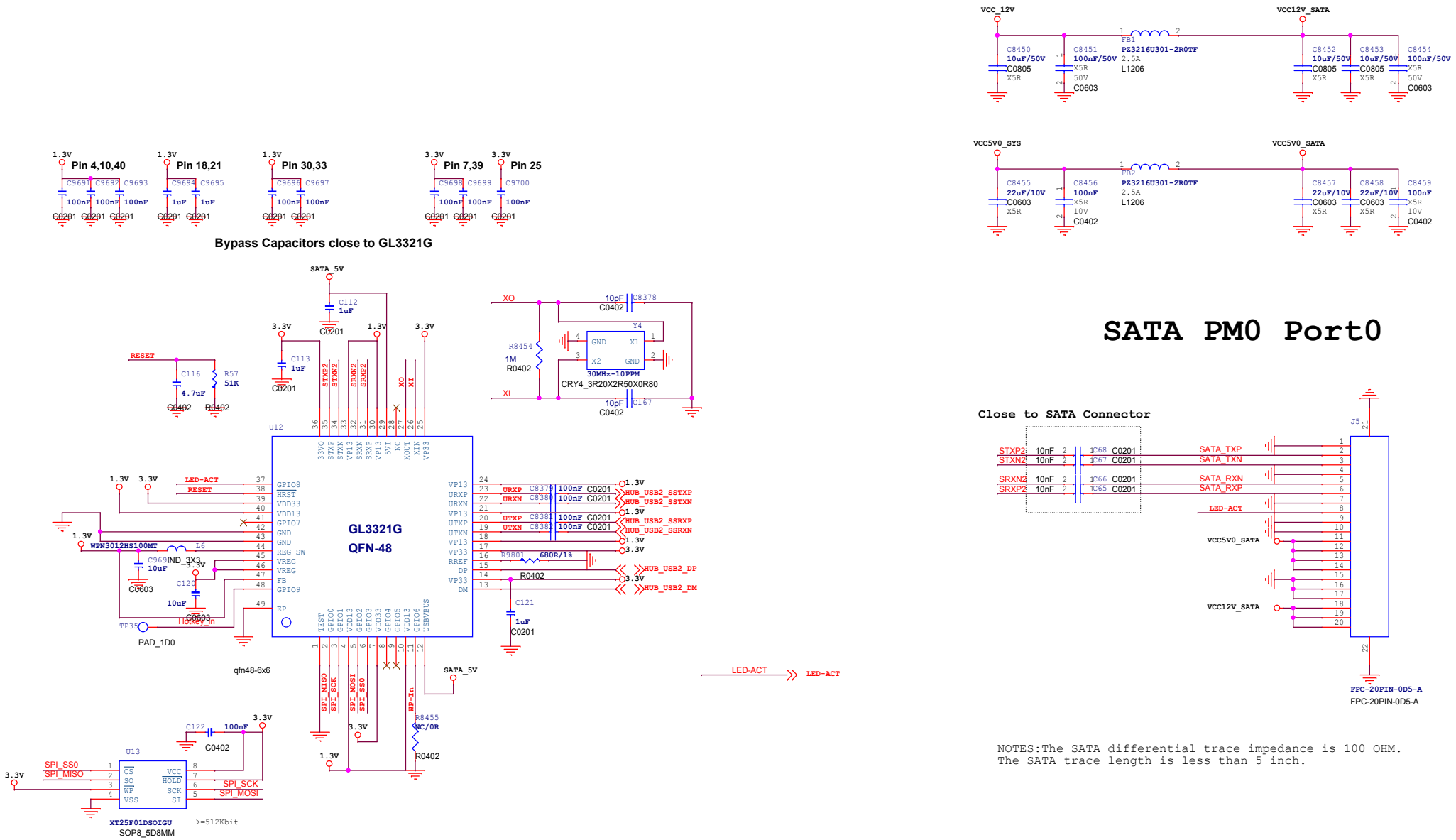

NOTES:The SATA differential trace impedance is 100 OHM.
The SATA trace length is less than 5 inch.

www.t-firefly.com

Project: Schematic Name	
File: MB-RK3588S-JD4	REV: V1.0
Create Date: Wednesday, February 16, 2022	Page Num: 13
Modify Date: Thursday, September 01, 2022	Page Total: 31

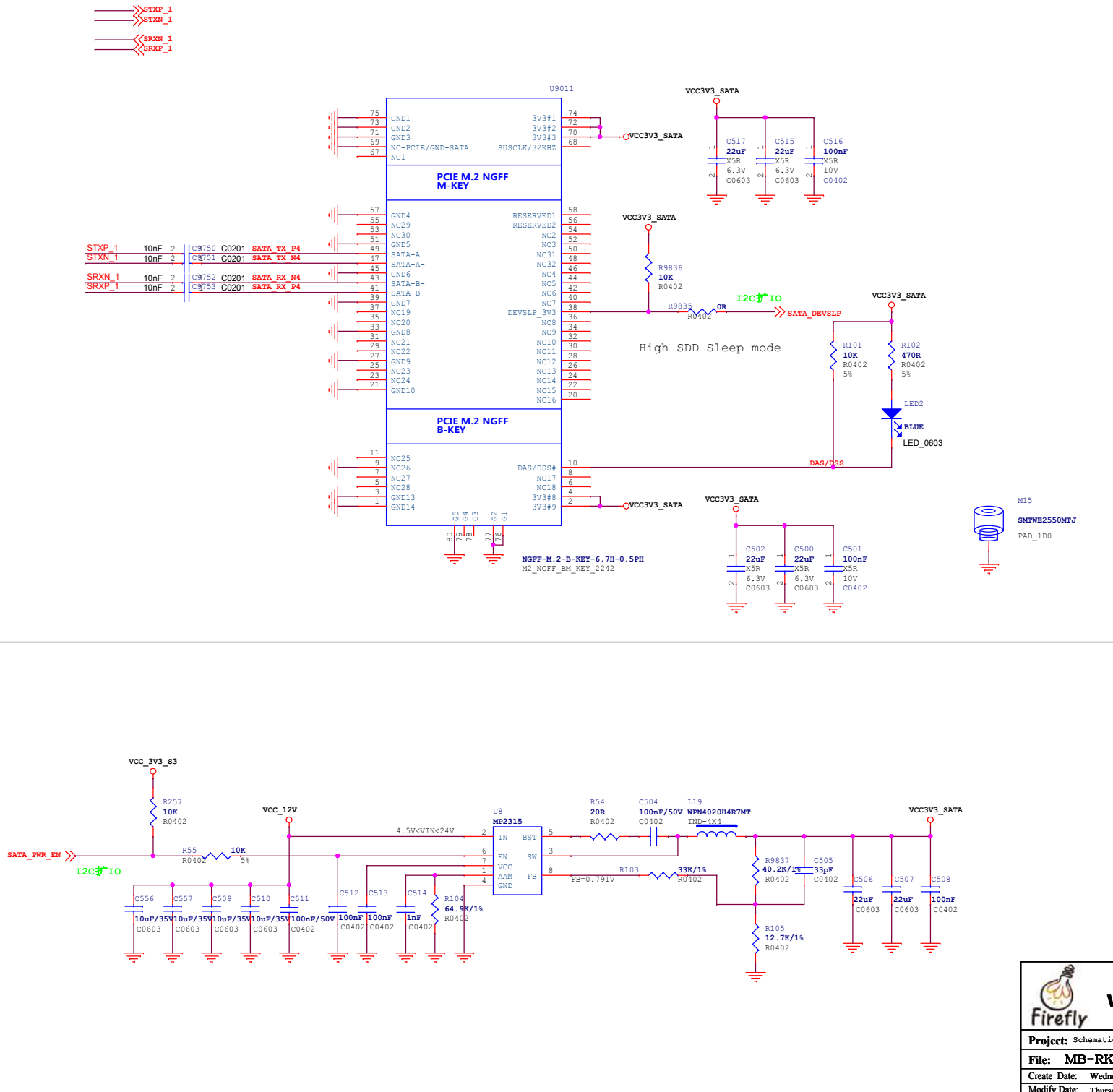

www.t-firefly.com

Project:	Schematic Name
File:	MB-RK3588S-JD4
REV:	V1.0
Create Date:	Wednesday, February 16, 2022
Page Num:	14
Modify Date:	Thursday, September 01, 2022
Page Total:	31

USB2.0 HUB

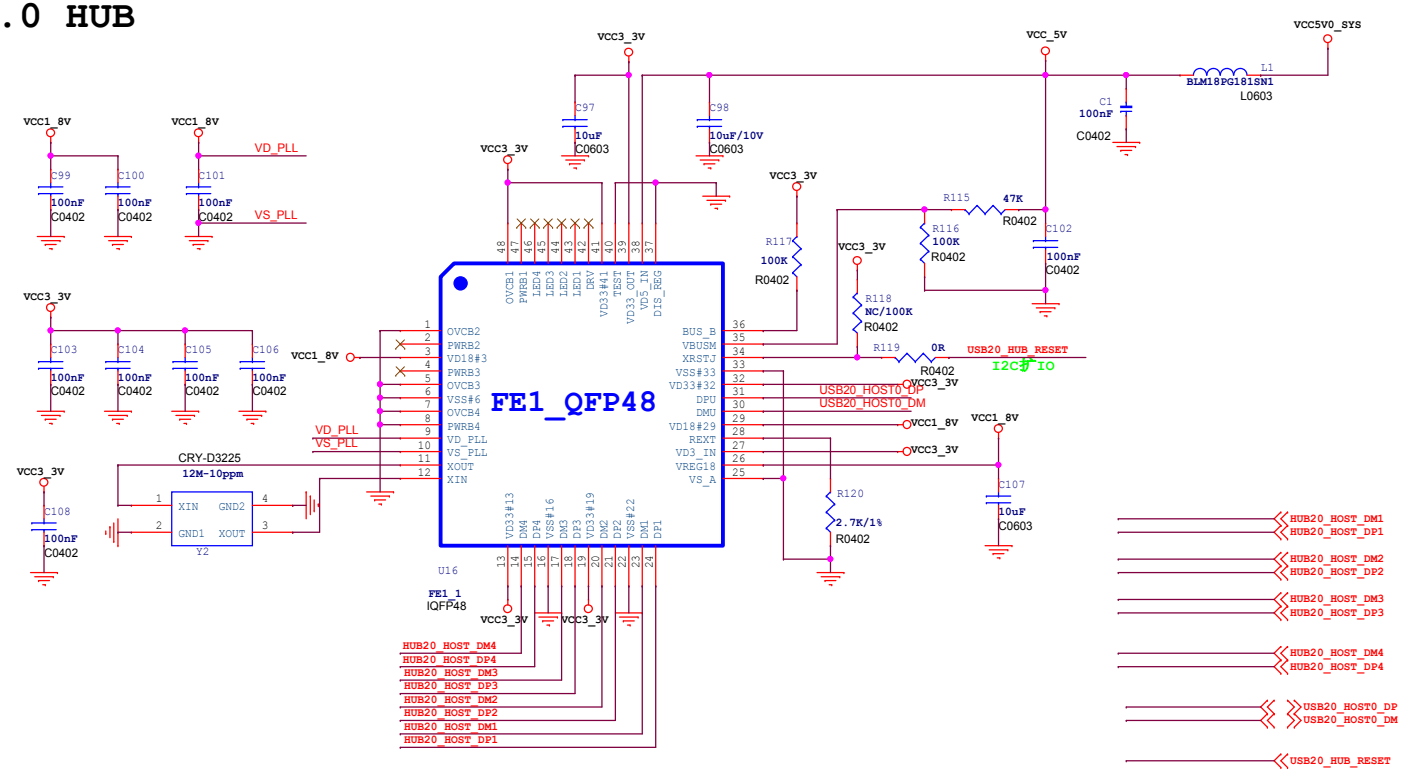

www.t-firefly.com

Project: Schematic Name	
File: MB-RK3588S-JD4	REV: V1.0
Create Date: Thursday, December 30, 2021	Page Num: 15
Modify Date: Thursday, September 01, 2022	Page Total: 31

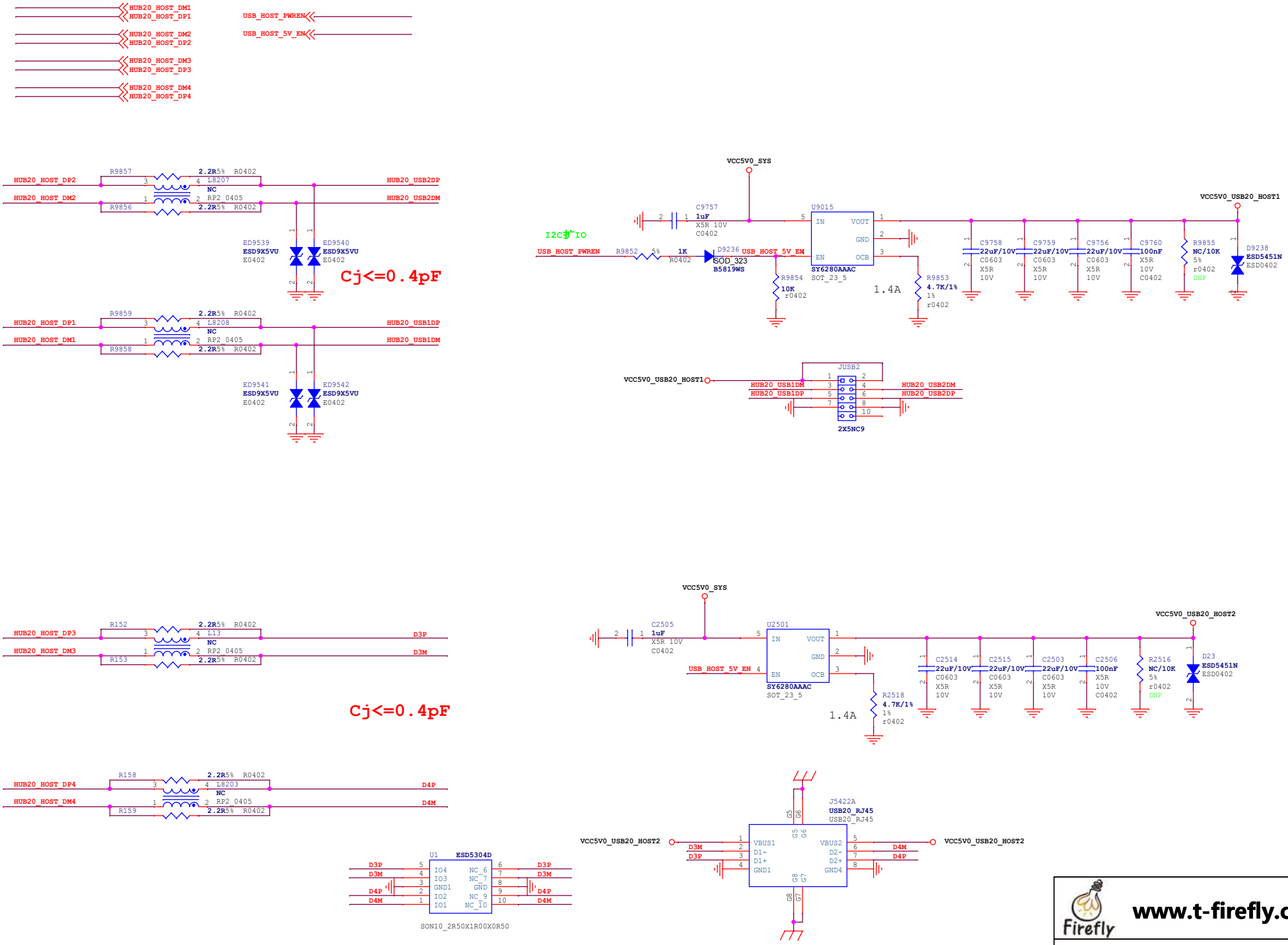
HUB20_HOST_DM1
HUB20_HOST_DP1
HUB20_HOST_DM2
HUB20_HOST_DP2
HUB20_HOST_DM3
HUB20_HOST_DP3
HUB20_HOST_DM4
HUB20_HOST_DP4
USB_HOST_PWREN
USB_HOST_5V_EN
R9857 2.2R5% R0402
L8207 NC
RP2_0405
R9856 2.2R5% R0402
HUB20_USB2DP
HUB20_USB2DM
ED9539 ESD9X5VU E0402
ED9540 ESD9X5VU E0402
Cj<=0.4pF
R9859 2.2R5% R0402
L8208 NC
R9858 2.2R5% R0402
HUB20_USB1DP
HUB20_USB1DM
ED9541 ESD9X5VU E0402
ED9542 ESD9X5VU E0402
VCC5V0_SYS
C9757 1uF X5R 10V C0402
U9015
IN VOUT GND EN OCB
SY6280AAAC SOT_23_5
I2C扩IO
R9852 5% 1K R0402
D9236 SOD_323 B5819WS
R9854 10K r0402
R9853 4.7K/1% 1% r0402
1.4A
C9758 22uF/10V C0603 X5R 10V
C9759 22uF/10V C0603 X5R 10V
C9756 22uF/10V C0603 X5R 10V
C9760 100nF X5R 10V C0402
R9855 NC/10K 5% r0402 DNP
D9238 ESD5451N ESD0402
VCC5V0_USB20_HOST1
JUSB2
2X5NC9
R152 2.2R5% R0402
L13 NC
R153 2.2R5% R0402
D3P
D3M
Cj<=0.4pF
C2505 1uF X5R 10V C0402
U2501
SY6280AAAC SOT_23_5
R2518 4.7K/1% 1% r0402
C2514 22uF/10V C0603 X5R 10V
C2515 22uF/10V C0603 X5R 10V
C2503 22uF/10V C0603 X5R 10V
C2506 100nF X5R 10V C0402
R2516 NC/10K 5% r0402 DNP
D23 ESD5451N ESD0402
VCC5V0_USB20_HOST2
R158 2.2R5% R0402
L8203 NC
R159 2.2R5% R0402
D4P
D4M
U1 ESD5304D
IO4 IO3 GND1 IO2 IO1
NC_6 NC_7 GND NC_9 NC_10
SON10_2R50X1R00X0R50
J5422A USB20_RJ45
VBUS1 D1- D1+ GND1
VBUS2 D2- D2+ GND4
Firefly
www.t-firefly.com
Project: Schematic Name
File: MB-RK3588S-JD4
REV: V1.0
Create Date: Friday, December 31, 2021
Page Num: 16
Modify Date: Thursday, September 01, 2022
Page Total: 31

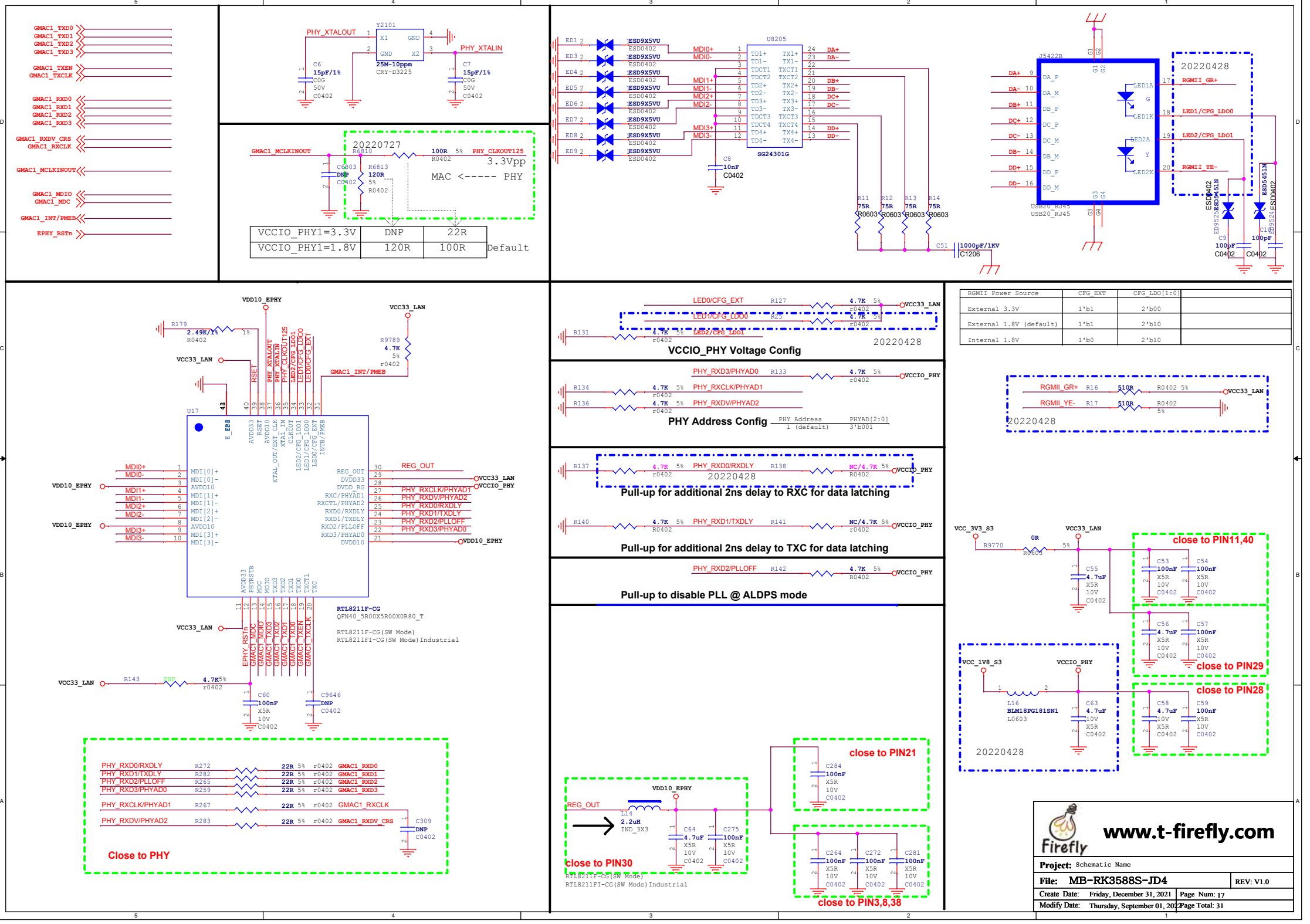
GMAC1_TXD0
GMAC1_TXD1
GMAC1_TXD2
GMAC1_TXD3
GMAC1_TXEN
GMAC1_TXCLK
GMAC1_RXD0
GMAC1_RXD1
GMAC1_RXD2
GMAC1_RXD3
GMAC1_RXDV_CRS
GMAC1_RXCLK
GMAC1_MCLKINOUT
GMAC1_MDIO
GMAC1_MDC
GMAC1_INT/PMEB
EPHY_RSTn
PHY_XTALOUT
Y2101
25M-10ppm
CRY-D3225
PHY_XTALIN
C6 15pF/1% C0G 50V C0402
C7 15pF/1% C0G 50V C0402
GMAC1_MCLKINOUT
R6810 100R 5% R0402
PHY_CLKOUT125
20220727
3.3Vpp
C6803 DNP C0402
R6813 120R 5% R0402
MAC <----- PHY
VCCIO_PHY1=3.3V DNP 22R
VCCIO_PHY1=1.8V 120R 100R Default
ESD9X5VU ESD0402
MDI0+ MDI0- MDI1+ MDI1- MDI2+ MDI2- MDI3+ MDI3-
U8205
SG24301G
TD1+ TD1- TDCT1 TDCT2 TD2+ TD2- TD3+ TD3- TDCT3 TDCT4 TD4+ TD4-
TX1+ TX1- TXCT1 TXCT2 TX2+ TX2- TX3+ TX3- TXCT3 TXCT4 TX4+ TX4-
DA+ DA- DB+ DB- DC+ DC- DD+ DD-
C8 10nF C0402
R11 75R R0603
R12 75R R0603
R13 75R R0603
R14 75R R0603
C51 1000pF/1KV C1206
J5422B
USB20_RJ45
DA_P DA_M DB_P DC_P DC_M DB_M DD_P DD_M
LED1A LED1K LED2A LED2K
20220428
RGMII_GR+
LED1/CFG_LDO0
LED2/CFG_LDO1
RGMII_YE-
ESD9525 ESD5451N ESD0402
C9 100pF C0402
C10 100pF C0402
VDD10_EPHY
VCC33_LAN
R179 2.49K/1% R0402
R9789 4.7K 5% r0402
GMAC1_INT/PMEB
RSET
PHY_XTALOUT
PHY_XTALIN
PHY_CLKOUT125
LED2/CFG_LDO1
LED1/CFG_LDO0
LED0/CFG_EXT
U17
E_PAD
AVDD33 RSET AVDD10 XTAL_OUT/EXT_CLK XTAL_IN CLKOUT LED2/CFG_LDO1 LED1/CFG_LDO0 LED0/CFG_EXT INTB/PMEB
MDI0+ MDI0- MDI1+ MDI1- MDI2+ MDI2- MDI3+ MDI3-
MDI[0]+ MDI[0]- AVDD10 MDI[1]+ MDI[1]- MDI[2]+ MDI[2]- AVDD10 MDI[3]+ MDI[3]-
REG_OUT DVDD33 DVDD_RG RXC/PHYAD1 RXCTL/PHYAD2 RXD0/RXDLY RXD1/TXDLY RXD2/PLLOFF RXD3/PHYAD0 DVDD10
PHY_RXCLK/PHYAD1 PHY_RXDV/PHYAD2 PHY_RXD0/RXDLY PHY_RXD1/TXDLY PHY_RXD2/PLLOFF PHY_RXD3/PHYAD0
AVDD33 PHYRSTB MDC MDIO TXD3 TXD2 TXD1 TXD0 TXCTL TXC
EPHY_RSTn GMAC1_MDC GMAC1_MDIO GMAC1_TXD3 GMAC1_TXD2 GMAC1_TXD1 GMAC1_TXD0 GMAC1_TXEN GMAC1_TXCLK
RTL8211F-CG
QFN40_5R00X5R00X0R80_T
RTL8211F-CG(SW Mode)
RTL8211FI-CG(SW Mode)Industrial
R143 DNP 4.7K 5% r0402
C60 100nF X5R 10V C0402
C9646 DNP C0402
PHY_RXD0/RXDLY R272 22R 5% r0402 GMAC1_RXD0
PHY_RXD1/TXDLY R282 22R 5% r0402 GMAC1_RXD1
PHY_RXD2/PLLOFF R265 22R 5% r0402 GMAC1_RXD2
PHY_RXD3/PHYAD0 R259 22R 5% r0402 GMAC1_RXD3
PHY_RXCLK/PHYAD1 R267 22R 5% r0402 GMAC1_RXCLK
PHY_RXDV/PHYAD2 R283 22R 5% r0402 GMAC1_RXDV_CRS
C309 DNP C0402
Close to PHY
LED0/CFG_EXT R127 4.7K 5% r0402 VCC33_LAN
LED1/CFG_LDO0 R25 4.7K 5% r0402
R131 4.7K 5% r0402 LED2/CFG_LDO1
20220428
VCCIO_PHY Voltage Config
PHY_RXD3/PHYAD0 R133 4.7K 5% r0402 VCCIO_PHY
R134 4.7K 5% r0402 PHY_RXCLK/PHYAD1
R136 4.7K 5% r0402 PHY_RXDV/PHYAD2
PHY Address Config
PHY Address PHYAD[2:0]
1 (default) 3'b001
R137 4.7K 5% r0402 PHY_RXD0/RXDLY R138 NC/4.7K 5% R0402 VCCIO_PHY
20220428
Pull-up for additional 2ns delay to RXC for data latching
R140 4.7K 5% R0402 PHY_RXD1/TXDLY R141 NC/4.7K 5% r0402 VCCIO_PHY
Pull-up for additional 2ns delay to TXC for data latching
PHY_RXD2/PLLOFF R142 4.7K 5% R0402 VCCIO_PHY
Pull-up to disable PLL @ ALDPS mode
RGMII_GR+ R16 510R R0402 5% VCC33_LAN
RGMII_YE- R17 510R R0402 5%
20220428
VCC_3V3_S3
R9770 0R R0603 5%
VCC33_LAN
C55 4.7uF X5R 10V C0402
close to PIN11,40
C53 100nF X5R 10V C0402
C54 100nF X5R 10V C0402
C56 4.7uF X5R 10V C0402
C57 100nF X5R 10V C0402
close to PIN29
VCC_1V8_S3
VCCIO_PHY
L16 BLM18PG181SN1 L0603
C63 4.7uF 10V X5R C0402
close to PIN28
C58 4.7uF 10V X5R C0402
C59 100nF X5R 10V C0402
20220428
VDD10_EPHY
REG_OUT
L14 2.2uH IND_3X3
C64 4.7uF X5R 10V C0402
C275 100nF X5R 10V C0402
close to PIN30
RTL8211F-CG(SW Mode)
RTL8211FI-CG(SW Mode)Industrial
close to PIN21
C284 100nF X5R 10V C0402
C264 100nF X5R 10V C0402
C272 100nF X5R 10V C0402
C281 100nF X5R 10V C0402
close to PIN3,8,38
RGMII Power Source CFG_EXT CFG_LDO[1:0]
External 3.3V 1'b1 2'b00
External 1.8V (default) 1'b1 2'b10
Internal 1.8V 1'b0 2'b10
www.t-firefly.com
Firefly
Project: Schematic Name
File: MB-RK3588S-JD4
REV: V1.0
Create Date: Friday, December 31, 2021
Page Num: 17
Modify Date: Thursday, September 01, 2022
Page Total: 31

PCIe WIFI6/BT Module-2T2R

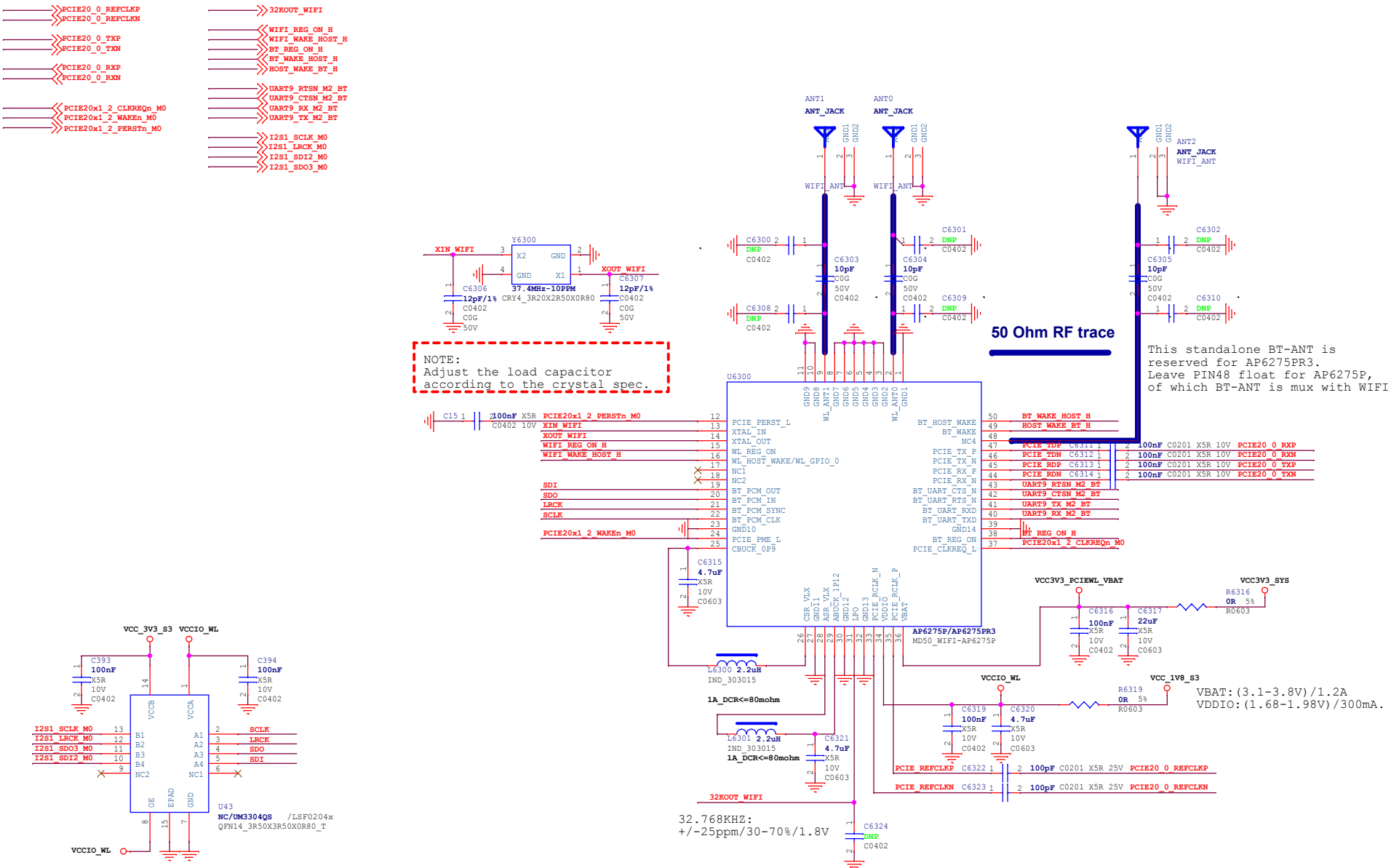

Project:	Schematic Name
File:	MB-RK3588S-JD4
REV:	V1.0
Create Date:	Friday, April 16, 2021
Page Num:	18
Modify Date:	Thursday, September 01, 2022
Page Total:	31

www.t-firefly.com

CODEC ES8388

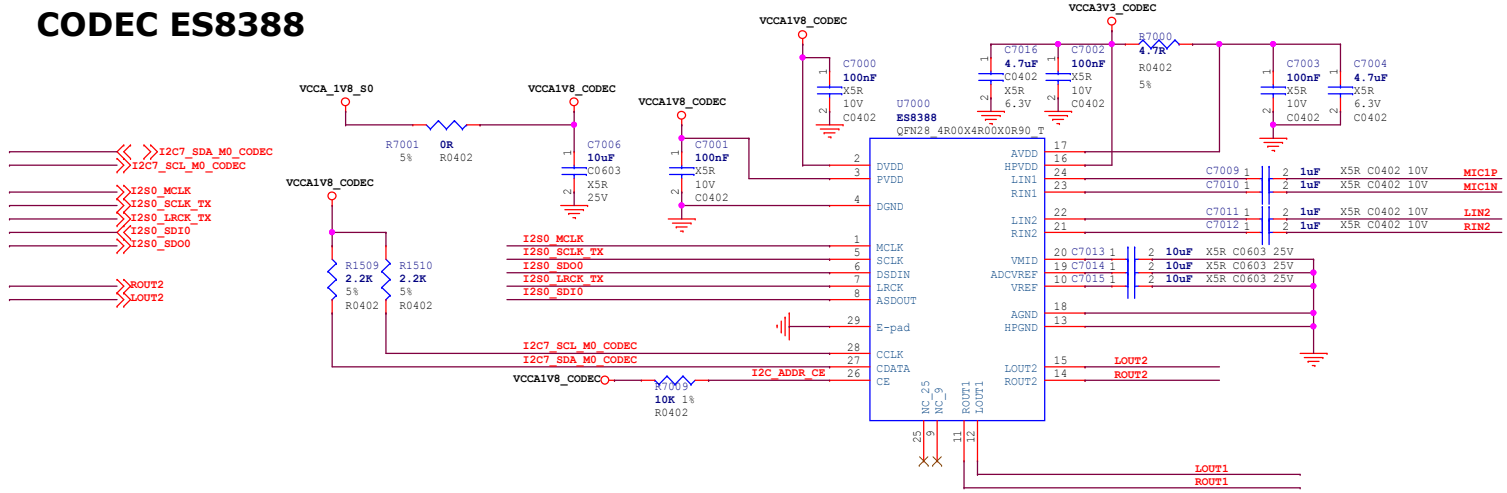

Headphone

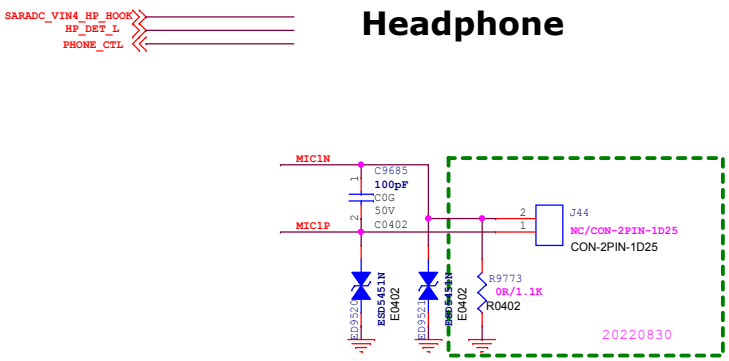

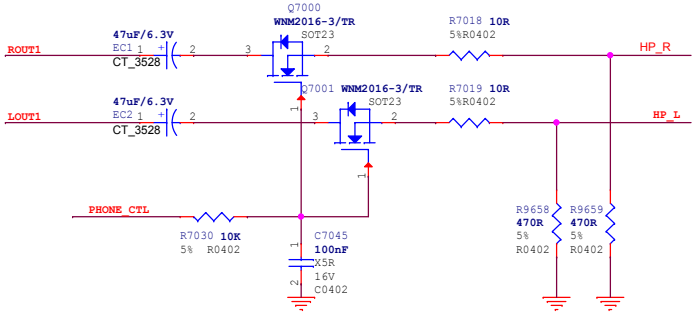

第一层MIC

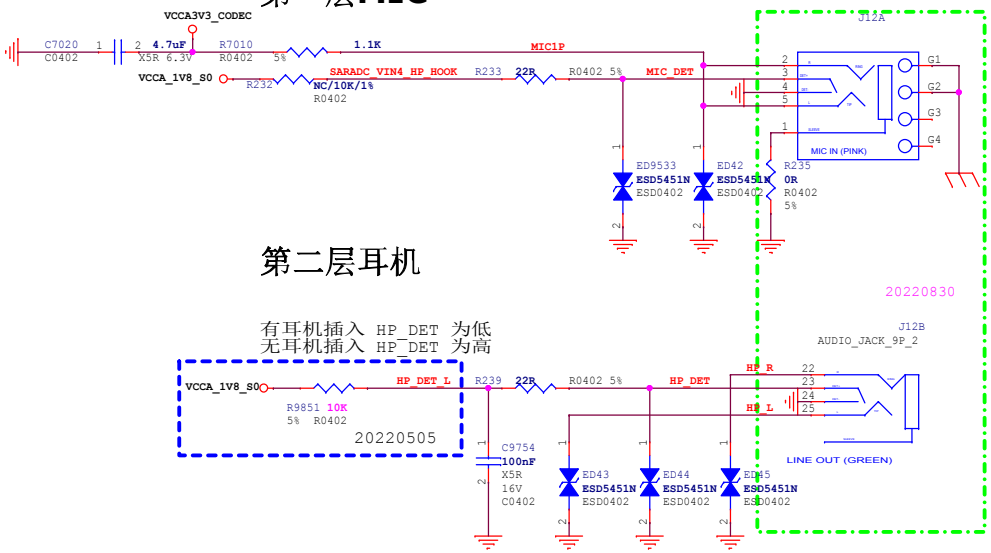

第二层耳机

有耳机插入 HP_DET 为低
无耳机插入 HP_DET 为高

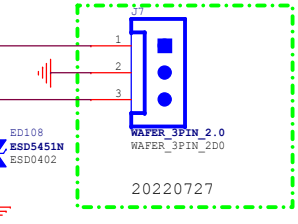

www.t-firefly.com

Project: Schematic Name	
File: MB-RK3588S-JD4	REV: V1.0
Create Date: Tuesday, April 06, 2021	Page Num: 19
Modify Date: Thursday, September 01, 2022	Page Total: 31

SPEAKER

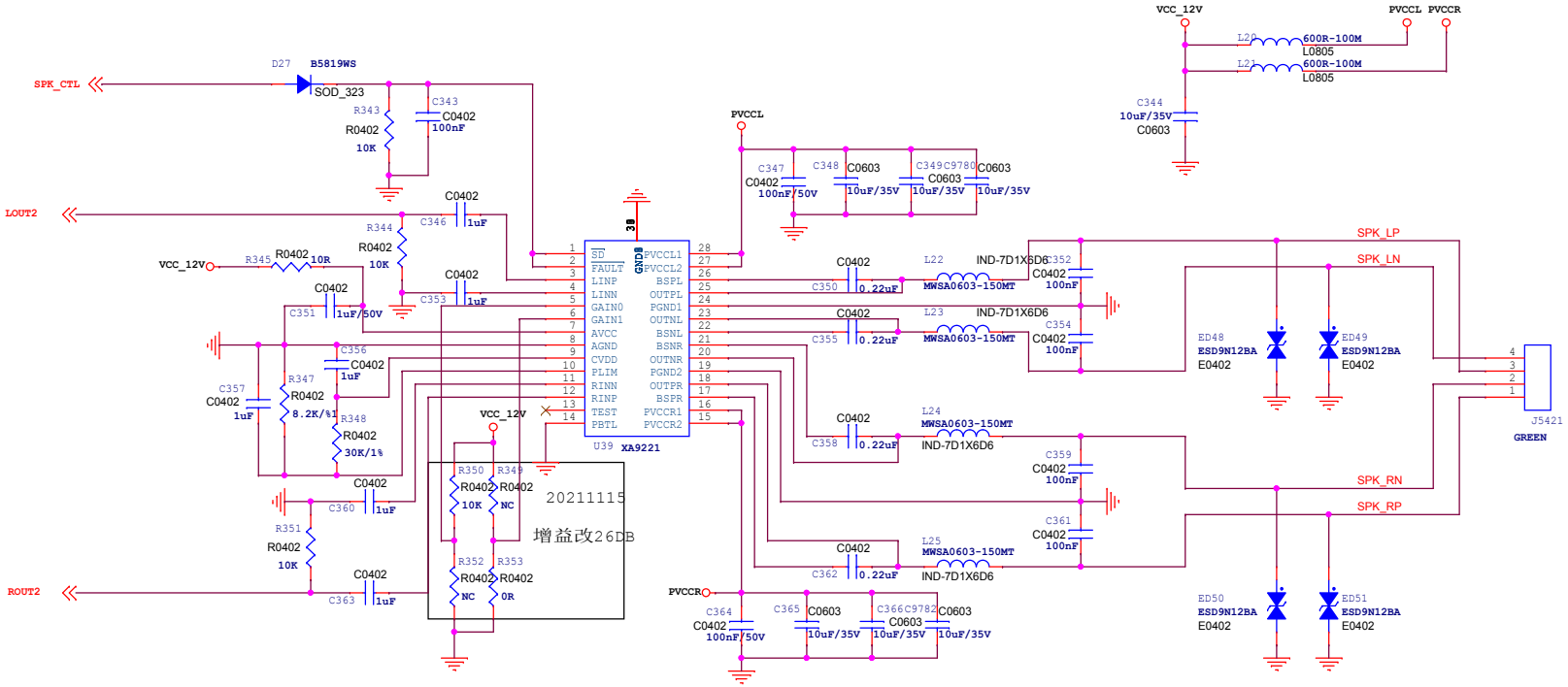

www.t-firefly.com

Project: Schematic Name	
File: MB-RK3588S-JD4	REV: V1.0
Create Date: Wednesday, February 16, 2022	Page Num: 20
Modify Date: Thursday, September 01, 2022	Page Total: 31

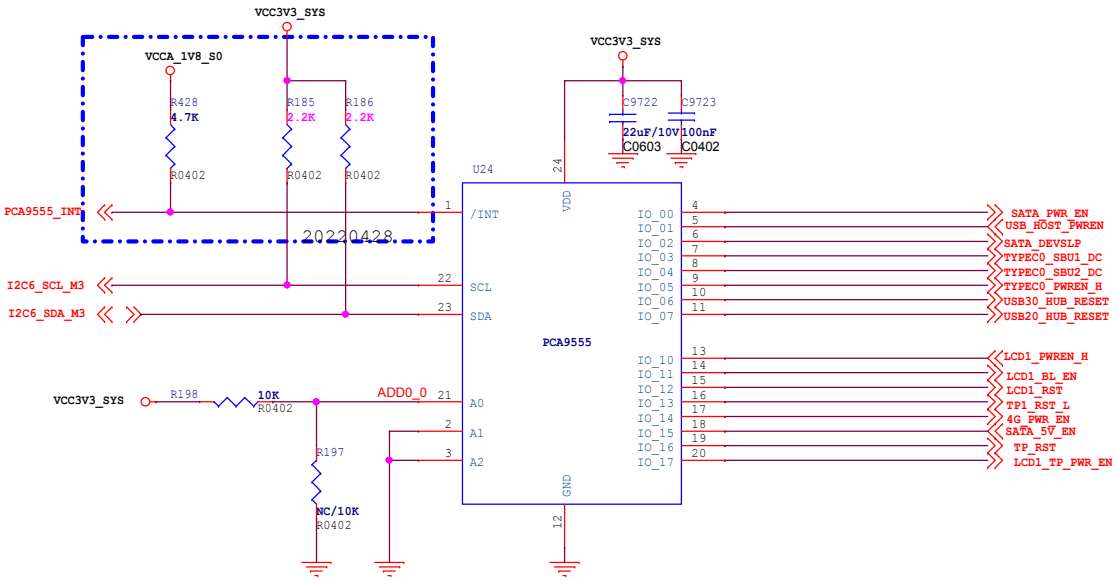

www.t-firefly.com

Project: Schematic Name	
File: MB-RK3588S-JD4	REV:V1.0
Create Date: Thursday, February 17, 2022	Page Num:21
Modify Date: Thursday, September 01, 2022	Page Total:31

MIPI-CSI_RX CON

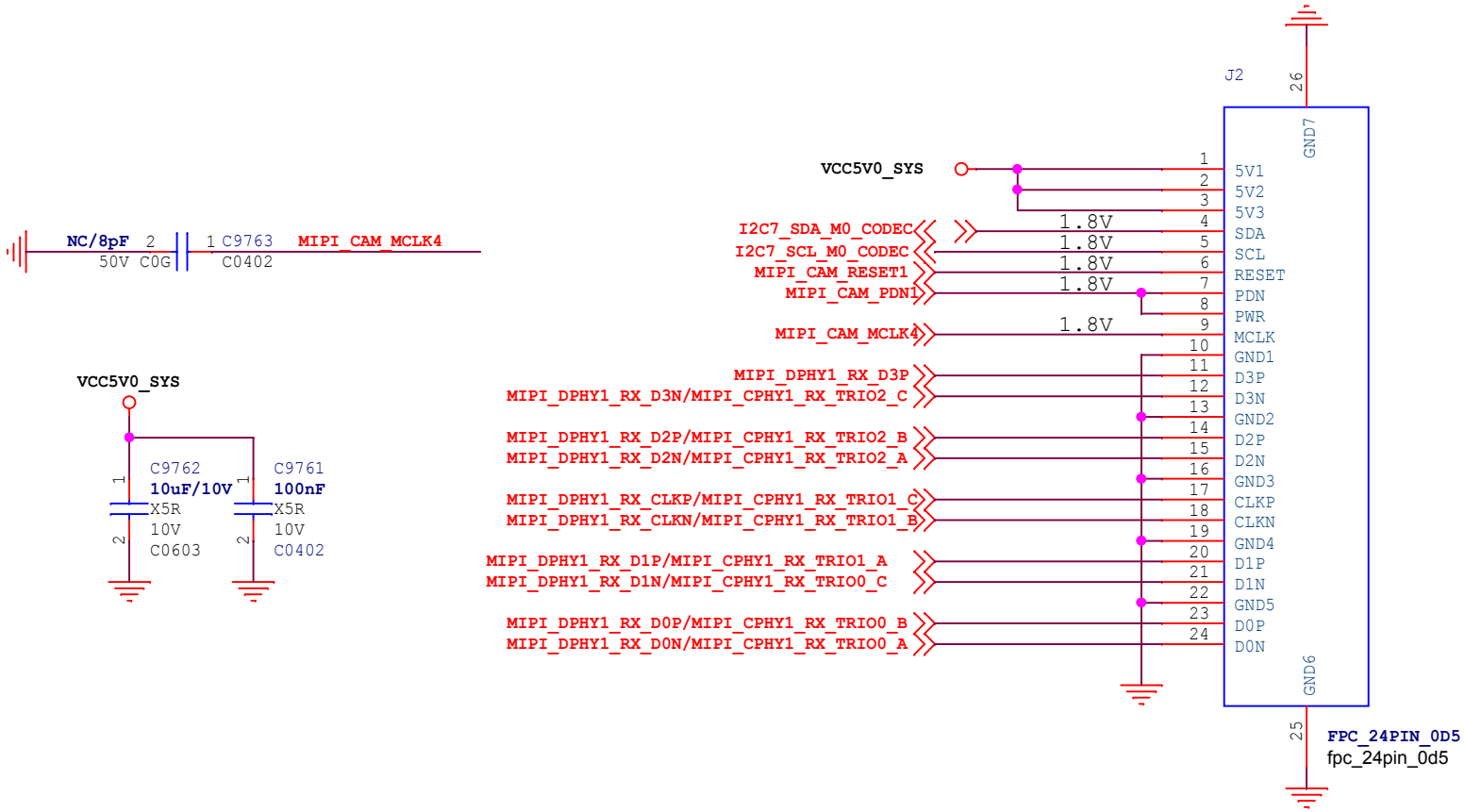

www.t-firefly.com

Project: Schematic Name	
File: MB-RK3588S-JD4	REV: V1.0
Create Date: Saturday, February 19, 2022	Page Num: 22
Modify Date: Thursday, September 01, 2022	Page Total: 31

MIPI-CSI_RX CON

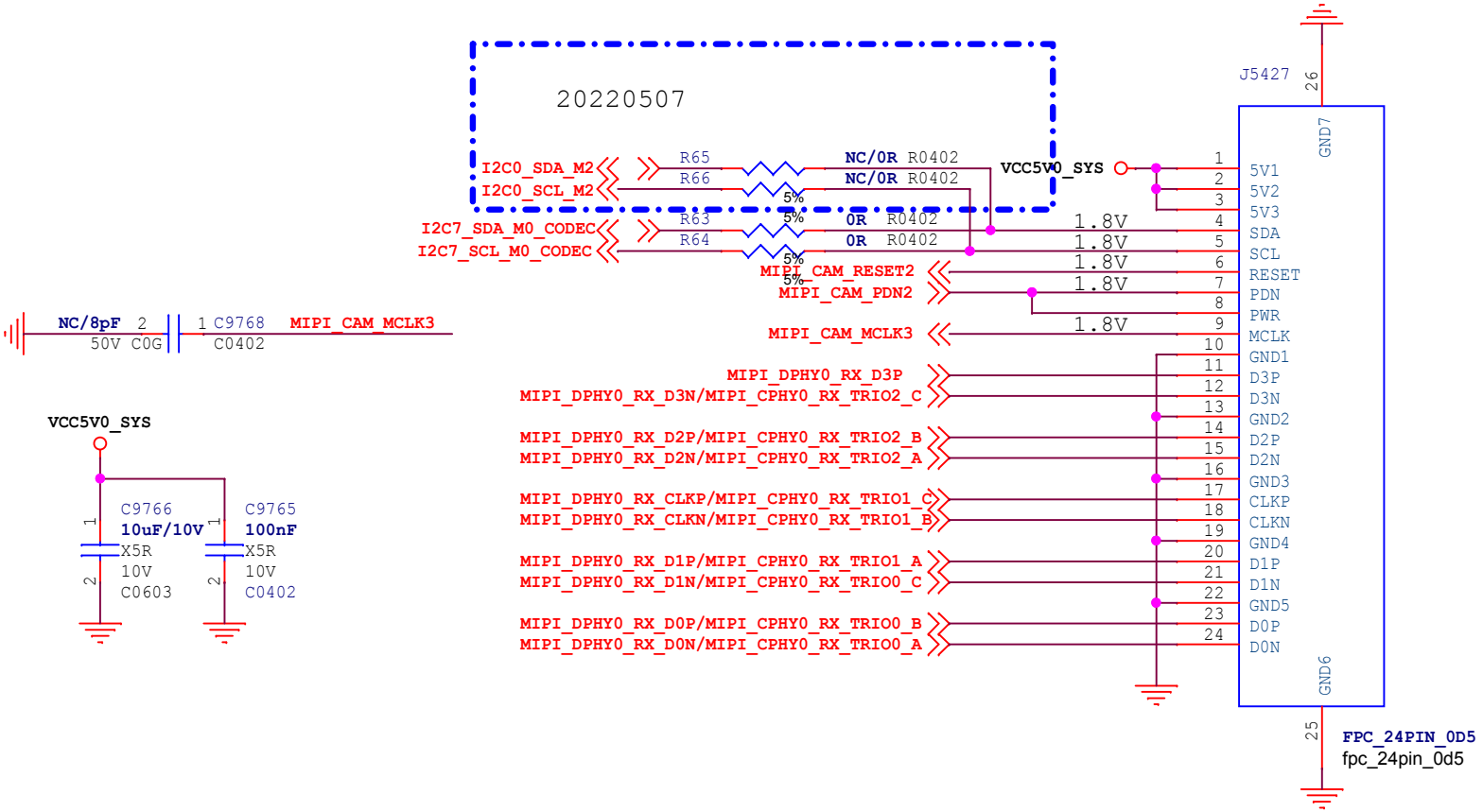

www.t-firefly.com

Project: Schematic Name	
File: MB-RK3588S-JD4	REV: V1.0
Create Date: Saturday, February 19, 2022	Page Num: 23
Modify Date: Saturday, September 03, 2022	Page Total: 31

MIPI-CSI_RX CON

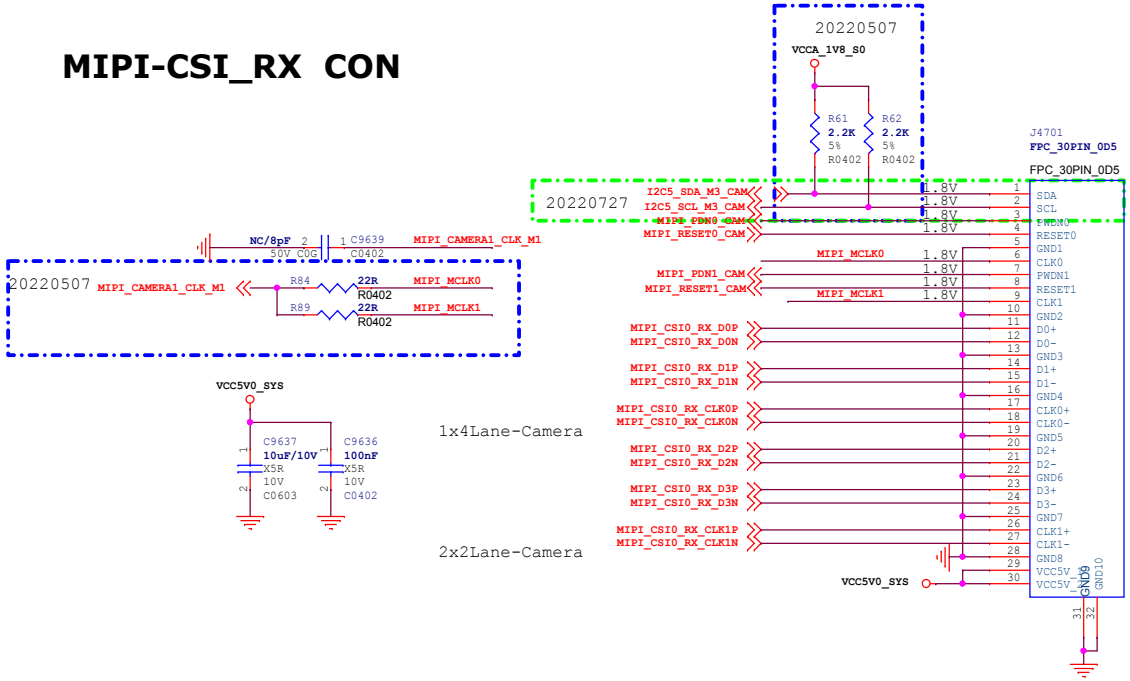

www.t-firefly.com

Project: Schematic Name	
File: MB-RK3588S-JD4	REV: V1.0
Create Date: Tuesday, April 06, 2021	Page Num: 24
Modify Date: Thursday, September 01, 2022	Page Total: 31

正负压

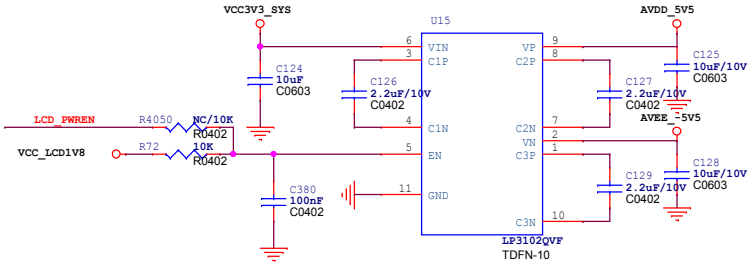

VDD

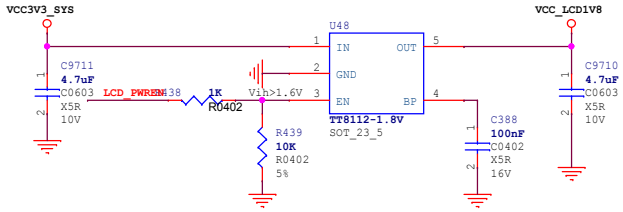

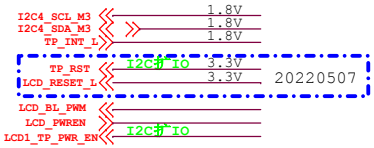

MIPI DSI0

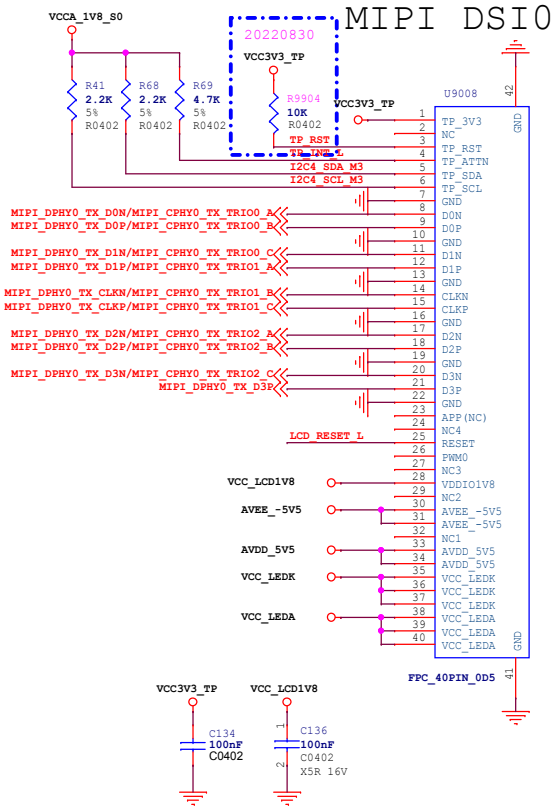

BL Power

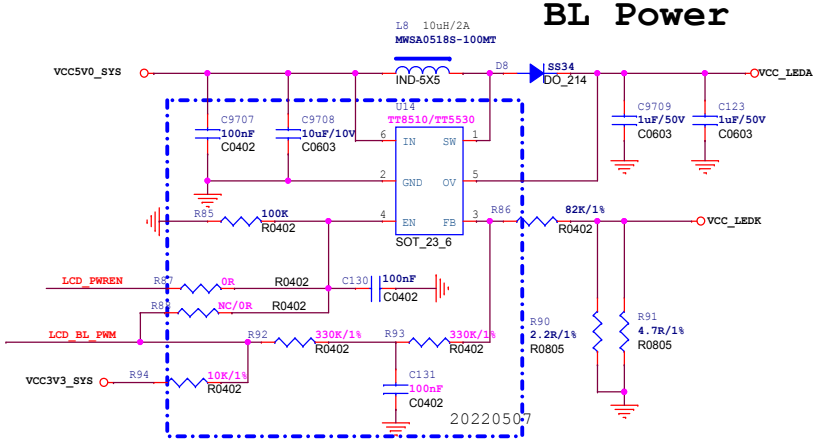

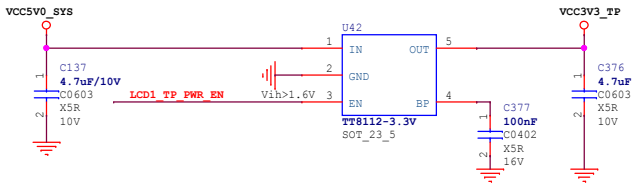

www.t-firefly.com

Project: Schematic Name	
File: MB-RK3588S-JD4	REV: V1.0
Create Date: Tuesday, April 06, 2021	Page Num: 25
Modify Date: Thursday, September 01, 2022	Page Total: 31

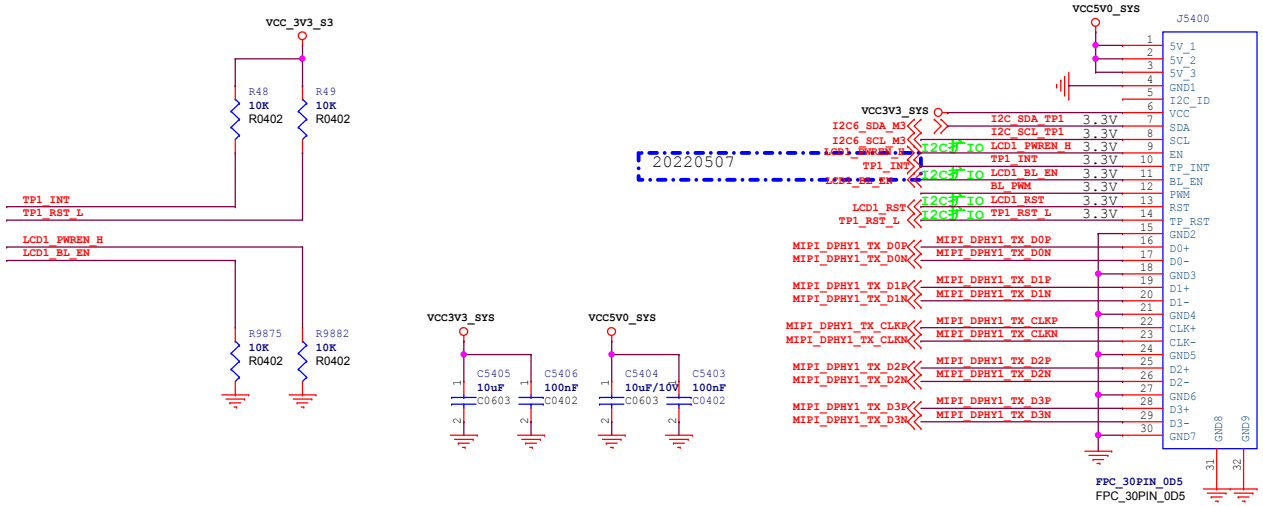

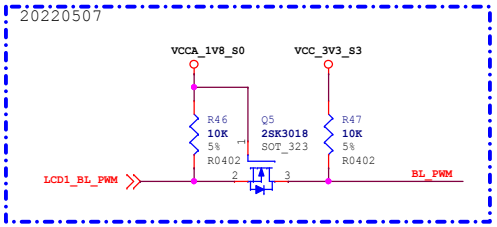

www.t-firefly.com

Project: Schematic Name	
File: MB-RK3588S-JD4	REV: V1.0
Create Date: Saturday, February 19, 2022	Page Num: 26
Modify Date: Thursday, September 01, 2022	Page Total: 31

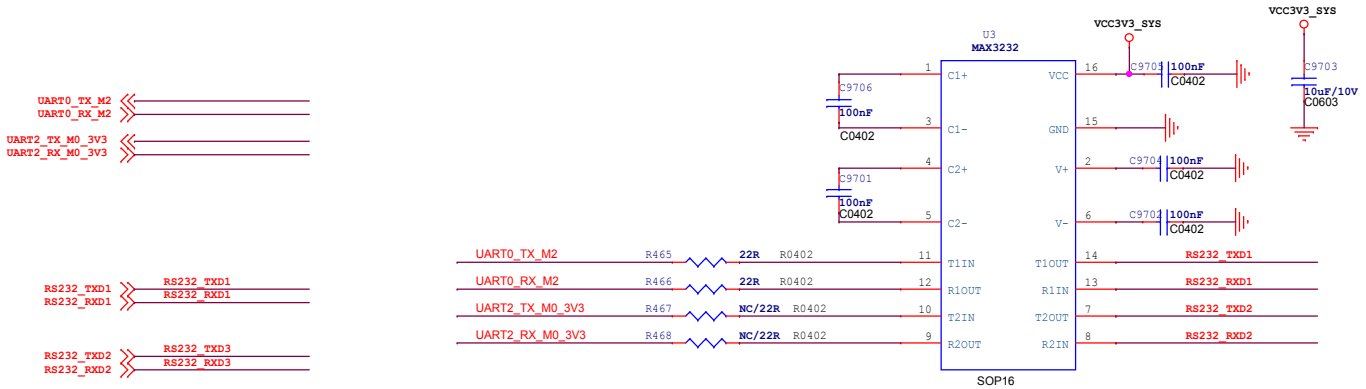

www.t-firefly.com

Project: Schematic Name	
File: MB-RK3588S-JD4	REV: V1.0
Create Date: Wednesday, February 16, 2022	Page Num: 27
Modify Date: Friday, September 02, 2022	Page Total: 31

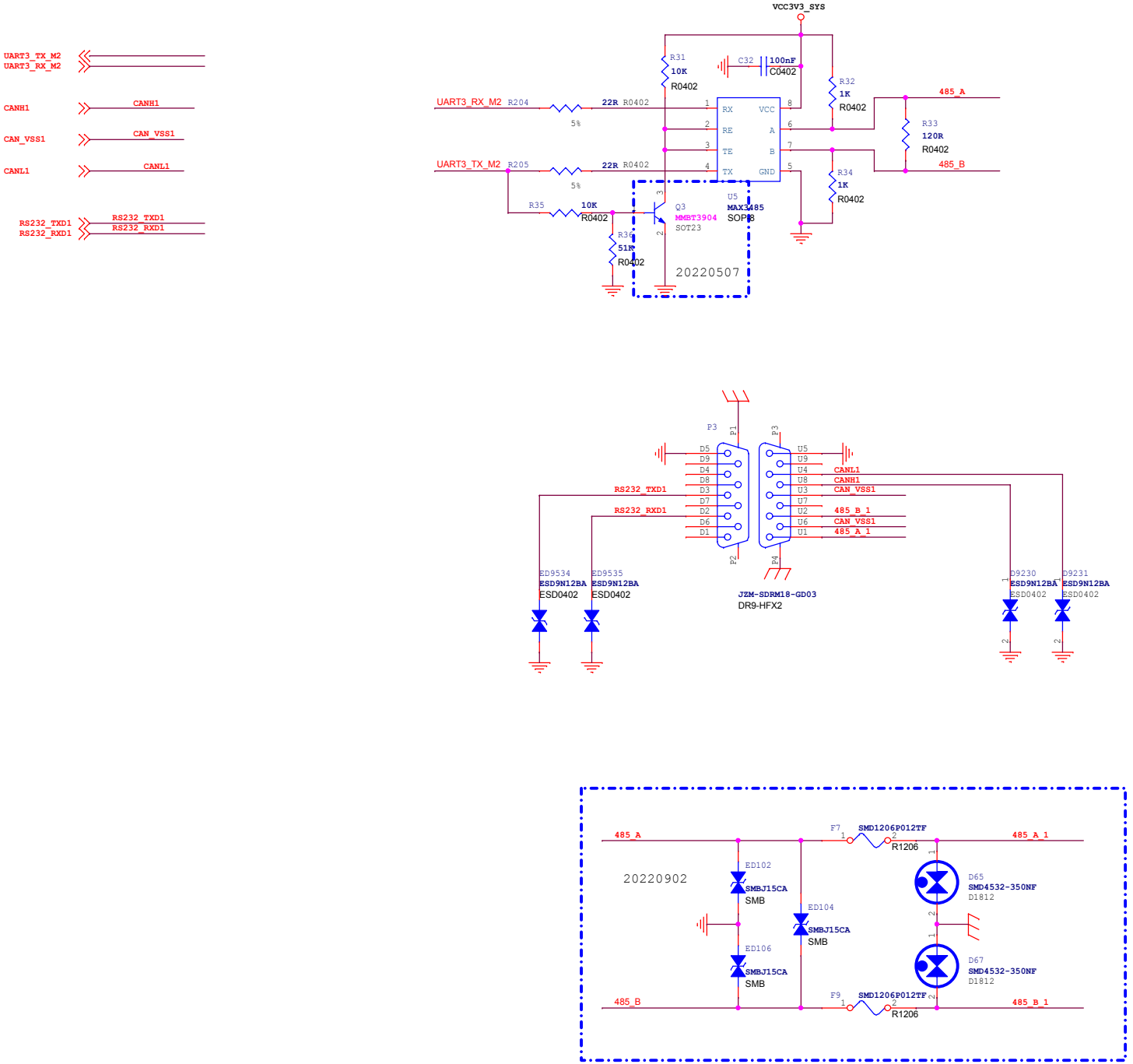

www.t-firefly.com

Project: Schematic Name	
File: MB-RK3588S-JD4	REV: V1.0
Create Date: Wednesday, February 16, 2022	Page Num: 28
Modify Date: Monday, September 05, 2022	Page Total: 31

CAN transceiver IC

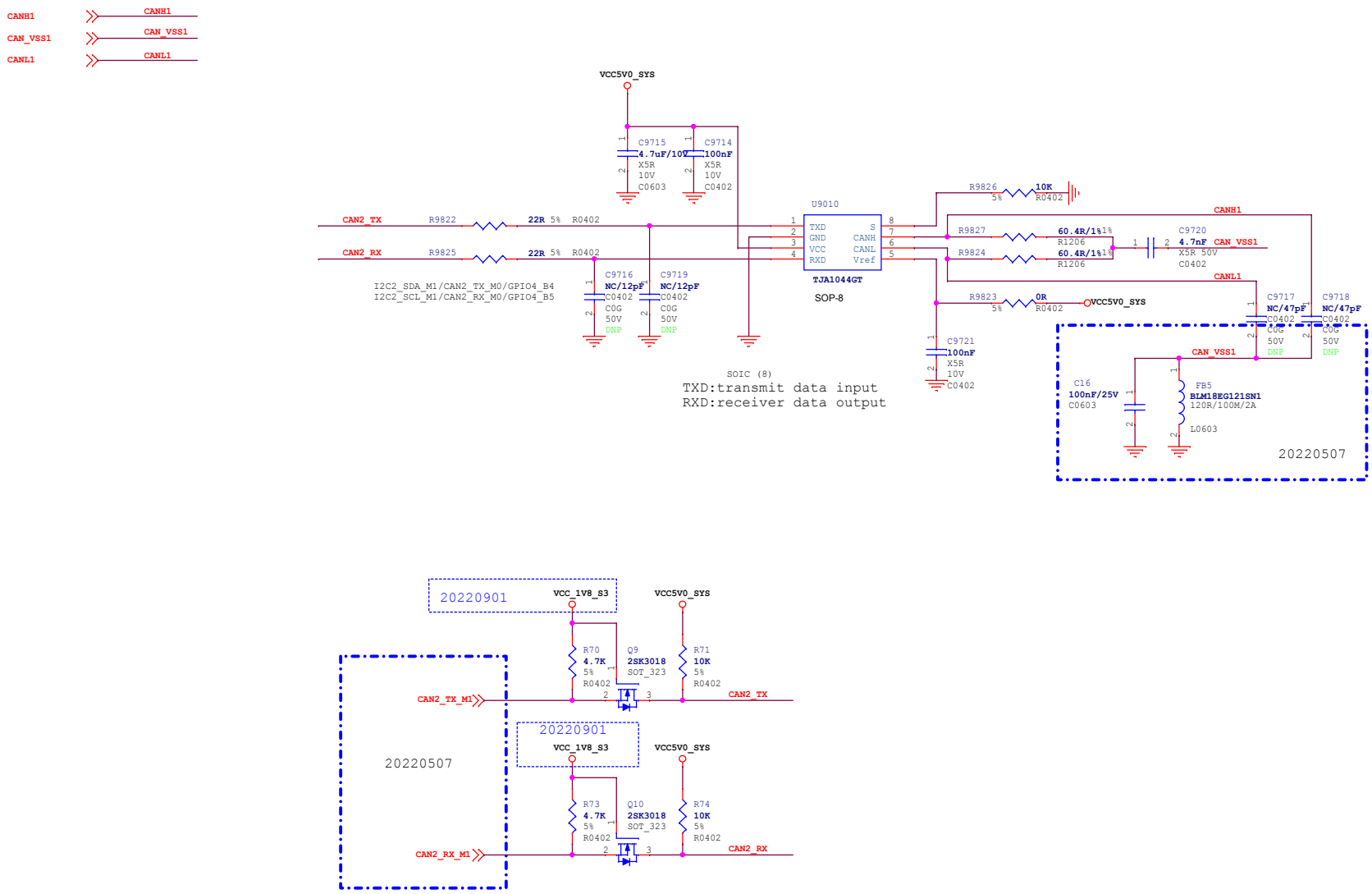

Project:	Schematic Name
File:	MB-RK3588S-JD4
REV:	V1.0
Create Date:	Wednesday, February 16, 2022
Page Num:	29
Modify Date:	Thursday, September 01, 2022
Page Total:	31

www.t-firefly.com

FAN

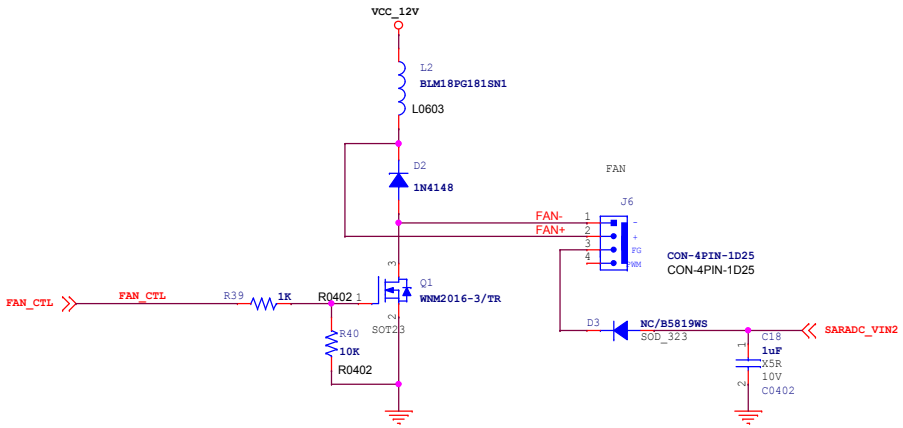

LED

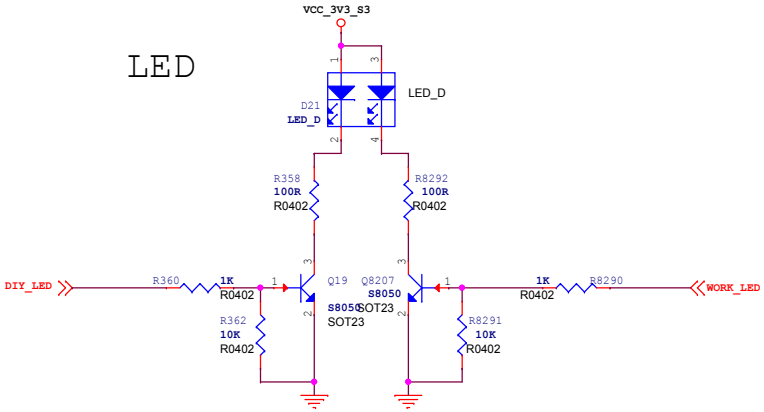

www.t-firefly.com

Project: Schematic Name	
File: MB-RK3588S-JD4	REV: V1.0
Create Date: Wednesday, February 09, 2022	Page Num: 30
Modify Date: Thursday, September 01, 2022	Page Total: 31

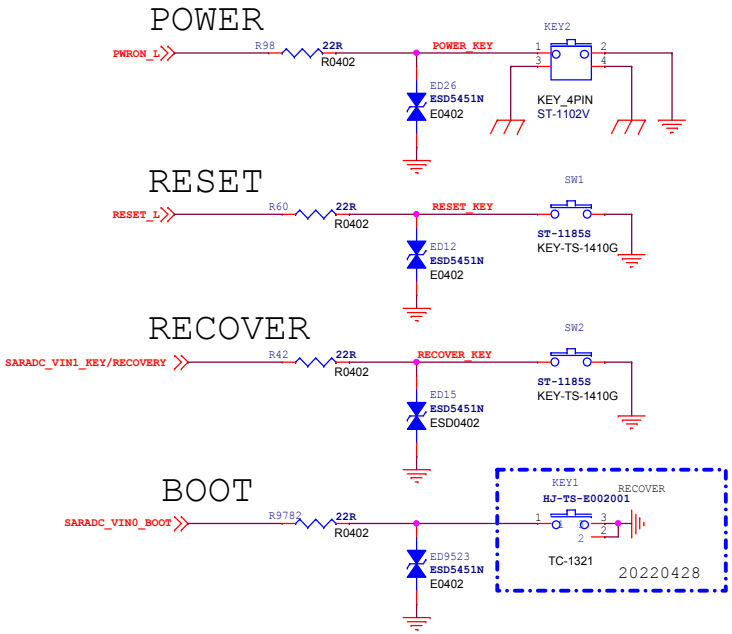

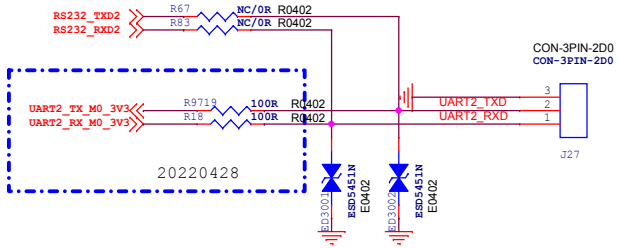

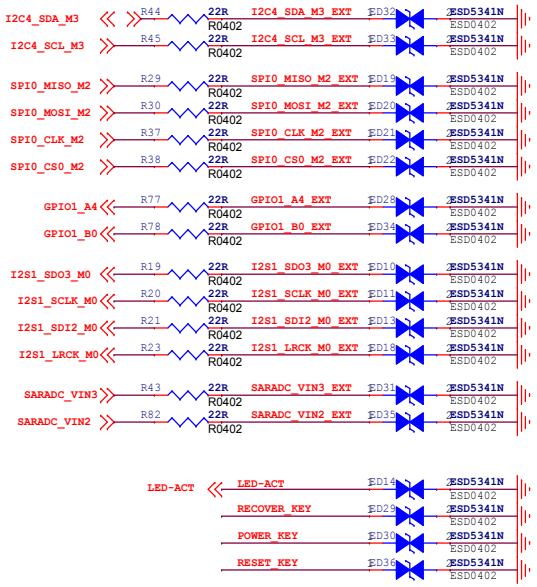

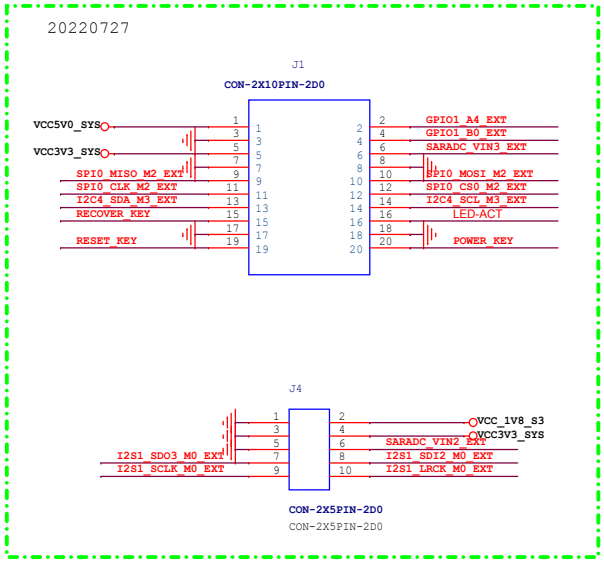

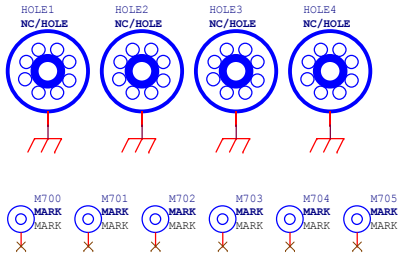

www.t-firefly.com

Project: Schematic Name	
File: MB-RK3588S-JD4	REV: V1.0
Create Date: Tuesday, April 06, 2021	Page Num: 31
Modify Date: Thursday, September 01, 2022	Page Total: 31