Page 2

LPC3154 Powering and Unused parts

Page 3

LPC3154 Digital I/O

Page 4

JTAG Interface

Page 5

LPC17XX

Page 6

LPC17XX Ethernet and I2C-E2PROM

Page 7

LPC17XX Expansion connector

Design Overview

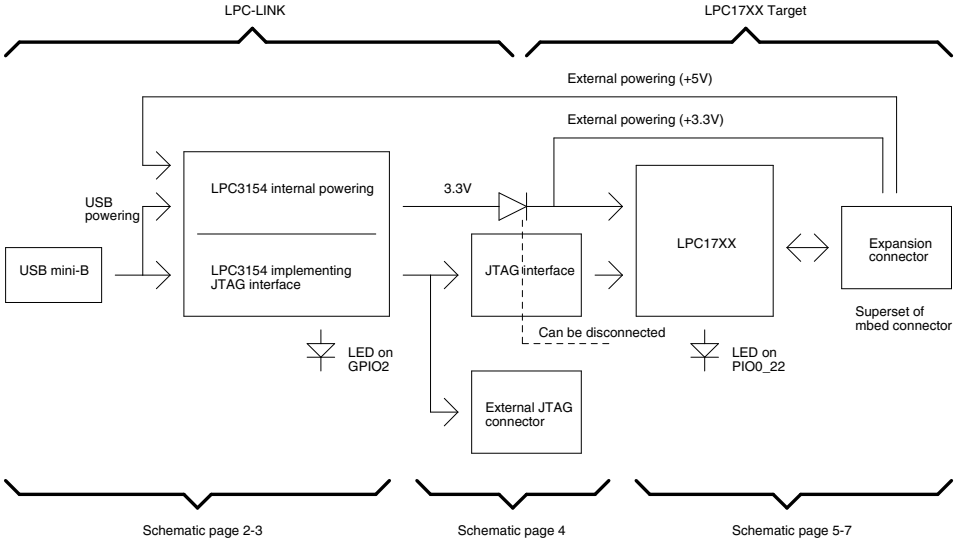

UL = UnLoaded = normally not mounted component.

Default jumper settings are indicated in the schematic.
However, always check jumper positions on actual boards
since there is no guarantee that all jumpers are in default place.

(C) Embedded Artists AB

TITLE: LPCXpresso LPC1769 rev B	
Document Number:	
Date: 2011-02-11 07:09:51	Sheet: 1/7

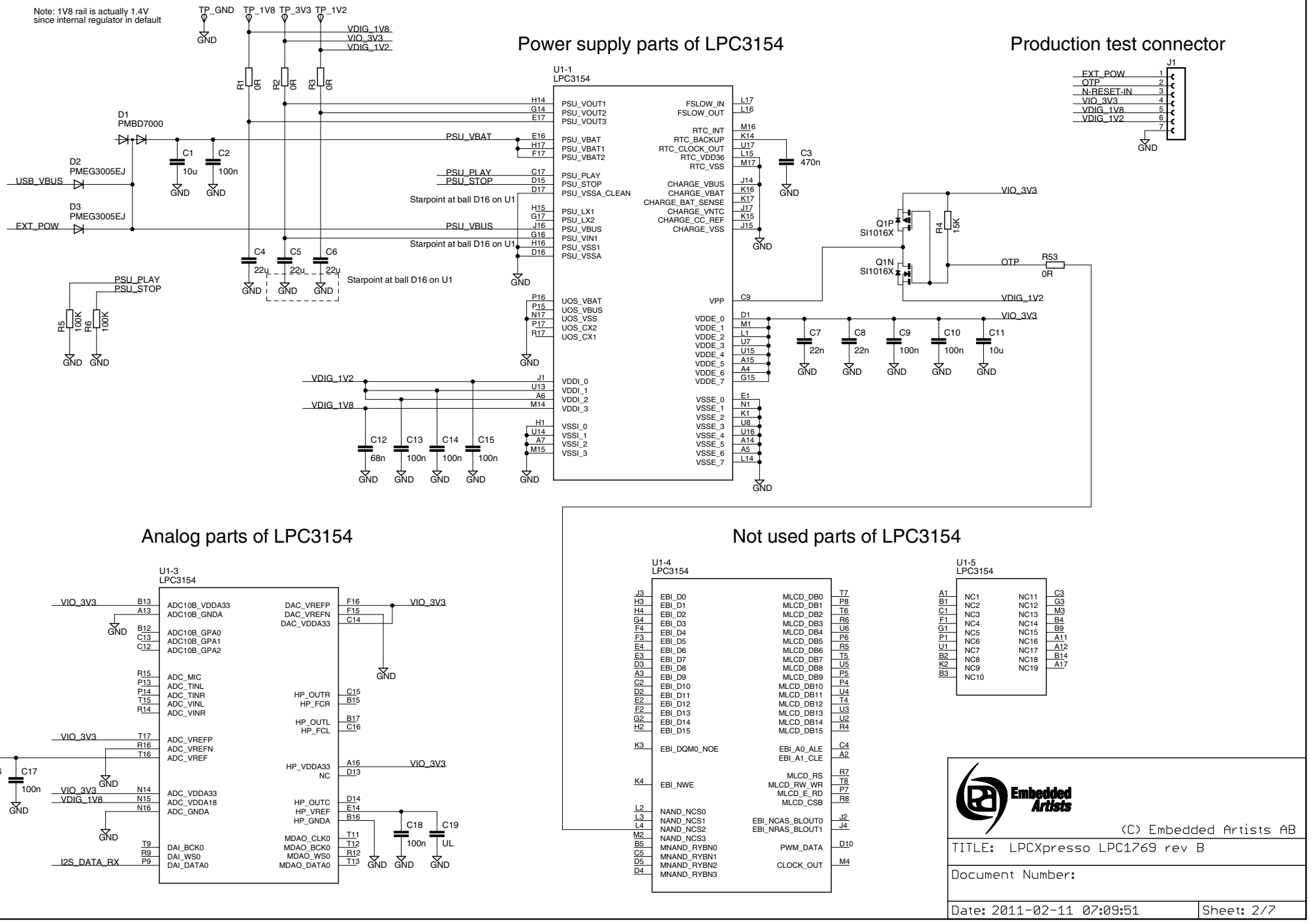
Note: 1V8 rail is actually 1.4V since internal regulator in default
Power supply parts of LPC3154
Production test connector
Analog parts of LPC3154
Not used parts of LPC3154
U1-1 LPC3154
U1-3 LPC3154
U1-4 LPC3154
U1-5 LPC3154
TP_GND
TP_1V8
TP_3V3
TP_1V2
VDIG_1V8
VIO_3V3
VDIG_1V2
R1 0R
R2 0R
R3 0R
D1 PMBD7000
D2 PMEG3005EJ
D3 PMEG3005EJ
USB_VBUS
EXT_POW
PSU_VBAT
PSU_PLAY
PSU_STOP
PSU_VBUS
Starpoint at ball D16 on U1
C1 10u
C2 100n
C3 470n
C4 22u
C5 22u
C6 22u
R5 100K
R6 100K
Q1P SI1016X
Q1N SI1016X
R4 15K
OTP
R53 0R
C7 22n
C8 22n
C9 100n
C10 100n
C11 10u
C12 68n
C13 100n
C14 100n
C15 100n
C16 UL
C17 100n
C18 100n
C19 UL
I2S_DATA_RX
GND
J1
EXT_POW
OTP
N-RESET-IN
VIO_3V3
VDIG_1V8
VDIG_1V2
PSU_VOUT1
PSU_VOUT2
PSU_VOUT3
PSU_VBAT
PSU_VBAT1
PSU_VBAT2
PSU_PLAY
PSU_STOP
PSU_VSSA_CLEAN
PSU_LX1
PSU_LX2
PSU_VBUS
PSU_VIN1
PSU_VSS1
PSU_VSSA
UOS_VBAT
UOS_VBUS
UOS_VSS
UOS_CX2
UOS_CX1
VDDI_0
VDDI_1
VDDI_2
VDDI_3
VSSI_0
VSSI_1
VSSI_2
VSSI_3
FSLOW_IN
FSLOW_OUT
RTC_INT
RTC_BACKUP
RTC_CLOCK_OUT
RTC_VDD36
RTC_VSS
CHARGE_VBUS
CHARGE_VBAT
CHARGE_BAT_SENSE
CHARGE_VNTC
CHARGE_CC_REF
CHARGE_VSS
VPP
VDDE_0
VDDE_1
VDDE_2
VDDE_3
VDDE_4
VDDE_5
VDDE_6
VDDE_7
VSSE_0
VSSE_1
VSSE_2
VSSE_3
VSSE_4
VSSE_5
VSSE_6
VSSE_7
ADC10B_VDDA33
ADC10B_GNDA
ADC10B_GPA0
ADC10B_GPA1
ADC10B_GPA2
ADC_MIC
ADC_TINL
ADC_TINR
ADC_VINL
ADC_VINR
ADC_VREFP
ADC_VREFN
ADC_VREF
ADC_VDDA33
ADC_VDDA18
ADC_GNDA
DAI_BCK0
DAI_WS0
DAI_DATA0
DAC_VREFP
DAC_VREFN
DAC_VDDA33
HP_OUTR
HP_FCR
HP_OUTL
HP_FCL
HP_VDDA33
NC
HP_OUTC
HP_VREF
HP_GNDA
MDAO_CLK0
MDAO_BCK0
MDAO_WS0
MDAO_DATA0
EBI_D0
EBI_D1
EBI_D2
EBI_D3
EBI_D4
EBI_D5
EBI_D6
EBI_D7
EBI_D8
EBI_D9
EBI_D10
EBI_D11
EBI_D12
EBI_D13
EBI_D14
EBI_D15
EBI_DQM0_NOE
EBI_NWE
NAND_NCS0
NAND_NCS1
NAND_NCS2
NAND_NCS3
MNAND_RYBN0
MNAND_RYBN1
MNAND_RYBN2
MNAND_RYBN3
MLCD_DB0
MLCD_DB1
MLCD_DB2
MLCD_DB3
MLCD_DB4
MLCD_DB5
MLCD_DB6
MLCD_DB7
MLCD_DB8
MLCD_DB9
MLCD_DB10
MLCD_DB11
MLCD_DB12
MLCD_DB13
MLCD_DB14
MLCD_DB15
EBI_A0_ALE
EBI_A1_CLE
MLCD_RS
MLCD_RW_WR
MLCD_E_RD
MLCD_CSB
EBI_NCAS_BLOUT0
EBI_NRAS_BLOUT1
PWM_DATA
CLOCK_OUT
NC1
NC2
NC3
NC4
NC5
NC6
NC7
NC8
NC9
NC10
NC11
NC12
NC13
NC14
NC15
NC16
NC17
NC18
NC19
Embedded Artists
(C) Embedded Artists AB
TITLE: LPCXpresso LPC1769 rev B
Document Number:
Date: 2011-02-11 07:09:51
Sheet: 2/7

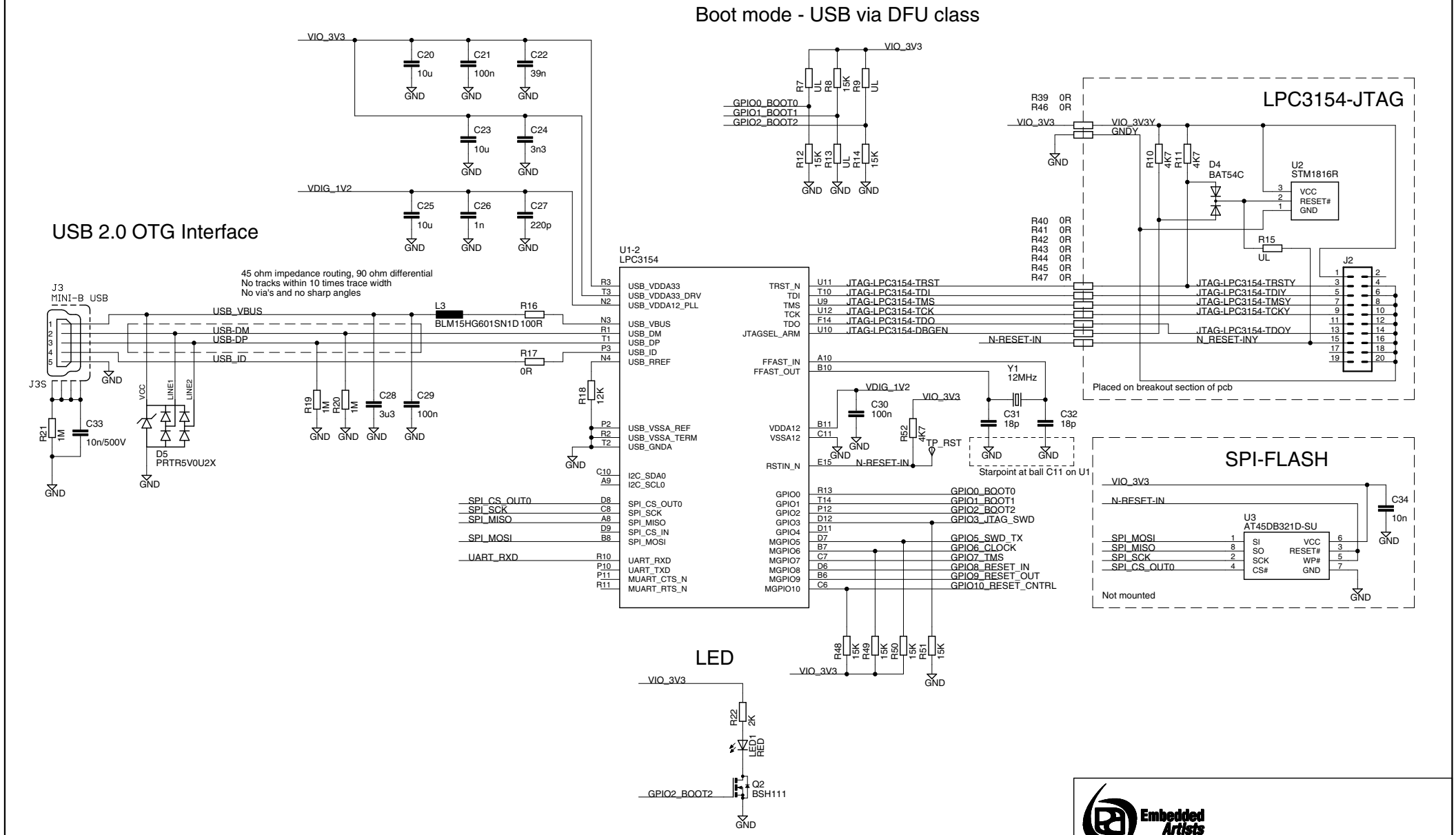

(C) Embedded Artists AB

TITLE: LPCXpresso LPC1769 rev B

Document Number:

Date: 2011-02-11 07:09:51

Sheet: 3/7

SWD/JTAG Interface

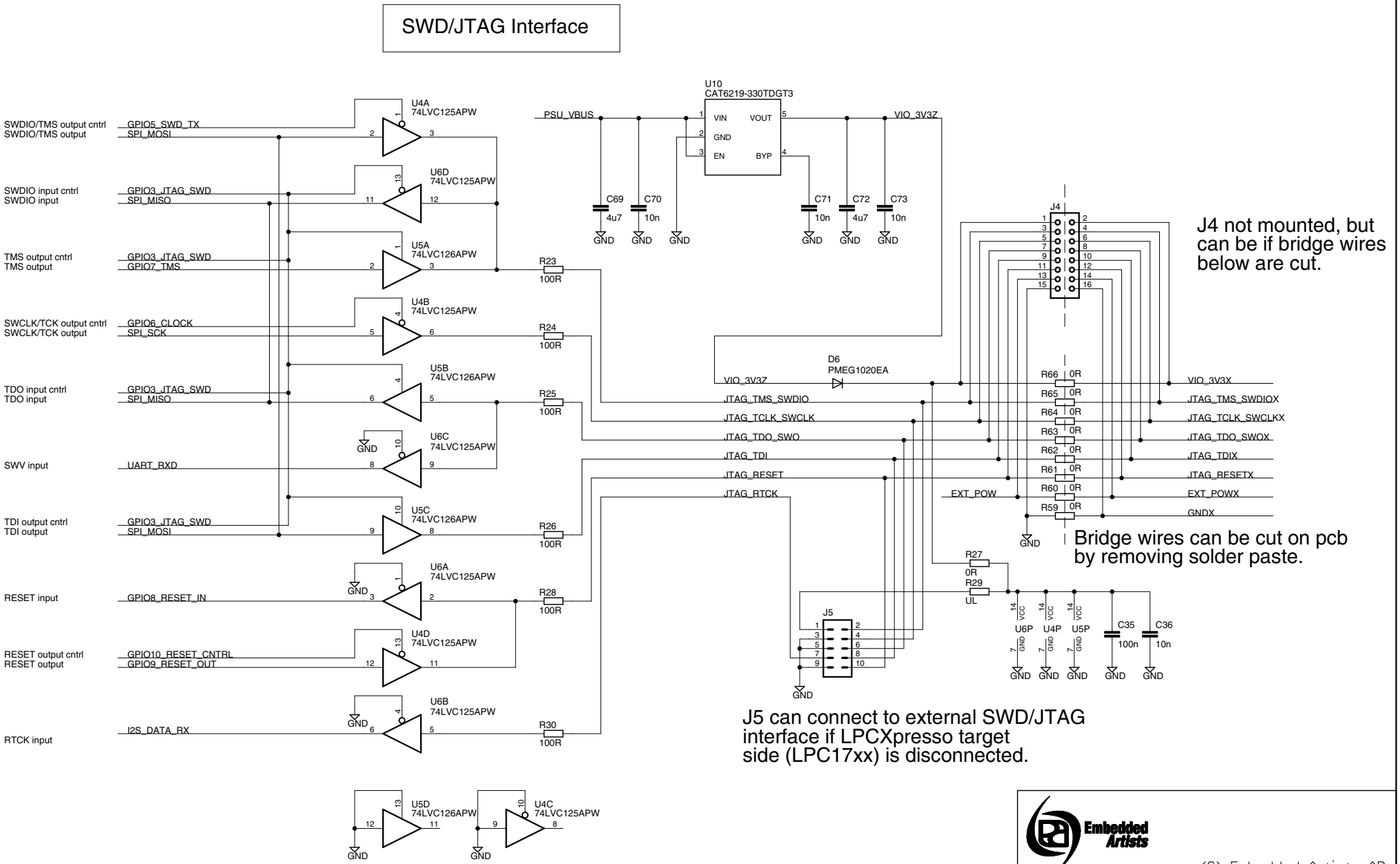

(C) Embedded Artists AB

TITLE: LPCXpresso LPC1769 rev B	
Document Number:	
Date: 2011-02-11 07:09:51	Sheet: 4/7

From LPC-LINK Side

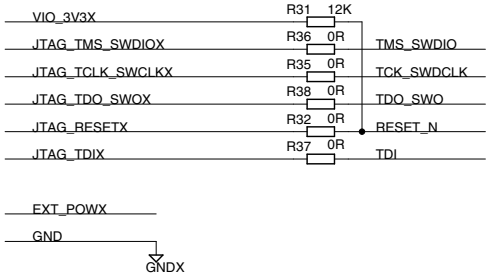

LPC176X Target Side

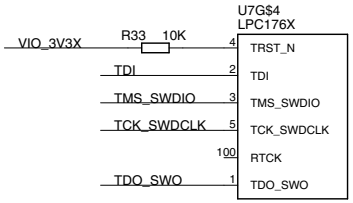

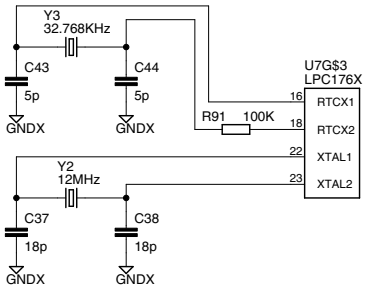

J7 normally shorted. Can be used for current consumption measurements on U7.

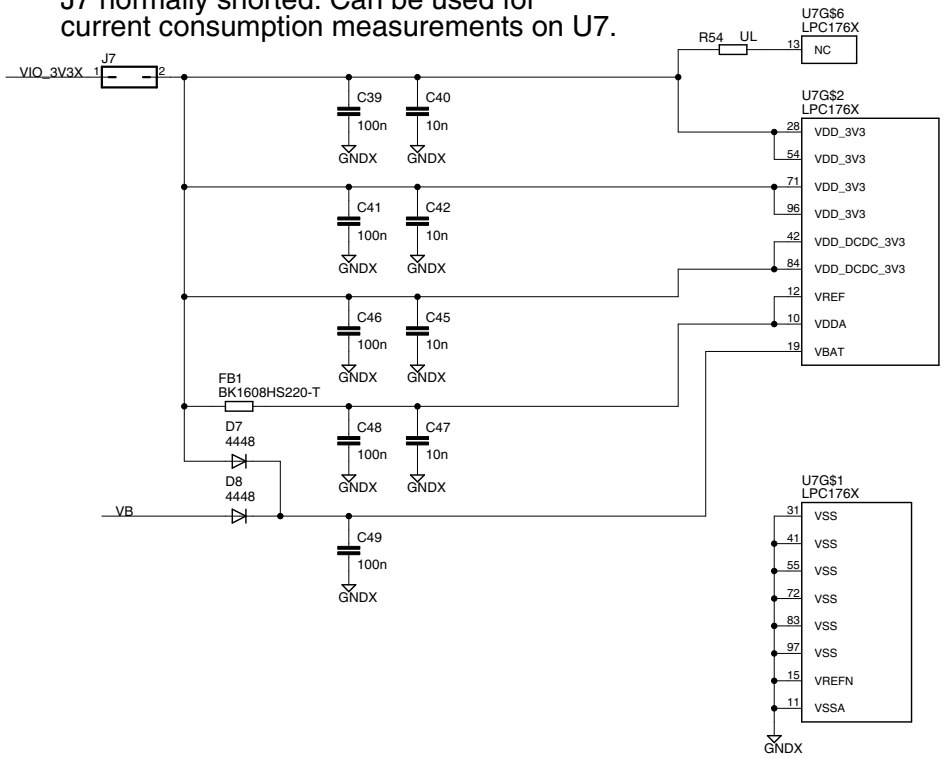

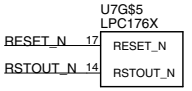

LED

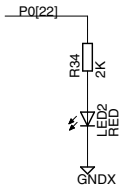

(C) Embedded Artists AB

TITLE: LPCXpresso LPC1769 rev B

Document Number:

Date: 2011-02-11 07:09:51 | Sheet: 5/7

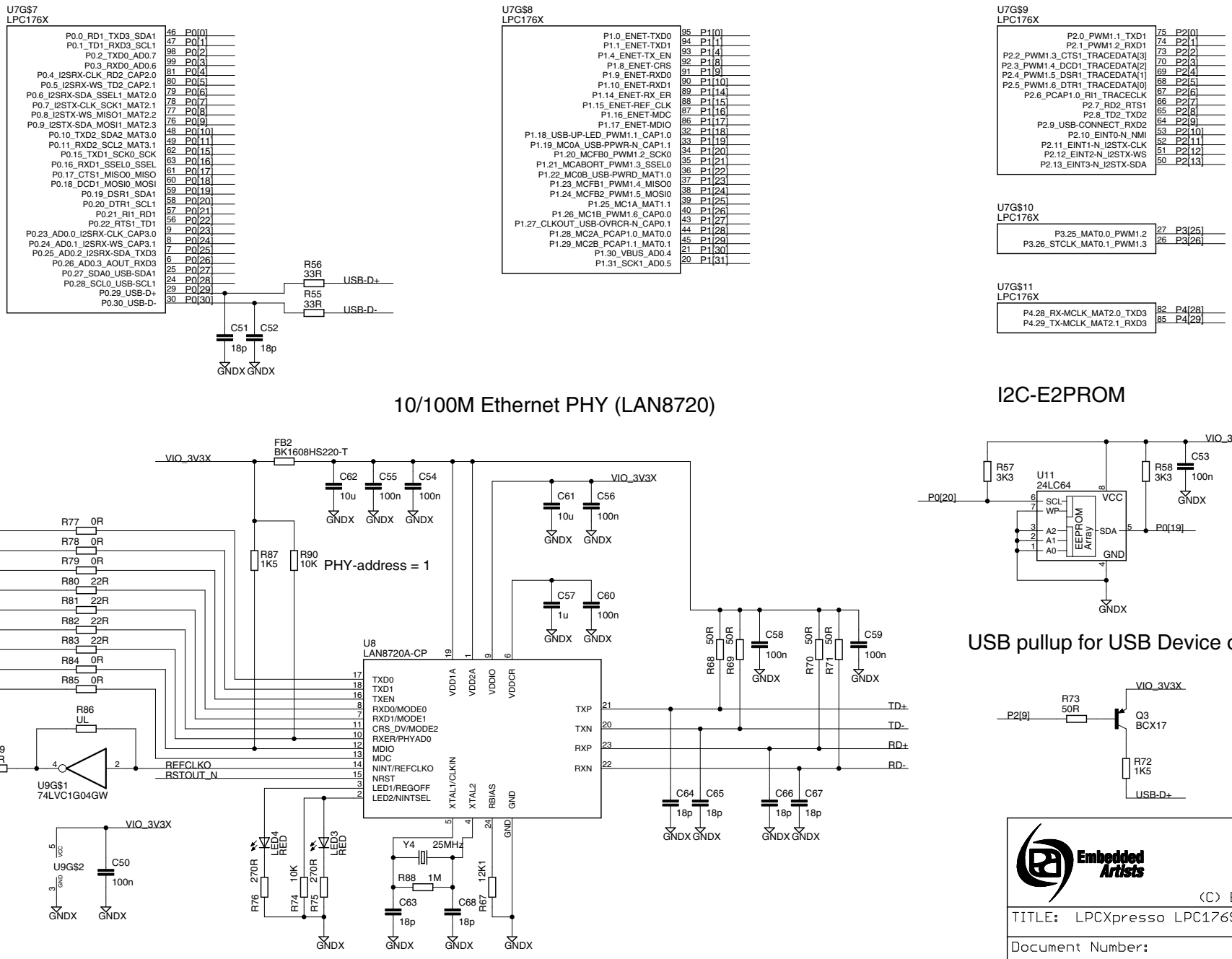
U7G$7
LPC176X
P0.0_RD1_TXD3_SDA1
P0.1_TD1_RXD3_SCL1
P0.2_TXD0_AD0.7
P0.3_RXD0_AD0.6
P0.4_I2SRX-CLK_RD2_CAP2.0
P0.5_I2SRX-WS_TD2_CAP2.1
P0.6_I2SRX-SDA_SSEL1_MAT2.0
P0.7_I2STX-CLK_SCK1_MAT2.1
P0.8_I2STX-WS_MISO1_MAT2.2
P0.9_I2STX-SDA_MOSI1_MAT2.3
P0.10_TXD2_SDA2_MAT3.0
P0.11_RXD2_SCL2_MAT3.1
P0.15_TXD1_SCK0_SCK
P0.16_RXD1_SSEL0_SSEL
P0.17_CTS1_MISO0_MISO
P0.18_DCD1_MOSI0_MOSI
P0.19_DSR1_SDA1
P0.20_DTR1_SCL1
P0.21_RI1_RD1
P0.22_RTS1_TD1
P0.23_AD0.0_I2SRX-CLK_CAP3.0
P0.24_AD0.1_I2SRX-WS_CAP3.1
P0.25_AD0.2_I2SRX-SDA_TXD3
P0.26_AD0.3_AOUT_RXD3
P0.27_SDA0_USB-SDA1
P0.28_SCL0_USB-SCL1
P0.29_USB-D+
P0.30_USB-D-
46 P0[0]
47 P0[1]
98 P0[2]
99 P0[3]
81 P0[4]
80 P0[5]
79 P0[6]
78 P0[7]
77 P0[8]
76 P0[9]
48 P0[10]
49 P0[11]
62 P0[15]
63 P0[16]
61 P0[17]
60 P0[18]
59 P0[19]
58 P0[20]
57 P0[21]
56 P0[22]
9 P0[23]
8 P0[24]
7 P0[25]
6 P0[26]
25 P0[27]
24 P0[28]
29 P0[29]
30 P0[30]
R56
33R
USB-D+
R55
33R
USB-D-
C51
18p
C52
18p
GNDX GNDX
U7G$8
LPC176X
P1.0_ENET-TXD0
P1.1_ENET-TXD1
P1.4_ENET-TX_EN
P1.8_ENET-CRS
P1.9_ENET-RXD0
P1.10_ENET-RXD1
P1.14_ENET-RX_ER
P1.15_ENET-REF_CLK
P1.16_ENET-MDC
P1.17_ENET-MDIO
P1.18_USB-UP-LED_PWM1.1_CAP1.0
P1.19_MC0A_USB-PPWR-N_CAP1.1
P1.20_MCFB0_PWM1.2_SCK0
P1.21_MCABORT_PWM1.3_SSEL0
P1.22_MC0B_USB-PWRD_MAT1.0
P1.23_MCFB1_PWM1.4_MISO0
P1.24_MCFB2_PWM1.5_MOSI0
P1.25_MC1A_MAT1.1
P1.26_MC1B_PWM1.6_CAP0.0
P1.27_CLKOUT_USB-OVRCR-N_CAP0.1
P1.28_MC2A_PCAP1.0_MAT0.0
P1.29_MC2B_PCAP1.1_MAT0.1
P1.30_VBUS_AD0.4
P1.31_SCK1_AD0.5
95 P1[0]
94 P1[1]
93 P1[4]
92 P1[8]
91 P1[9]
90 P1[10]
89 P1[14]
88 P1[15]
87 P1[16]
86 P1[17]
92 P1[18]
93 P1[19]
94 P1[20]
95 P1[21]
96 P1[22]
97 P1[23]
98 P1[24]
99 P1[25]
40 P1[26]
43 P1[27]
44 P1[28]
45 P1[29]
21 P1[30]
20 P1[31]
U7G$9
LPC176X
P2.0_PWM1.1_TXD1
P2.1_PWM1.2_RXD1
P2.2_PWM1.3_CTS1_TRACEDATA[3]
P2.3_PWM1.4_DCD1_TRACEDATA[2]
P2.4_PWM1.5_DSR1_TRACEDATA[1]
P2.5_PWM1.6_DTR1_TRACEDATA[0]
P2.6_PCAP1.0_RI1_TRACECLK
P2.7_RD2_RTS1
P2.8_TD2_TXD2
P2.9_USB-CONNECT_RXD2
P2.10_EINT0-N_NMI
P2.11_EINT1-N_I2STX-CLK
P2.12_EINT2-N_I2STX-WS
P2.13_EINT3-N_I2STX-SDA
75 P2[0]
74 P2[1]
73 P2[2]
70 P2[3]
69 P2[4]
68 P2[5]
67 P2[6]
66 P2[7]
65 P2[8]
64 P2[9]
53 P2[10]
52 P2[11]
51 P2[12]
50 P2[13]
U7G$10
LPC176X
P3.25_MAT0.0_PWM1.2
P3.26_STCLK_MAT0.1_PWM1.3
27 P3[25]
26 P3[26]
U7G$11
LPC176X
P4.28_RX-MCLK_MAT2.0_TXD3
P4.29_TX-MCLK_MAT2.1_RXD3
82 P4[28]
85 P4[29]
10/100M Ethernet PHY (LAN8720)
FB2
BK1608HS220-T
VIO_3V3X
C62
10u
C55
100n
C54
100n
GNDX GNDX GNDX
C61
10u
C56
100n
GNDX GNDX
C57
1u
C60
100n
GNDX GNDX
R87
1K5
R90
10K
PHY-address = 1
P1[0] R77 0R
P1[1] R78 0R
P1[4] R79 0R
P1[9] R80 22R
P1[10] R81 22R
P1[8] R82 22R
P1[14] R83 22R
P1[17] R84 0R
P1[16] R85 0R
R86
UL
P1[15]
R89
22R
U9G$1
74LVC1G04GW
REFCLKO
RSTOUT_N
U8
LAN8720A-CP
TXD0
TXD1
TXEN
RXD0/MODE0
RXD1/MODE1
CRS_DV/MODE2
RXER/PHYAD0
MDIO
MDC
NINT/REFCLKO
NRST
LED1/REGOFF
LED2/NINTSEL
VDD1A
VDD2A
VDDIO
VDDCR
TXP
TXN
RXP
RXN
XTAL1/CLKIN
XTAL2
RBIAS
GND
TD+
TD-
RD+
RD-
R68 50R
R69 50R
C58
100n
GNDX
R70 50R
R71 50R
C59
100n
GNDX
C64 C65
18p 18p
GNDX GNDX
C66 C67
18p 18p
GNDX GNDX
VIO_3V3X
U9G$2
C50
100n
GNDX GNDX
LED4
RED
LED3
RED
R76 270R
R74 10K
R75 270R
GNDX
Y4 25MHz
R88 1M
C63
18p
C68
18p
GNDX GNDX
R67
12K1
GNDX
I2C-E2PROM
VIO_3V3X
R57
3K3
U11
24LC64
R58
3K3
C53
100n
GNDX
P0[20]
SCL
WP
VCC
A2
A1
A0
SDA
GND
EEPROM
Array
P0[19]
GNDX
USB pullup for USB Device operation
VIO_3V3X
R73
50R
P2[9]
Q3
BCX17
R72
1K5
USB-D+
(C) Embedded Artists AB
TITLE: LPCXpresso LPC1769 rev B
Document Number:
Date: 2011-02-11 07:09:51
Sheet: 6/7

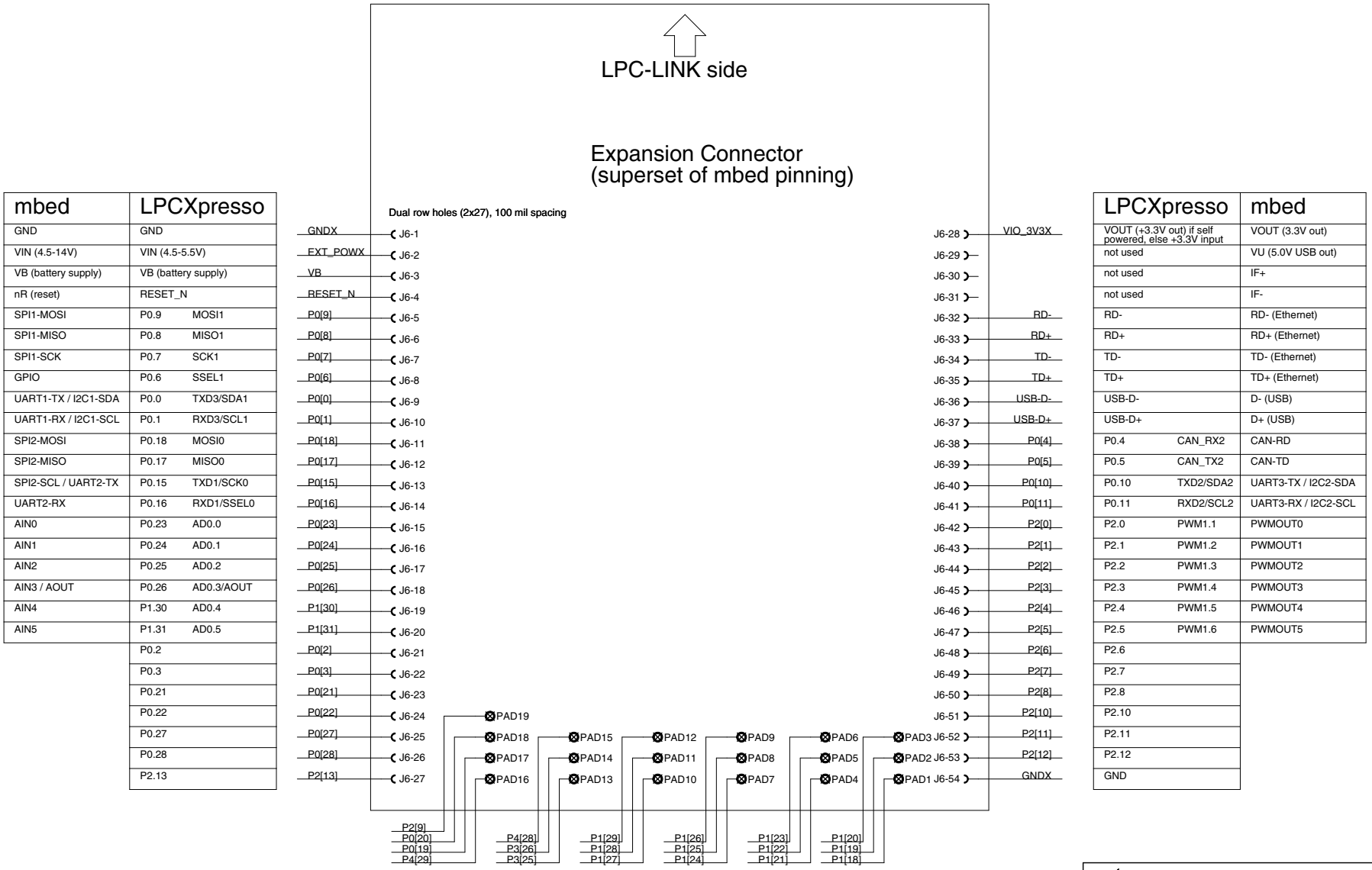

mbed	LPCXpresso	
GND	GND	
VIN (4.5-14V)	VIN (4.5-5.5V)	
VB (battery supply)	VB (battery supply)	
nR (reset)	RESET_N	
SPI1-MOSI	P0.9	MOSI1
SPI1-MISO	P0.8	MISO1
SPI1-SCK	P0.7	SCK1
GPIO	P0.6	SSEL1
UART1-TX / I2C1-SDA	P0.0	TXD3/SDA1
UART1-RX / I2C1-SCL	P0.1	RXD3/SCL1
SPI2-MOSI	P0.18	MOSI0
SPI2-MISO	P0.17	MISO0
SPI2-SCL / UART2-TX	P0.15	TXD1/SCK0
UART2-RX	P0.16	RXD1/SSEL0
AIN0	P0.23	AD0.0
AIN1	P0.24	AD0.1
AIN2	P0.25	AD0.2
AIN3 / AOUT	P0.26	AD0.3/AOUT
AIN4	P1.30	AD0.4
AIN5	P1.31	AD0.5
	P0.2	
	P0.3	
	P0.21	
	P0.22	
	P0.27	
	P0.28	
	P2.13	

LPCXpresso		mbed
VOUT (+3.3V out) if self powered, else +3.3V input		VOUT (3.3V out)
not used		VU (5.0V USB out)
not used		IF+
not used		IF-
RD-		RD- (Ethernet)
RD+		RD+ (Ethernet)
TD-		TD- (Ethernet)
TD+		TD+ (Ethernet)
USB-D-		D- (USB)
USB-D+		D+ (USB)
P0.4	CAN_RX2	CAN-RD
P0.5	CAN_TX2	CAN-TD
P0.10	TXD2/SDA2	UART3-TX / I2C2-SDA
P0.11	RXD2/SCL2	UART3-RX / I2C2-SCL
P2.0	PWM1.1	PWMOUT0
P2.1	PWM1.2	PWMOUT1
P2.2	PWM1.3	PWMOUT2
P2.3	PWM1.4	PWMOUT3
P2.4	PWM1.5	PWMOUT4
P2.5	PWM1.6	PWMOUT5
P2.6		
P2.7		
P2.8		
P2.10		
P2.11		
P2.12		
GND		

(C) Embedded Artists AB

TITLE: LPCXpresso LPC1769 rev B

Document Number:

Date: 2011-02-11 07:09:51 Sheet: 7/7