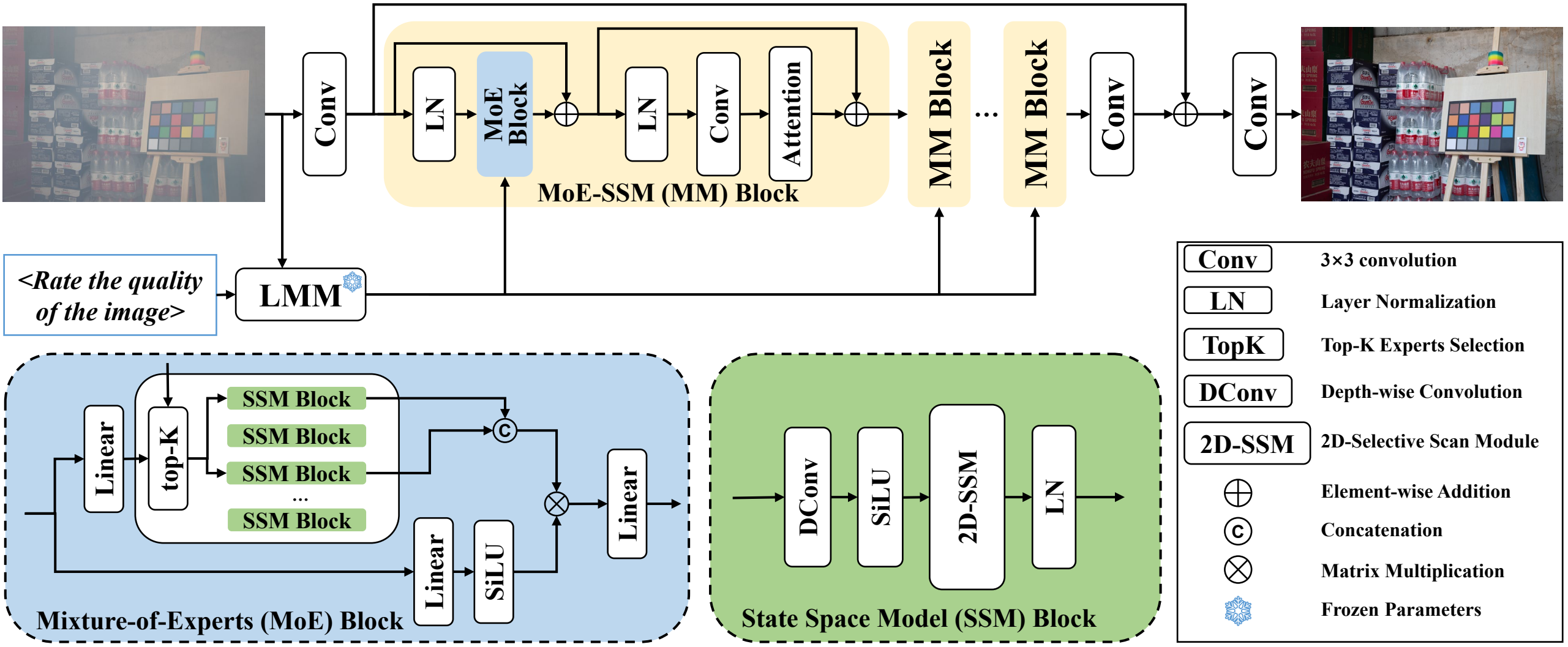
Conv
LN
MoE Block
LN
Conv
Attention
MoE-SSM (MM) Block
MM Block
MM Block
Conv
Conv
<Rate the quality of the image>
LMM
Linear
top-K
SSM Block
SSM Block
SSM Block
...
SSM Block
Linear
SiLU
Linear
Mixture-of-Experts (MoE) Block
DConv
SiLU
2D-SSM
LN
State Space Model (SSM) Block
Conv 3×3 convolution
LN Layer Normalization
TopK Top-K Experts Selection
DConv Depth-wise Convolution
2D-SSM 2D-Selective Scan Module
Element-wise Addition
Concatenation
Matrix Multiplication
Frozen Parameters