# 1 Analytical Results

## 1.1 Bit Error Rate Calculations

This document presents the calculations of a theoretical upper bound and approximation for the bit error rate (BER) of the single-user multi-input multi-output (SU-MIMO) singular value decomposition (SVD) digital communication (DigCom) system.

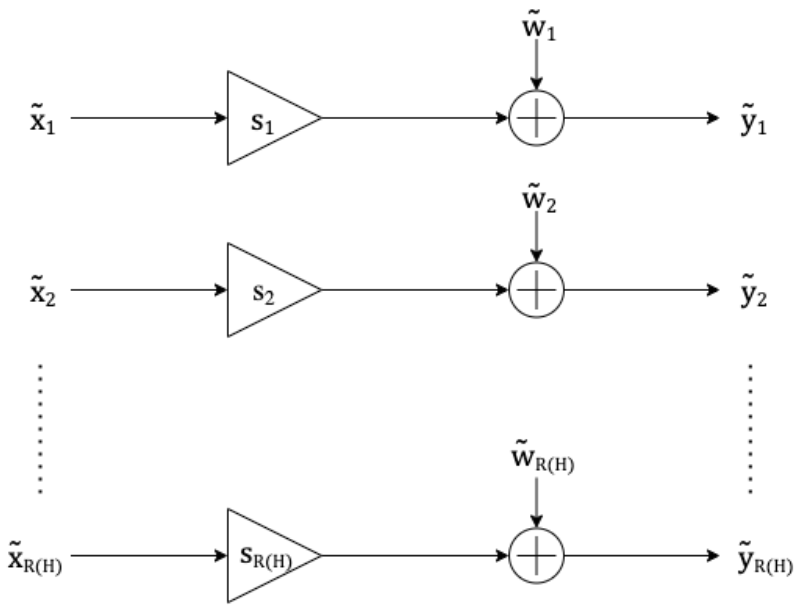


Figure 1: The $R_H$ parallel eigenchannels of the decomposed SU-MIMO SVD system.

The BER of the complete SU-MIMO SVD system can be computed as the weighted average of the BERs over each eigenchannel of the system.

$$\mathrm{BER} = \frac{1}{R_b} \sum_{i=1}^{R_H} R_{b,i} \cdot \mathrm{BER}_i \tag{1}$$

**Information Bit Rate of Each Eigenchannel.**

The information bit rate $R_{b,i}$ of eigenchannel $i$ represents the number of bits transmitted per symbol over that eigenchannel.

Under a fixed bit-allocation scheme, it is predetermined. In contrast, with adaptive bit allocation, it is determined based on the integer part of the eigenchannel's capacity and the specified data rate. The capacity $C_i$ of each eigenchannel is obtained using the Shannon capacity formula.

The total information bit rate $R_b$ is then the sum of the individual bit rates across all eigenchannels.

**Bit Error Rate of each eigenchannel [1].**

The BER of each eigenchannel $\mathrm{BER}_i$ equals the average amount of bit errors per received data symbol.

$$\mathrm{BER}_i = \frac{1}{R_{b,i}} \sum_{(\hat{\alpha},\alpha)\in\mathcal{C}_i^2} \mathrm{N}(\hat{\alpha},\alpha) \cdot \mathrm{P}[\hat{a}_i = \hat{\alpha} \wedge a_i = \alpha] \tag{2}$$

In the above equation:

- $\mathcal{C}_i^2$ is the Cartesian product of the modulation constellation used in eigenchannel $i$ with itself, representing all possible pairs of transmitted and received symbols.
- $\mathrm{N}(\hat{\alpha}, \alpha)$ is the number of bit errors between symbol $\alpha$ and symbol $\hat{\alpha}$. This equals the Hamming distance between the binary representations of both symbols.
- $\mathrm{P}[\hat{a}_i = \hat{\alpha} \wedge a_i = \alpha]$ is the joint probability that symbol $\alpha$ was transmitted and symbol $\hat{\alpha}$ was detected in eigenchannel $i$.

We can simplify this expression using Bayes' rule and by assuming that all symbols are equally likely to be transmitted. The latter can be assumed when the bits that arrive at the transmitter are independent and equally distributed.

$$\begin{aligned}
\mathrm{BER}_i &= \frac{1}{R_{b,i}} \sum_{(\hat{\alpha},\alpha)\in\mathcal{C}_i^2} \mathrm{N}(\hat{\alpha}, \alpha) \cdot \mathrm{P}[\hat{a}_i = \hat{\alpha} \mid a_i = \alpha] \cdot \mathrm{P}[a_i = \alpha] \\
\mathrm{BER}_i &= \frac{1}{R_{b,i}} \sum_{(\hat{\alpha},\alpha)\in\mathcal{C}_i^2} \mathrm{N}(\hat{\alpha}, \alpha) \cdot \mathrm{P}[\hat{a}_i = \hat{\alpha} \mid a_i = \alpha] \cdot \frac{1}{2^{R_{b,i}}} \\
\mathrm{BER}_i &= \frac{1}{R_{b,i} \cdot 2^{R_{b,i}}} \sum_{(\hat{\alpha},\alpha)\in\mathcal{C}_i^2} \mathrm{N}(\hat{\alpha}, \alpha) \cdot \mathrm{P}(\hat{\alpha}, \alpha) \qquad (3)
\end{aligned}$$

### 1.1.1 Upper Bound

At the receiver, the symbol $\hat{\alpha}$ will be detected iff the distance between the decision variable $u_i$ and $\hat{\alpha}$ is less than the distance between $u_i$ and any other symbol in the constellation. In other words, $u_i$ needs to lie within the decision area $D(\hat{\alpha})$ of the symbol $\hat{\alpha}$.

$$\mathrm{P}(\hat{\alpha}, \alpha) = \mathrm{P}(u_i \in D(\hat{\alpha}) \mid a_i = \alpha) \qquad (4)$$

The decision variable $u_i$ is given by the output of the equalizer at the receiver.

$$\begin{aligned}
u_i &= \tfrac{1}{\sigma_i\sqrt{P_i}} \cdot \tilde{y}_i \\
u_i &= \tfrac{1}{\sigma_i\sqrt{P_i}} \cdot (\sigma_i \cdot (\sqrt{P_i}\, a_i) + \tilde{w}_i) \\
u_i &= s_i + \tfrac{1}{\sigma_i\sqrt{P_i}}\, \tilde{w}_i \\
u_i &= s_i + n_i \qquad (5)
\end{aligned}$$

Here, $\tilde{\mathbf{w}} = \mathrm{U}^H \mathbf{w}$ is the noise vector after the unitary transformation at the receiver, which does not change the distribution of the noise. Therefore, the noise term $n_i$ is complex, circularly symmetric Gaussian distributed with $n_i \sim \mathcal{CN}(0, \frac{N_0}{P_i\sigma_i^2})$.
So we find that the decision variable $u_i$ is a complex, circularly symmetric Gaussian random variable with mean $a_i$ and variance $\frac{N_0}{P_i\sigma_i^2}$.

The upper bound:

$$\mathrm{P}(\hat{\alpha}, \alpha) \leq \mathrm{P}\Big(|u_i - \hat{\alpha}| < |u_i - \alpha| \mid s_i = \alpha\Big) \qquad (6)$$

It is a necessary condition for $u_i$ to be closer to $\hat{\alpha}$ than to $\alpha$ in the complex plane in order to be detected as $\hat{\alpha}$. It is however not a sufficient condition, since yet another symbol in the constellation could be even closer to $u_i$ than $\hat{\alpha}$.

This is why the above expression is an upper bound. It can be interpreted as the probability that the noise $n_i$ causes the decision variable $u_i$ to cross the decision boundary that lies halfway between $\alpha$ and $\hat{\alpha}$, instead of the probability that $n_i$ causes $u_i$ to enter the decision area of $\hat{\alpha}$.

We simplify the right hand side of Equation 6.

$$
\begin{aligned}
&= \mathrm{P}\Big(|u_i - \hat{\alpha}|^2 < |u_i - \alpha|^2 \mid a_i = \alpha\Big) \\
&= \mathrm{P}\Big(|u_i - \alpha - (\hat{\alpha} - \alpha)|^2 < |u_i - \alpha|^2 \mid a_i = \alpha\Big) \\
&= \mathrm{P}\Big(|u_i - \alpha - (\hat{\alpha} - \alpha)|^2 - |u_i - \alpha|^2 < 0 \mid a_i = \alpha\Big) \\
&= \mathrm{P}\Big(|\hat{\alpha} - \alpha|^2 - 2\Re((u_i - \alpha)(\hat{\alpha} - \alpha)^*) < 0 \mid a_i = \alpha\Big) \\
&= \mathrm{P}\Big(\Re((u_i - \alpha)(\hat{\alpha} - \alpha)^*) > \frac{|\hat{\alpha} - \alpha|^2}{2} \mid a_i = \alpha\Big) \\
&= \mathrm{P}\Big(\Re((u_i - \alpha)\frac{(\hat{\alpha} - \alpha)^*}{|\hat{\alpha} - \alpha|}) > \frac{|\hat{\alpha} - \alpha|}{2} \mid a_i = \alpha\Big) \\
&= \mathrm{P}\Big(\Re((u_i - \alpha)e^{j\theta}) > \frac{|\hat{\alpha} - \alpha|}{2} \mid a_i = \alpha\Big) \\
&= \mathrm{Q}\Big(\frac{|\hat{\alpha} - \alpha|}{2} \cdot \frac{1}{\sqrt{\frac{N_0}{2P_i\sigma_i^2}}}\Big) \\
&= \mathrm{Q}\Big(\sqrt{\frac{P_i\sigma_i^2}{2N_0}} \cdot |\hat{\alpha} - \alpha|\Big) \qquad (7)
\end{aligned}
$$

In the penultimate step, we used the fact that $\mathrm{X} = \Re((u_i - \alpha)e^{j\theta}) \mid (a_i = \alpha)$ is a real-valued Gaussian random variable with mean 0 and variance $\frac{N_0}{2P_i\sigma_i^2}$.

This follows from the observation that $u_i - \alpha|(a_i = \alpha) = u_i - a_i = n_i$. The noise term $n_i$ is circularly symmetric complex Gaussian, so rotation by $e^{j\theta}$ does not change its distribution, and the real component is normally distributed with the same mean and half the variance.

Thus, given this upper bound on $\mathrm{P}(\hat{\alpha}, \alpha)$, we can compute an upper bound on the BER of each eigenchannel $\mathrm{BER}_i$ starting from 3 as follows:

$$
\mathrm{BER}_i \leq \frac{1}{R_{b,i} \cdot 2^{R_{b,i}}} \sum_{(\hat{\alpha},\alpha)\in\mathcal{C}_i^2} \mathrm{N}(\hat{\alpha}, \alpha) \cdot \mathrm{Q}\Big(\sqrt{\frac{P_i\sigma_i^2}{2N_0}} \cdot |\hat{\alpha} - \alpha|\Big) \qquad (8)
$$

### 1.1.2 Approximation

Now, we only consider symbol errors for which the decision variable $u_i$ is mapped to one of the nearest neighbors of the transmitted symbol $s_i = \alpha$. In other words, we only take into account the terms in the summation of Equation 8 for which $\hat{\alpha}$ is a nearest neighbor of $\alpha$ in the modulation constellation.

$$
\mathrm{BER}_i \approx \frac{1}{R_{b,i} \cdot 2^{R_{b,i}}} \sum_{\alpha\in\mathcal{C}_i} \sum_{\hat{\alpha}\in\mathcal{S}(\alpha)} \mathrm{N}(\hat{\alpha}, \alpha) \cdot \mathrm{Q}\Big(\sqrt{\frac{P_i\sigma_i^2}{2N_0}} \cdot d_{\min}\Big) \qquad (9)
$$

In the above equation:

- $\mathcal{S}(\alpha)$ is the set of nearest neighbors of symbol $\alpha$ in the modulation constellation.
- $d_{min}$ is the minimum distance between two symbols in the modulation constellation. This is a constant for the considered constellation.

Because we make use of gray coding during the mapping of bits to symbols, the Hamming distance $\mathrm{N}(\hat{\alpha}, \alpha)$ between two nearest neighbor symbols equals 1 for all pairs of nearest neighbors.

$$\mathrm{BER}_i \approx \frac{1}{R_{b,i} \cdot 2^{R_{b,i}}} \sum_{\alpha \in \mathcal{C}_i} \sum_{\hat{\alpha} \in \mathcal{S}(\alpha)} \mathrm{Q}\Big(\sqrt{\frac{P_i \sigma_i^2}{2N_0}} \cdot d_{\min}\Big)$$

$$\mathrm{BER}_i \approx \frac{1}{R_{b,i}} \mathrm{Q}\Big(\sqrt{\frac{P_i \sigma_i^2}{2N_0}} \cdot d_{\min}\Big) \cdot \frac{1}{2^{R_{b,i}}} \sum_{\alpha \in \mathcal{C}_i} |\mathcal{S}(\alpha)| \tag{10}$$

The last term in Equation 10 represents the average number of nearest neighbors per symbol in the constellation. This equals a constant $K$ that only depends on the type and size of the considered constellation.

Therefore, we can further simplify Equation 10 to obtain a final approximation for the BER of each eigenchannel.

$$\mathrm{BER}_i \approx \frac{K}{\log_2 M_i} \cdot \mathrm{Q}\Big(\sqrt{\frac{P_i \sigma_i^2}{2N_0}}\, d_{\min}\Big) \tag{11}$$

The constants $K$ and $d_{\min}$ can easily be calculated for the modulation constellations that are considered in this system. Table 1 provides the formulas.

| Constellation | $K$ | $d_{\min}$ |
|---|---|---|
| $M$-PAM | $\frac{2(M-1)}{M}$ | $\sqrt{\frac{12}{M^2-1}}$ |
| $M$-PSK | $\begin{cases} 1, & M = 2 \\ 2, & M > 2 \end{cases}$ | $2 \cdot \lvert \sin(\frac{\pi}{M}) \rvert$ |
| $M$-QAM | $\frac{4(\sqrt{M}-1)}{\sqrt{M}}$ | $\sqrt{\frac{6}{M-1}}$ |

Table 1: The average number of nearest neighbors $K$ and the distance between nearest neighbors $d_{\min}$ all considered constellations.

### 1.1.3 Note

In all of the above calculations, we assumed that the singular values $\sigma_i$ are known. However, since we consider a general flat fading channel whose gains are independent and identically distributed (i.i.d.) complex Gaussian random variables, the singular values are themselves random variables.

Although the joint distribution of the singular values can be taken into account directly [2], doing so would substantially increase the analytical complexity. For this reason, we choose to treat the singular values as fixed in the analysis and instead evaluate the analytical expressions for the system performance over multiple channel realizations.

## References


[1] M. M. Nele Noels, *Syllabus Communicatietheorie*. Ghent, Belgium: Ghent University, 2022-2023.

[2] J. Shen, "On the singular values of Gaussian random matrices," *Linear Algebra and its Applications*, vol. 326, pp. 1–14, Mar. 2001.