Lab: Routing Using RIPv2 and Secure Administrative Access

Group size = 1

Student Name: Waqas Salman

Objective

To familiarize with the basic routing commands and functions of CISCO routers such as assigning IP address to the router interfaces, dynamic routing like RIP version 2 protocols and some troubleshooting commands. In this lab we will also learn how to secure a network device for administrative access.

Materials

- Three computers with LAN port
- Three Cisco 2911series Routers

Theory:

After assigning IP addresses to a router's interfaces and activating them, routers "know" only how to reach these local networks. For instance, on Fig.1 below, R1 is aware only of Networks 'A' and 'B', similarly outer R2 "knows" only how to reach networks 'B', 'C' and 'E' and so on. These directly connected networks are listed in the routing table of each router. If for example now R1 has to send packet to network 'C', it will drop the packet, since there's no route pointing to network 'C' in its routing table. The same problem exists with a packet destined for network 'D' and 'E'.

In this lab you will configure full connectivity using a **dynamic routing protocol RIPv2**.

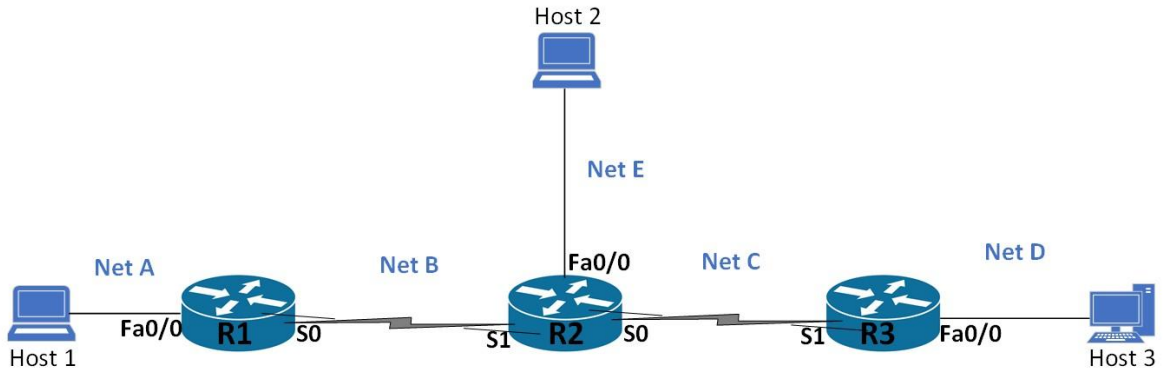

Figure 1: Network Topology

Procedure:

Build the topology given above on Fig.1. Connect the Serial/Ethernet cables, so that the **DCE end is connected to the lowest serial interfaces** i.e. S0 of all routers. Consider the network address you have is 196.0.0.0/24. Provide a subnet address scheme appropriate for these host requirements:

Net A = 25 hosts
Net B = 2 hosts
Net C = 2 hosts
Net D = 30 hosts
Net E = 10 hosts

The second and third octets of the above IP address (196.0.0.0/24) is the last 4 digits of your student ID (10.octet2.octet3.0). For example, if your id is 20891261, octet2=12 and octet3=61 so the address is 196.12.61.0/24. If any 2 digits is 00 or 01 use 10. Assign lowest IP of the corresponding subnet to the router's interfaces, and highest IP to the hosts. Rename the routers R1, R2 and R3 as your last name concatenated with corresponding router number 1, 2 and 3. For example, if your last name is Jennifer, routers name will be Jennifer1, Jennifer2, Jennifer3 correspondingly.

Task #1: Do the subnetting (VLSM) and fill the following table. Assign lowest IP from range to router's interface, highest IP to Host.

	Hardware	IP address	Network Address	Subnet mask	Default gateway
R1	FastEthernet0/0	196.79.38.33	196.79.38.32	255.255.255.224	N.A
	Serial0	196.79.38.81	196.79.38.80	255.255.255.252	N.A.
R2	Serial1	196.79.38.82	196.79.38.80	255.255.255.252	N.A.
	Serial0	196.79.38.85	196.79.38.84	255.255.255.252	N.A.
	Gigabitethernet0/0	196.79.38.65	196.79.38.64	255.255.255.240	N.A.
R3	Gigabitethernet0/0	196.79.38.1	196.79.38.0	255.255.255.224	N.A.
	Serial1	196.79.38.86	196.79.38.84	255.255.255.252	N.A.
H1	NIC	196.79.38.62	196.79.38.32	255.255.255.224	196.79.38.33
H2	NIC	196.79.38.78	196.79.38.64	255.255.255.240	196.79.38.65
H3	NIC	196.79.38.30	196.79.38.0	255.255.255.224	196.79.38.1

Table 1

Task #2: Create your topology by connecting all the devices as shown in the network topology fig1 with appropriate cables.

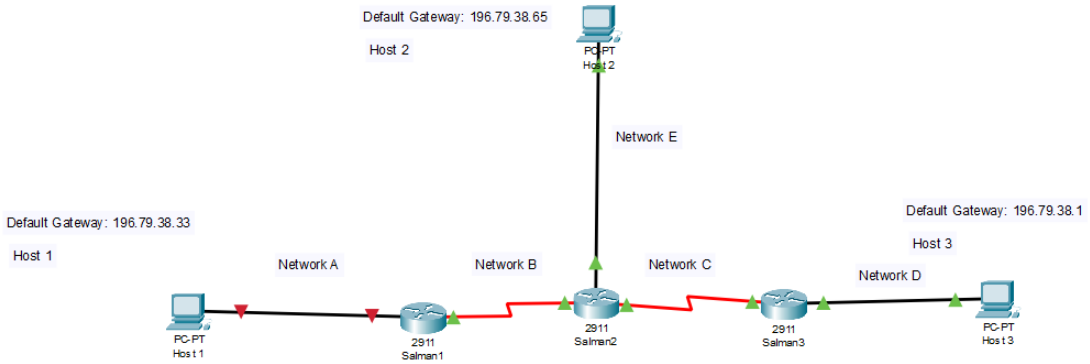

Comments: The topology consists of three routers (Salman1, Salman2, Salman3) connected in series using serial cables. H1 is connected to Salman1 via Fast Ethernet, H2 is connected to Salman2 via Gigabitethernet, and H3 is connected to Salman3 via Fast Ethernet. Straight-through copper cables are

used for router-to-host connections since they connect different device types. Serial cables are used for router-to-router connections as these are WAN links. The DCE end of each serial cable is connected to the S0 interface as required.

Task #3: Access the routers through **console port** and configure IP address in the corresponding interfaces. Also configure IP address to the Hosts. Assign lowest IP from range to router's interface, highest IP to Host.

Router> **enable**

Router# **configure terminal**

Router(config)# **interface** fa 0/1

Router(config-if)# **ip address** *IP_Address Mask*

Task #4: R1# show ip interface brief

Take a screenshot, paste it and write your comments.

```
Salman1#
%SYS-5-CONFIG_I: Configured from console by console
show ip interface brief
Interface              IP-Address      OK? Method Status                Protocol
GigabitEthernet0/0     unassigned      YES NVRAM  administratively down down
GigabitEthernet0/1     196.79.38.33    YES manual up                    up
GigabitEthernet0/2     unassigned      YES NVRAM  administratively down down
Serial0/3/0            196.79.38.81    YES manual up                    up
Serial0/3/1            unassigned      YES NVRAM  administratively down down
Vlan1                  unassigned      YES NVRAM  administratively down down
```

Comments: The show ip interface brief command on Salman1 shows a summary of all interfaces, their IP addresses, and their current status.

Task #6: Now ping from H1 to H3 and H1 to H2 show your result. If it can ping write why they can ping and if not write why they can not ping.

```
Cisco Packet Tracer PC Command Line 1.0
C:\>ping 196.79.38.30

Pinging 196.79.38.30 with 32 bytes of data:

Request timed out.
Request timed out.
Request timed out.
Request timed out.

Ping statistics for 196.79.38.30:
    Packets: Sent = 4, Received = 0, Lost = 4 (100% loss),

C:\>ping 196.79.38.78

Pinging 196.79.38.78 with 32 bytes of data:

Request timed out.
Request timed out.
Request timed out.
Request timed out.

Ping statistics for 196.79.38.78:
    Packets: Sent = 4, Received = 0, Lost = 4 (100% loss),

C:\>
```

Comments: H1 is on Network A (196.79.38.32/27) and H3 is on Network D (196.79.38.0/27). These are completely different networks. When H1 tries to reach H3 it sends the packet to its default gateway Salman1. However Salman1 only knows about Network A and Network B in its routing table it has no idea how to reach Network D where H3 lives. So Salman1 drops the packet and the ping fails. Same reason. H1 is on Network A and H2 is on Network E (196.79.38.64/28). Salman1 does not have a route to Network E in its routing table so it drops the packet.

Task #7: Now do **show ip route** on all the routers.

```
Salman1#show ip route
Codes: L - local, C - connected, S - static, R - RIP, M - mobile, B - BGP
       D - EIGRP, EX - EIGRP external, O - OSPF, IA - OSPF inter area
       N1 - OSPF NSSA external type 1, N2 - OSPF NSSA external type 2
       E1 - OSPF external type 1, E2 - OSPF external type 2, E - EGP
       i - IS-IS, L1 - IS-IS level-1, L2 - IS-IS level-2, ia - IS-IS inter area
       * - candidate default, U - per-user static route, o - ODR
       P - periodic downloaded static route

Gateway of last resort is 0.0.0.0 to network 0.0.0.0

     196.79.38.0/24 is variably subnetted, 4 subnets, 3 masks
C       196.79.38.32/27 is directly connected, GigabitEthernet0/1
L       196.79.38.33/32 is directly connected, GigabitEthernet0/1
C       196.79.38.80/30 is directly connected, Serial0/3/0
L       196.79.38.81/32 is directly connected, Serial0/3/0
S*   0.0.0.0/0 is directly connected, Serial0/3/0
```

```
Salman2#
%SYS-5-CONFIG_I: Configured from console by console
show ip route
Codes: L - local, C - connected, S - static, R - RIP, M - mobile, B - BGP
       D - EIGRP, EX - EIGRP external, O - OSPF, IA - OSPF inter area
       N1 - OSPF NSSA external type 1, N2 - OSPF NSSA external type 2
       E1 - OSPF external type 1, E2 - OSPF external type 2, E - EGP
       i - IS-IS, L1 - IS-IS level-1, L2 - IS-IS level-2, ia - IS-IS inter area
       * - candidate default, U - per-user static route, o - ODR
       P - periodic downloaded static route

Gateway of last resort is not set

     196.79.38.0/24 is variably subnetted, 6 subnets, 3 masks
C       196.79.38.64/28 is directly connected, GigabitEthernet0/0
L       196.79.38.65/32 is directly connected, GigabitEthernet0/0
C       196.79.38.80/30 is directly connected, Serial0/3/1
L       196.79.38.82/32 is directly connected, Serial0/3/1
C       196.79.38.84/30 is directly connected, Serial0/3/0
L       196.79.38.85/32 is directly connected, Serial0/3/0
```

```
Salman3#show ip route
Codes: L - local, C - connected, S - static, R - RIP, M - mobile, B - BGP
       D - EIGRP, EX - EIGRP external, O - OSPF, IA - OSPF inter area
       N1 - OSPF NSSA external type 1, N2 - OSPF NSSA external type 2
       E1 - OSPF external type 1, E2 - OSPF external type 2, E - EGP
       i - IS-IS, L1 - IS-IS level-1, L2 - IS-IS level-2, ia - IS-IS inter area
       * - candidate default, U - per-user static route, o - ODR
       P - periodic downloaded static route

Gateway of last resort is 0.0.0.0 to network 0.0.0.0

     196.79.38.0/24 is variably subnetted, 4 subnets, 3 masks
C       196.79.38.0/27 is directly connected, GigabitEthernet0/0
L       196.79.38.1/32 is directly connected, GigabitEthernet0/0
C       196.79.38.84/30 is directly connected, Serial0/3/1
L       196.79.38.86/32 is directly connected, Serial0/3/1
S*   0.0.0.0/0 is directly connected, Serial0/3/1
```

Task #8: Now you configure RIP protocol for full connectivity.

Router1# config terminal
Router1(config)# router rip
Router1(config-router)#version 2
Router1(config-router)# no auto-summary
Router1(config-router)#network *Network*
Router1(config)#exit

Task #9: Now ping from H1 to H3 and H2 to H3, show your result. If it can ping write why they can ping and if not write why they cannot ping.

```
C:\>ping 196.79.38.30

Pinging 196.79.38.30 with 32 bytes of data:

Reply from 196.79.38.30: bytes=32 time=2ms TTL=125
Reply from 196.79.38.30: bytes=32 time=2ms TTL=125
Reply from 196.79.38.30: bytes=32 time=13ms TTL=125
Reply from 196.79.38.30: bytes=32 time=12ms TTL=125

Ping statistics for 196.79.38.30:
    Packets: Sent = 4, Received = 4, Lost = 0 (0% loss),
Approximate round trip times in milli-seconds:
    Minimum = 2ms, Maximum = 13ms, Average = 7ms

C:\>ping 196.79.38.78

Pinging 196.79.38.78 with 32 bytes of data:

Reply from 196.79.38.78: bytes=32 time=15ms TTL=126
Reply from 196.79.38.78: bytes=32 time=11ms TTL=126
Reply from 196.79.38.78: bytes=32 time=1ms TTL=126
Reply from 196.79.38.78: bytes=32 time=4ms TTL=126

Ping statistics for 196.79.38.78:
    Packets: Sent = 4, Received = 4, Lost = 0 (0% loss),
Approximate round trip times in milli-seconds:
    Minimum = 1ms, Maximum = 15ms, Average = 7ms
```

```
C:\>ping 196.79.38.30

Pinging 196.79.38.30 with 32 bytes of data:

Reply from 196.79.38.30: bytes=32 time=1ms TTL=126
Reply from 196.79.38.30: bytes=32 time=3ms TTL=126
Reply from 196.79.38.30: bytes=32 time=11ms TTL=126
Reply from 196.79.38.30: bytes=32 time=11ms TTL=126

Ping statistics for 196.79.38.30:
    Packets: Sent = 4, Received = 4, Lost = 0 (0% loss),
Approximate round trip times in milli-seconds:
    Minimum = 1ms, Maximum = 11ms, Average = 6ms
```

Comments: Before configuring RIPv2, Salman1 only knew about Network A and Network B. Now after RIPv2 is configured all routers automatically share their routing tables with each other. Salman1 now knows about Network D through Salman2 and Salman3. So when H1 sends a packet to H3. Same reason. H2 is on Network E connected to Salman2. Salman2 now knows about Network D through RIPv2 updates received from Salman3.

Task #10: Now do **show ip route** on all the routers.

```
Salman1#show ip route
Codes: L - local, C - connected, S - static, R - RIP, M - mobile, B - BGP
       D - EIGRP, EX - EIGRP external, O - OSPF, IA - OSPF inter area
       N1 - OSPF NSSA external type 1, N2 - OSPF NSSA external type 2
       E1 - OSPF external type 1, E2 - OSPF external type 2, E - EGP
       i - IS-IS, L1 - IS-IS level-1, L2 - IS-IS level-2, ia - IS-IS inter area
       * - candidate default, U - per-user static route, o - ODR
       P - periodic downloaded static route

Gateway of last resort is 0.0.0.0 to network 0.0.0.0

     196.79.38.0/24 is variably subnetted, 7 subnets, 4 masks
R       196.79.38.0/27 [120/2] via 196.79.38.82, 00:00:27, Serial0/3/0
C       196.79.38.32/27 is directly connected, GigabitEthernet0/1
L       196.79.38.33/32 is directly connected, GigabitEthernet0/1
R       196.79.38.64/28 [120/1] via 196.79.38.82, 00:00:27, Serial0/3/0
C       196.79.38.80/30 is directly connected, Serial0/3/0
L       196.79.38.81/32 is directly connected, Serial0/3/0
R       196.79.38.84/30 [120/1] via 196.79.38.82, 00:00:27, Serial0/3/0
S*   0.0.0.0/0 is directly connected, Serial0/3/0
```

```
Salman2#show ip route
Codes: L - local, C - connected, S - static, R - RIP, M - mobile, B - BGP
       D - EIGRP, EX - EIGRP external, O - OSPF, IA - OSPF inter area
       N1 - OSPF NSSA external type 1, N2 - OSPF NSSA external type 2
       E1 - OSPF external type 1, E2 - OSPF external type 2, E - EGP
       i - IS-IS, L1 - IS-IS level-1, L2 - IS-IS level-2, ia - IS-IS inter area
       * - candidate default, U - per-user static route, o - ODR
       P - periodic downloaded static route

Gateway of last resort is not set

     196.79.38.0/24 is variably subnetted, 8 subnets, 4 masks
R       196.79.38.0/27 [120/1] via 196.79.38.86, 00:00:28, Serial0/3/0
R       196.79.38.32/27 [120/1] via 196.79.38.81, 00:00:10, Serial0/3/1
C       196.79.38.64/28 is directly connected, GigabitEthernet0/0
L       196.79.38.65/32 is directly connected, GigabitEthernet0/0
C       196.79.38.80/30 is directly connected, Serial0/3/1
L       196.79.38.82/32 is directly connected, Serial0/3/1
C       196.79.38.84/30 is directly connected, Serial0/3/0
L       196.79.38.85/32 is directly connected, Serial0/3/0
```

```
Salman3#show ip route
Codes: L - local, C - connected, S - static, R - RIP, M - mobile, B - BGP
       D - EIGRP, EX - EIGRP external, O - OSPF, IA - OSPF inter area
       N1 - OSPF NSSA external type 1, N2 - OSPF NSSA external type 2
       E1 - OSPF external type 1, E2 - OSPF external type 2, E - EGP
       i - IS-IS, L1 - IS-IS level-1, L2 - IS-IS level-2, ia - IS-IS inter area
       * - candidate default, U - per-user static route, o - ODR
       P - periodic downloaded static route

Gateway of last resort is 0.0.0.0 to network 0.0.0.0

     196.79.38.0/24 is variably subnetted, 7 subnets, 4 masks
C       196.79.38.0/27 is directly connected, GigabitEthernet0/0
L       196.79.38.1/32 is directly connected, GigabitEthernet0/0
R       196.79.38.32/27 [120/2] via 196.79.38.85, 00:00:14, Serial0/3/1
R       196.79.38.64/28 [120/1] via 196.79.38.85, 00:00:14, Serial0/3/1
R       196.79.38.80/30 [120/1] via 196.79.38.85, 00:00:14, Serial0/3/1
C       196.79.38.84/30 is directly connected, Serial0/3/1
L       196.79.38.86/32 is directly connected, Serial0/3/1
S*   0.0.0.0/0 is directly connected, Serial0/3/1
```

Comments: After configuring RIPv2 all three routers now have complete routing tables containing all five networks. Networks marked with C are directly connected and were always known. Networks marked with R were dynamically learned through RIPv2 updates. The hop count increases by 1 for every router the route passes through which is why Net A appears as hop count 2 on Salman3 since it must pass through Salman2 first to reach Salman1.

Task #11: Show your Routers configuration using the command ***show running-config*.**

```
Salman1#show running-config
Building configuration...

Current configuration : 1248 bytes
!
version 15.1
no service timestamps log datetime msec
no service timestamps debug datetime msec
no service password-encryption
!
hostname Salman1
!
!
!
!
!
!
!
!
no ip cef
no ipv6 cef
!
!
 --More-- |
```

Task #12: What is the difference between static routing and dynamic routing?

Comments: Static routing is when a network administrator manually types in the routes in the routing table. The router does not learn routes on its own you have to tell it exactly where every network is. If the network topology changes, the administrator has to manually update every router again. Whereas, in dynamic routing routers automatically discover and share route information with each other using a routing protocol like RIPv2. If a new network is added or a link goes down, routers automatically update their routing tables without any manual intervention.

Securing the network infrastructure is crucial to overall network security. The network infrastructure includes router, switches, endpoints and other devices. To protect these assets in this part of the lab we will configure password and banner.

Task #13: Configure a minimum password length for all routers of 10 characters.

security passwords min-length *10*

Task #14: Configure the enable secret password.
enable secret *password*

Task #15: Configure the password on the console line.

line console 0
password *password*
exec-timeout *5 0* ***login***

Task #16: Explain the three different types of passwords you configured above.

Minimum Password Length:
This is not a password itself but a security policy that enforces that no password on the router can be set to less than 10 characters. It prevents weak short passwords from being configured on any line or interface. If someone tries to set a password shorter than 10 characters the router will reject it.
Enable Secret Password:
This password protects access to privileged EXEC mode the mode you enter when you type enable and see the # prompt. Without this password anyone with console access could type enable and gain full control of the router configuration. The enable secret is stored as an MD5 hash in the configuration
Console Line Password:
This password protects physical access to the router through the console port, the port you plug a cable into directly on the router. Without this password anyone who physically walks up to the router and plugs in a console cable can access it freely.

Task #17: Configure the password on the virtual terminal lines.

line vty 0 4
password *password*
exec-timeout 5 0 login

Task #18: Configure routers so that it encrypts all the passwords.

service password-encryption

Task #19: Configure a warning message (banner) to display prior to login.

banner motd *$Unauthorized access strictly prohibited$*

Task #20: Conclusion

Describe briefly what you learned in this lab:

In this lab I learned how to perform VLSM subnetting to efficiently allocate IP addresses across multiple networks. I configured IP addresses on Cisco router interfaces and host machines to establish basic connectivity.
I learned the importance of dynamic routing by seeing firsthand how pings failed before RIPv2 was configured and succeeded after, because routers could now automatically share their routing tables and learn about all networks in the topology.
Finally I learned how to secure network devices by configuring password policies, enable secret passwords, console and VTY line passwords, password encryption and login banners to prevent unauthorized access to the router.

Note:

1. *Demo your lab in the class.*
2. *Save your configuration and Submit both Packet Tracer file and Report. In the report please clearly mention your password.*