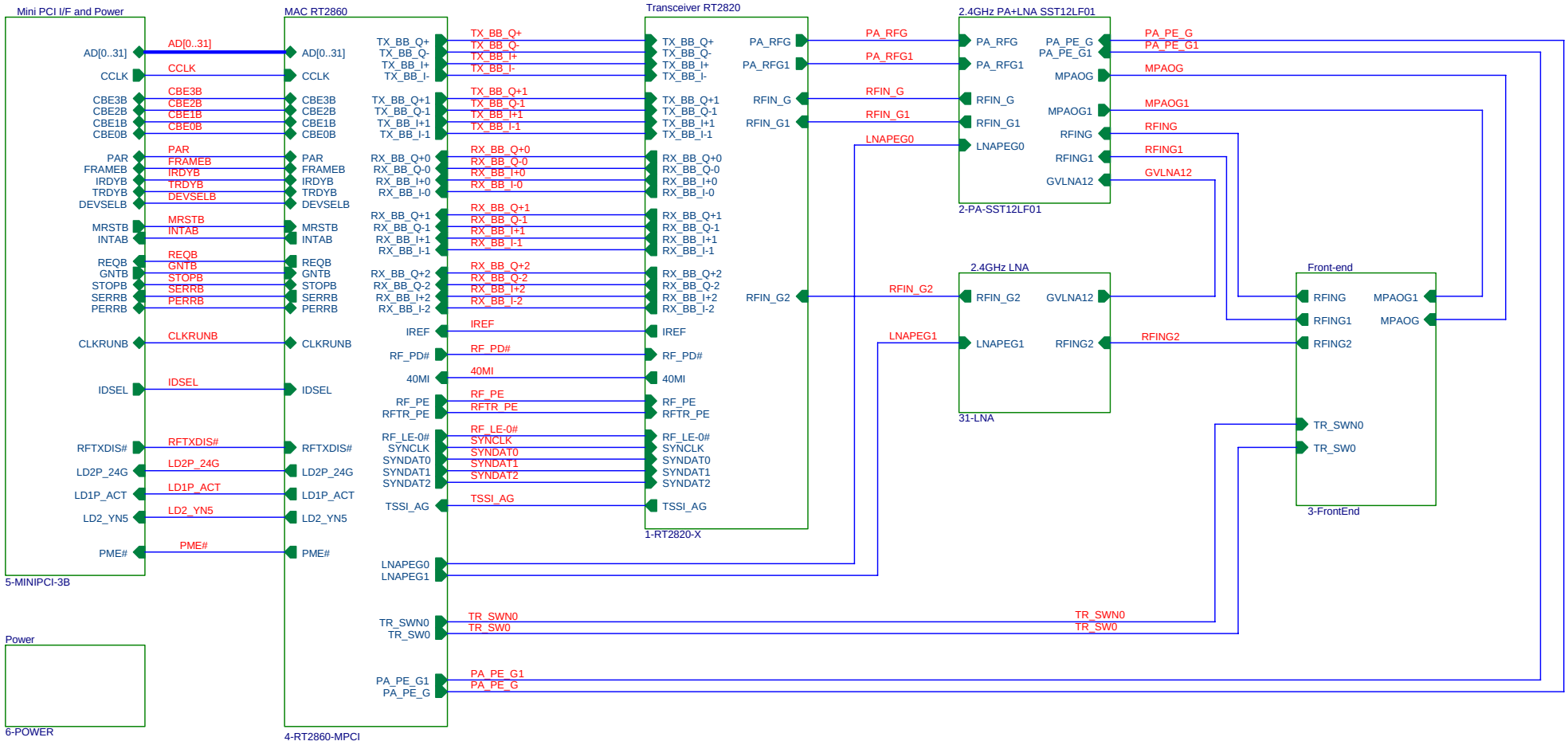

Filename:
MPCI-RT2800P-V12ST-FE-2X3-061205.DSN

Ralink	RALINK TECHNOLOGY, CORP.	
Title	2.4GHz Mini PCI MIMO - RT2860 + RT2820	
Size B	Document Number MPCI-RT2800P-V12ST-FE-2X3.SCH	Rev 1.2
Date: Tuesday, December 05, 2006	Sheet 1 of 9	

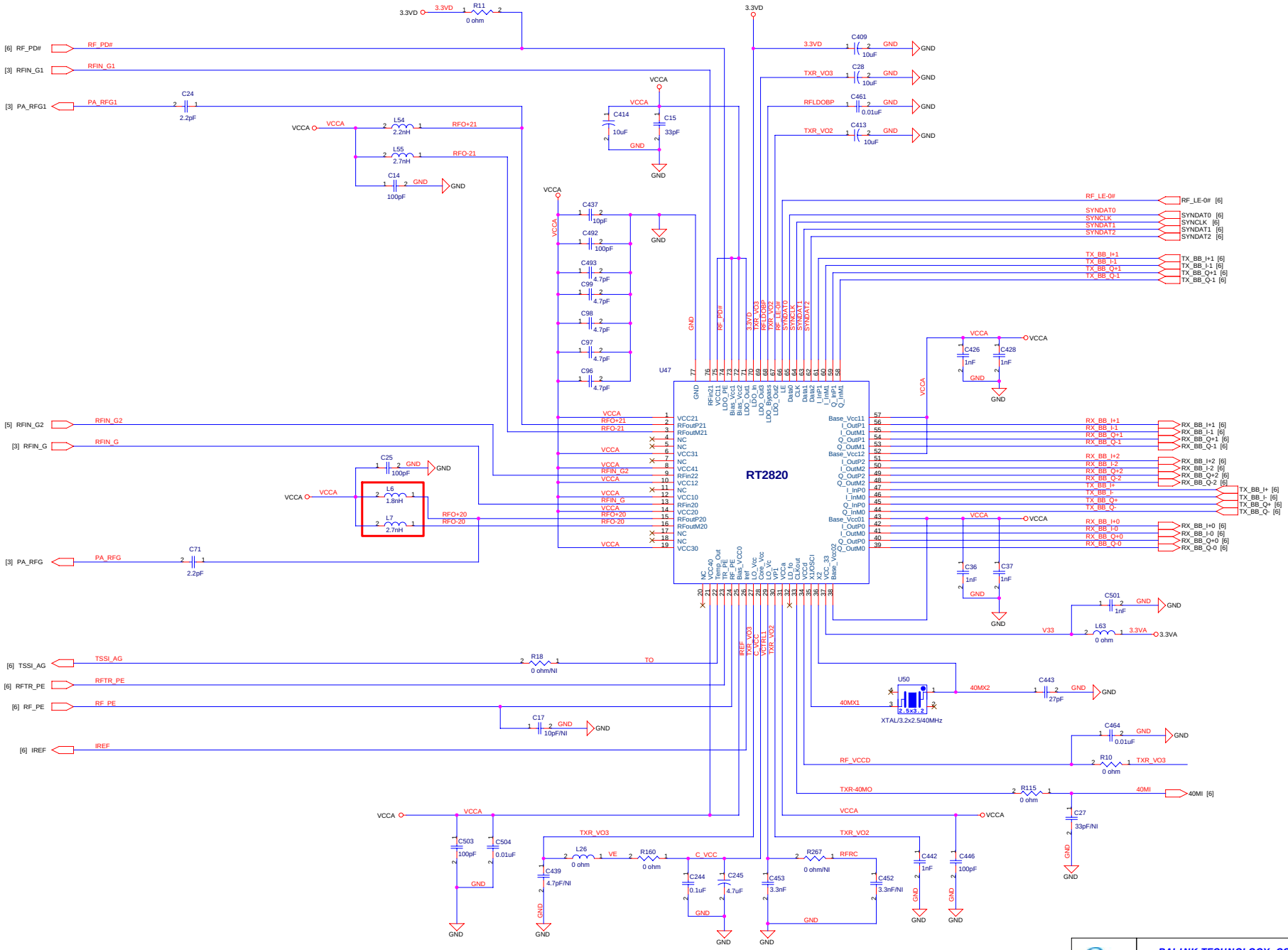

RALINK TECHNOLOGY, CORP. CONFIDENTIAL

Title	2T3R Dual Band Transceiver - RT2820	
Size C	Document Number 1-RT2820-X.SCH	Rev 1.2
Date: Tuesday, December 05, 2006	Sheet 2 of 9	

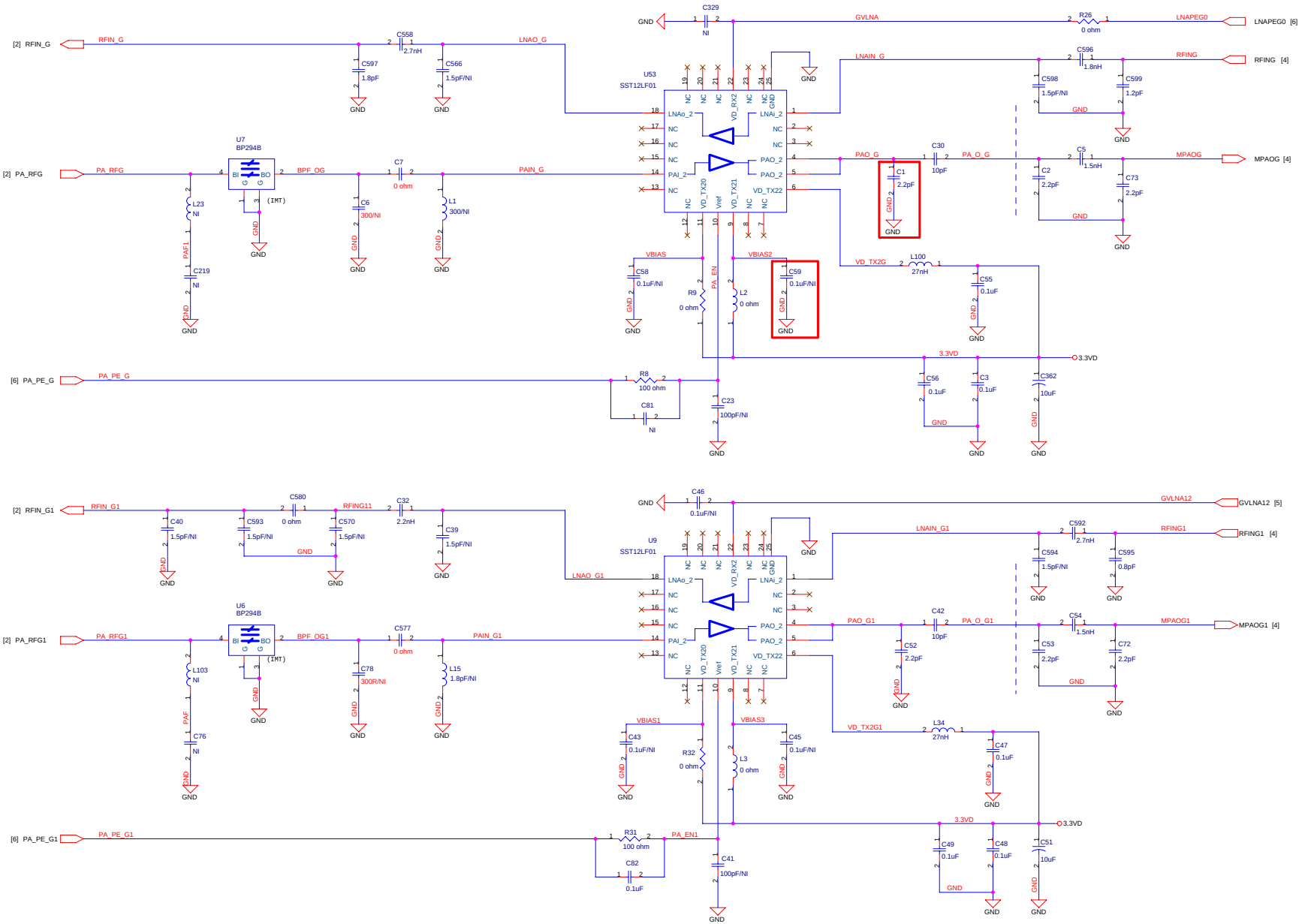

RALINK TECHNOLOGY, CORP. CONFIDENTIAL

Title	2.4GHz PA+LNA	
Size C	Document Number 2-PA-SST12LF01.SCH	Rev 1.2
Date: Tuesday, December 05, 2006	Sheet 3 of 9	

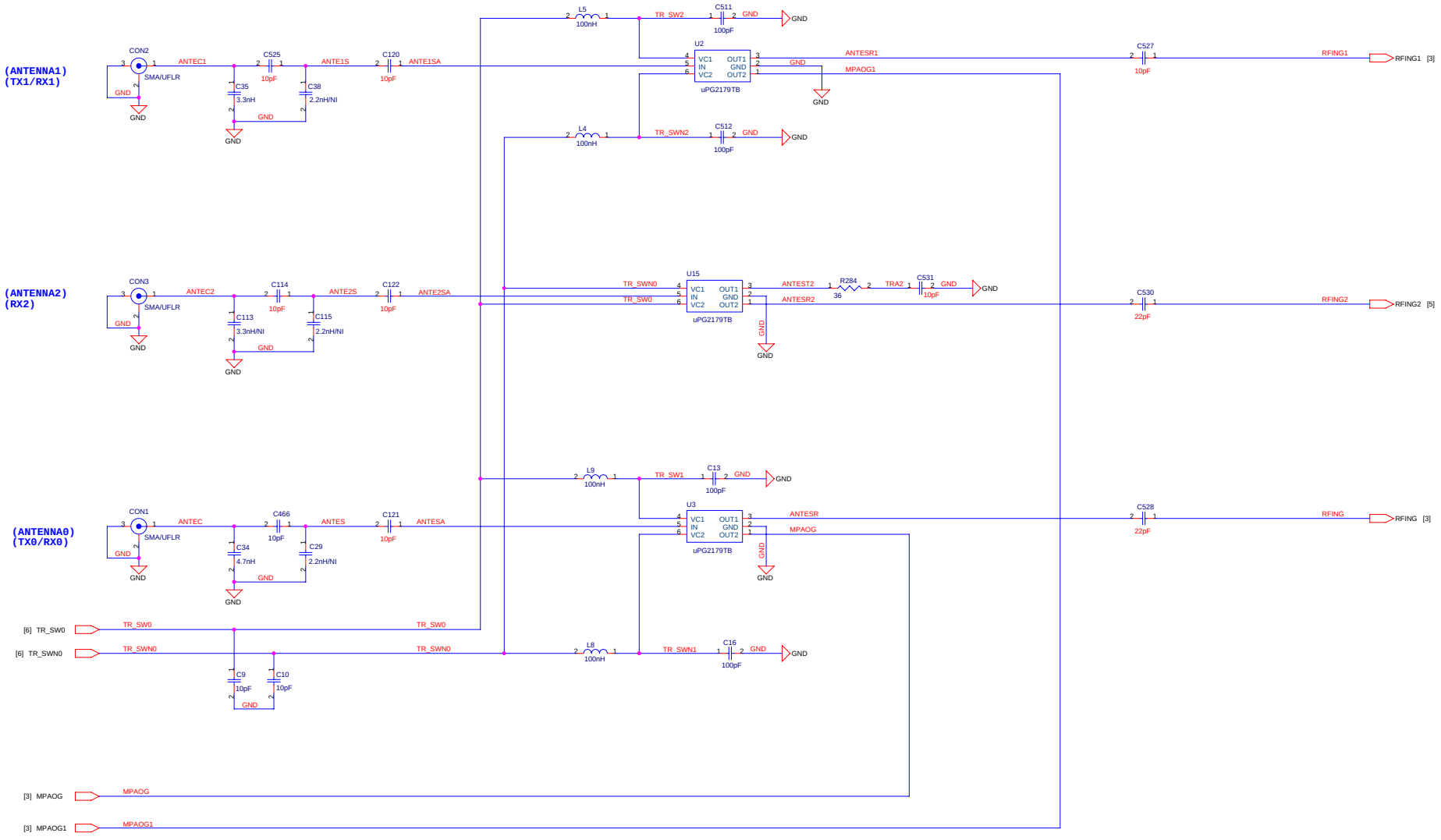

RALINK TECHNOLOGY, CORP. CONFIDENTIAL

Title	Front-End	
Size C	Document Number 3-FrontEnd.SCH	Rev 1.2
Date: Wednesday, November 15, 2006	Sheet 4 of 9	

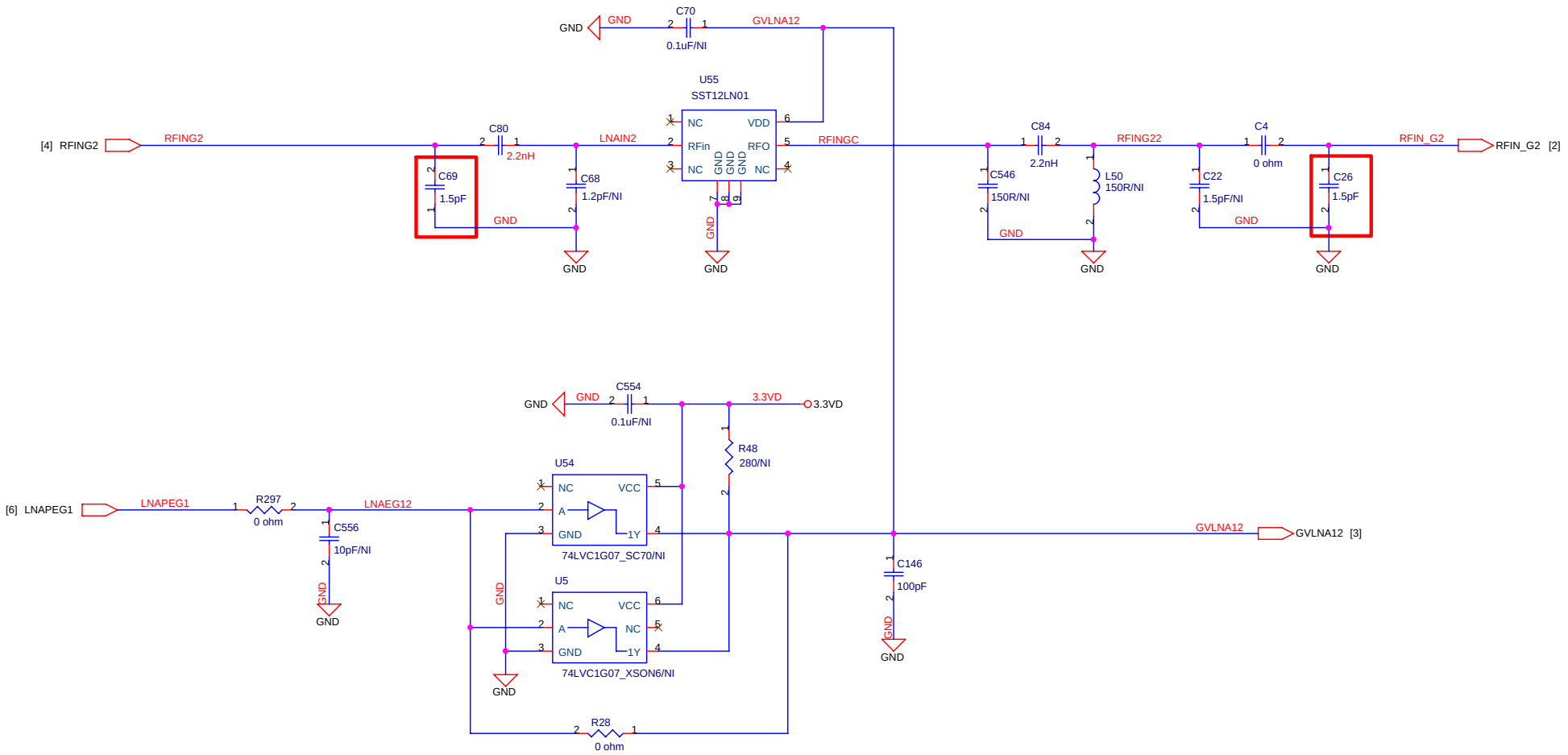

RALINK TECHNOLOGY, CORP. CONFIDENTIAL

Title	LNA - 2.4GHz	
Size B	Document Number 31-LNA.SCH	Rev 1.2
Date: Tuesday, December 05, 2006	Sheet 5 of 9	

Type	SEL5G_N	SEL5G_P
93C46	0	0
93C66	0	1
93C86	1	0

Mini PCI I/F	Pin Name
Pin-11	LD1P_ACT
Pin-12	LD2P_24G
Pin-14	LD2_YN5

U31
RT2860

U30
93C66-SOP

Place RT1 close to Power Amp.

RALINK TECHNOLOGY, CORP.

Title	WLAN MAC+BBP - RT2860		
Size C	Document Number 4-RT2860-MPCI.SCH		Rev 1.2
Date: Wednesday, November 15, 2006	Sheet 6	of 9	

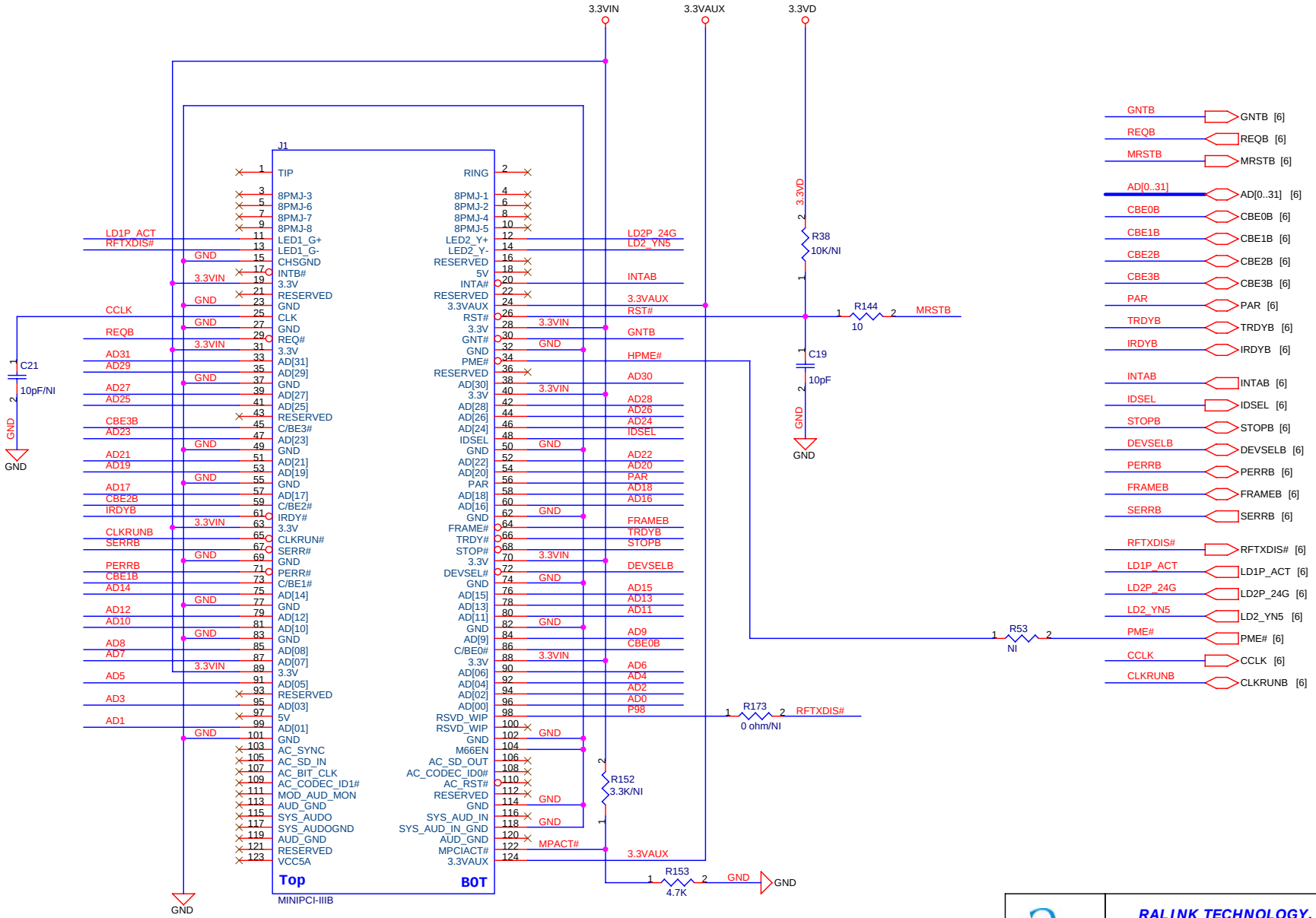

RALINK TECHNOLOGY, CORP. CONFIDENTIAL

Title	Mini PCI Interface and Power	
Size B	Document Number 5-MINIPCI-3B.SCH	Rev 1.2
Date: Wednesday, November 15, 2006	Sheet 7 of 9	

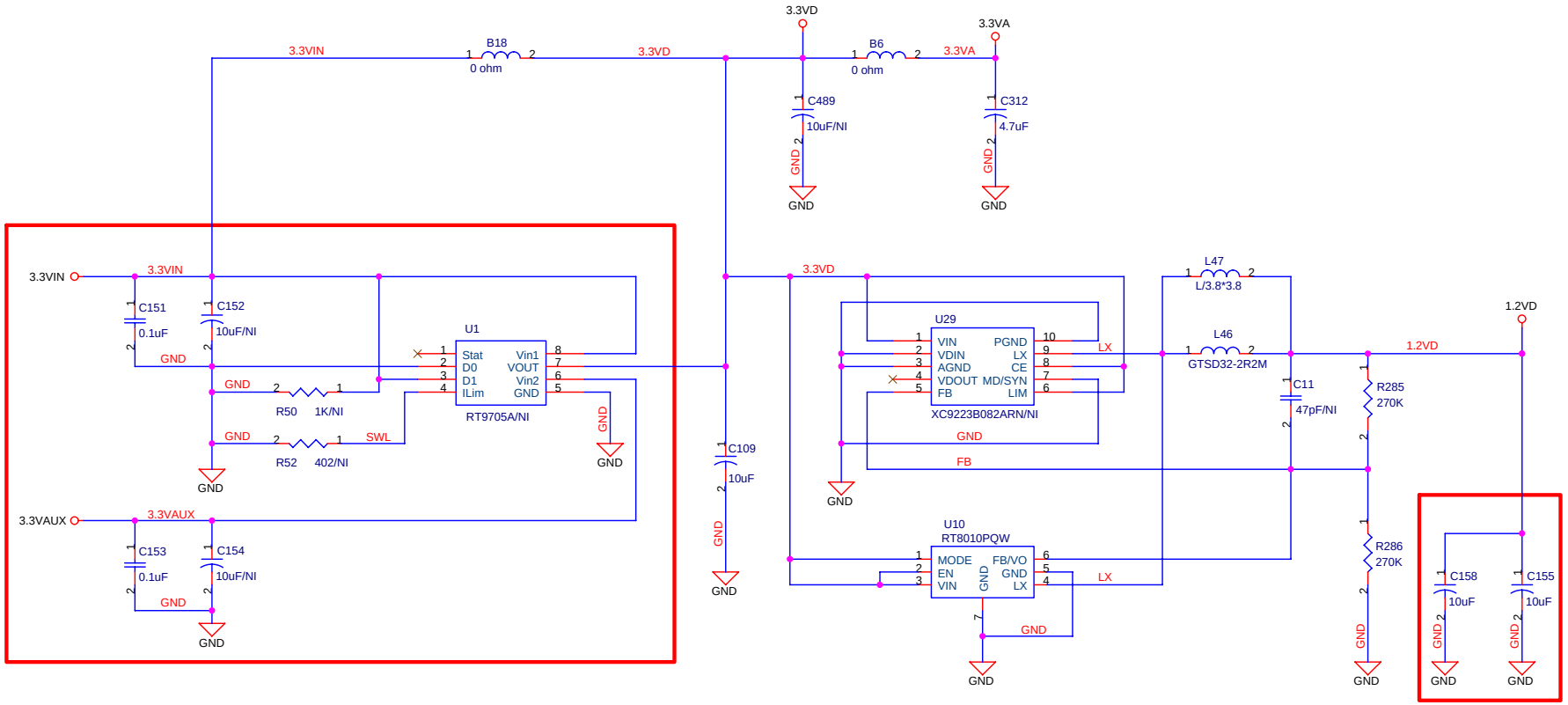

Regulator	Install	Not Install	C11	R285	R286
XC9223B	U29,C11, R285,R286	U10	47pF	150K	300K
RT8010 (Fixed)	U10	U29,C11, R285,R286	NI	0 ohm	NI
RT8010 (ADJ)	U10,C11, R285,R286	U29	22pF	270K	270K

RALINK TECHNOLOGY, CORP. CONFIDENTIAL

Title	Power Supply	
Size B	Document Number 6-POWER.SCH	Rev 1.2
Date: Wednesday, November 15, 2006	Sheet 8 of 9	

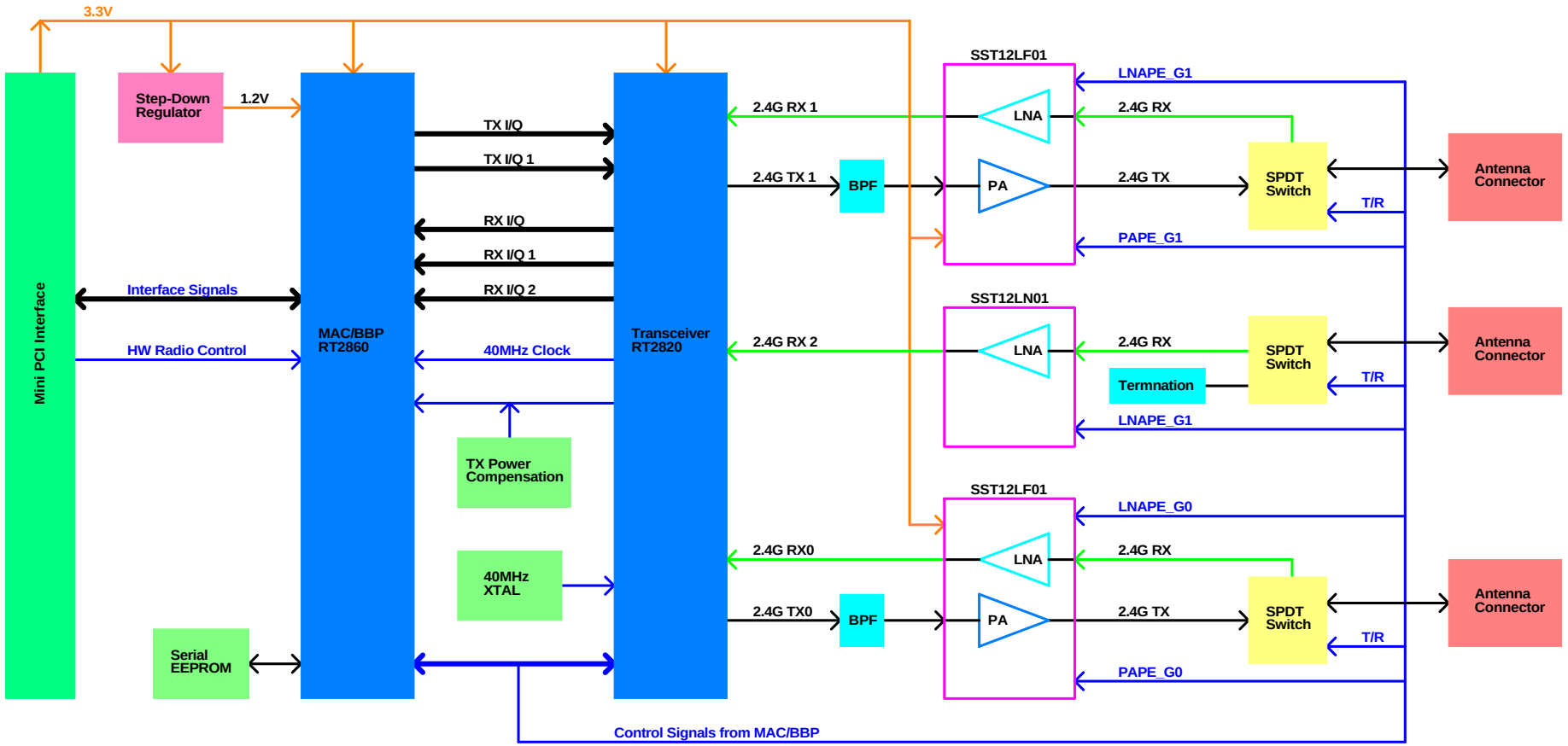

RALINK TECHNOLOGY, CORP.

Title	Block Diagram - 11n 2.4GHz Mini PCI 2T3R	
Size C	Document Number Mini PCI RT2860+RT2820	Rev 1.2
Date: Wednesday, November 15, 2006	Sheet 9 of 9	