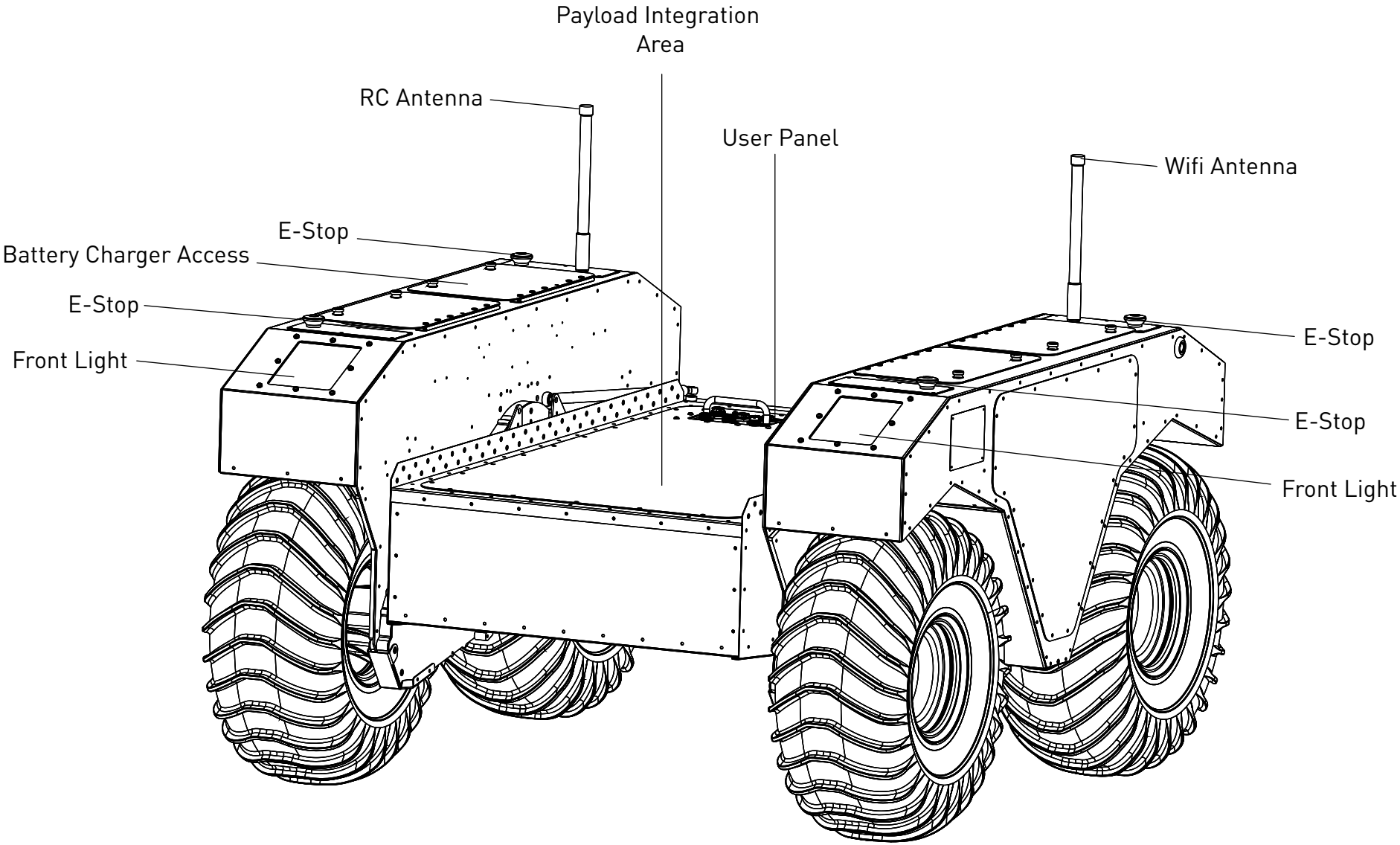
Payload Integration Area
RC Antenna
User Panel
Wifi Antenna
E-Stop
Battery Charger Access
E-Stop
Front Light
E-Stop
E-Stop
Front Light