Washington Road Usage Charge Pilot

Information School Capstone ’17

Assignment #3

29 February 2017

Dylan Babbs
Jackson Brown
Jack Fox
Nick Nordale
Ishan Saksena

Agenda

I. Project Scope, Team, Schedule

II. Project Status & Research Updates

III. Solution Selection

IV. Prototypes & State Diagrams

V. Appendix

I. Project Scope, Team & Schedule

Team Roles

Dylan Babbs

Role
Product Manager

Assigned
POC w/ sponsor
Research
Prototyping & ideation

Jackson Brown

Role
Project Manager
Software Engineer

Assigned
UX design & research
Front-end development
Data visualization & engineering

Jack Fox

Role
Software Engineer
Analyst

Assigned
Back-end development
PostGIS development

Nick Nordale

Role
Software Engineer

Assigned
Back-end development
Infrastructure mgmt
System admin

Ishan Saksena

Role
Software Engineer

Assigned
App development
Onboard diagnostics integration

*22 week assumption

Project Plan

Item	Weeks*	Description
Project Selection	1-5	Brainstorm, accept WARUC project
Core Research	5-13	Interviews, research to determine best tracking method
Product Definition	7-13	Define product scope from conducted research
Rapid Prototyping	**7-13**	**Build and test low fidelity prototypes**
Technical Planning	13-15	Technical architecture and implementation research
Design	13-18	UX / UI
Engineering	13-19	Let's build
Testing	16-19	Bug and user testing
Launch	22	Present at Capstone event & to Challenge Seattle sponsor
Support	22	Continuous support following Capstone II

Project Timeline (cont.)

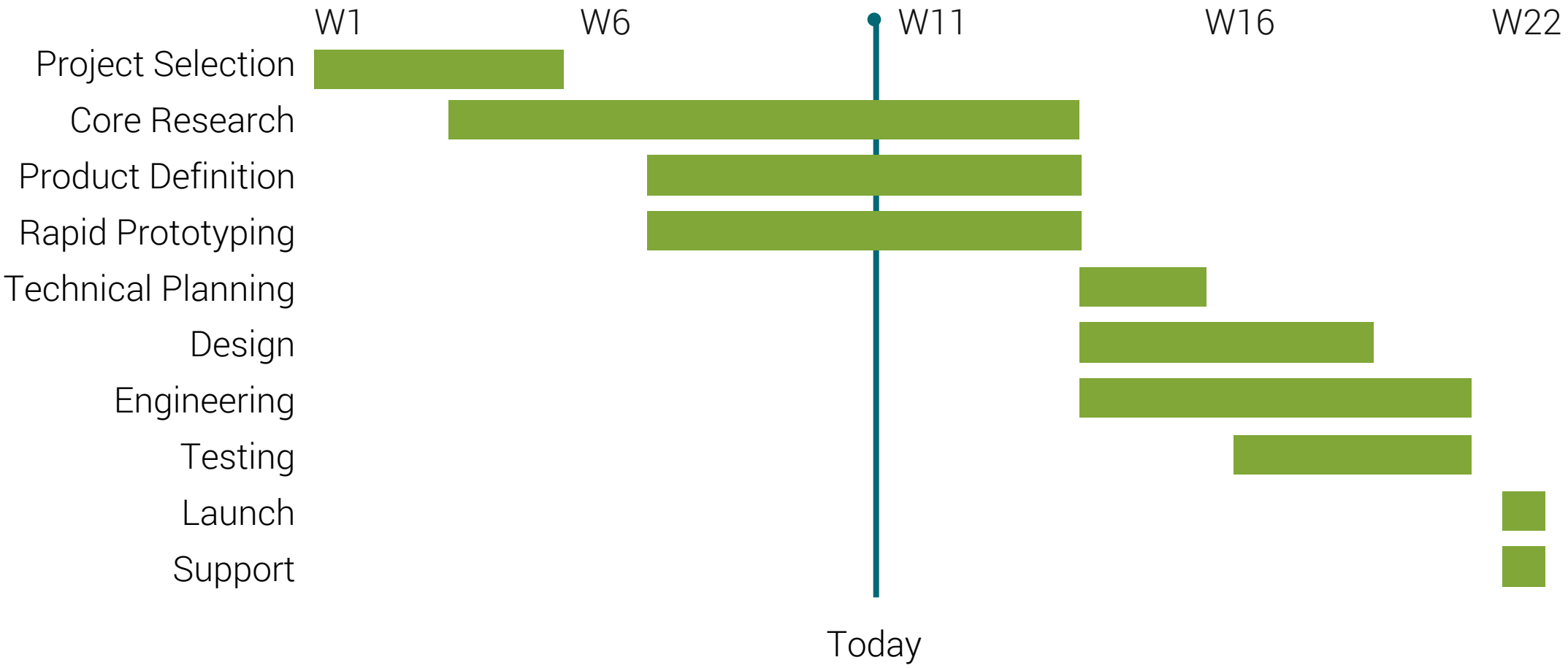

II. Project Status & Research Updates

OBD-II port purchase

- Purchased Foseal iOS WiFi OBD-II scanner
- Setup and connection is a simple process; took less than one minute to begin working
- When connected to WiFi, user unable to use cellular data -> no access to streaming music or mapping

- **Area for further research**: Since WiFi connection limits ability to connect to cellular data, will we still be able to access GPS data to calculate location? Or must we grab distance from OBD-II velocity?

iOS OBD-II Scanner

Data received from OBD-II port

Some of the data fields received from the live streaming OBD-II during exploration:

- Fuel Type
- Fuel Economy
- Command Equivalence Ratio
- Ambient Air Temperature
- Accelerator Position
- Oxygen Sensors
- Fuel Level
- Vapor Pressure
- Barometric Pressure
- Engine RPM
- Speed
- Throttle Position
- Engine Load
- DTC Status
- Fuel System Status
- Timing Advance
- Drive Cycle Status

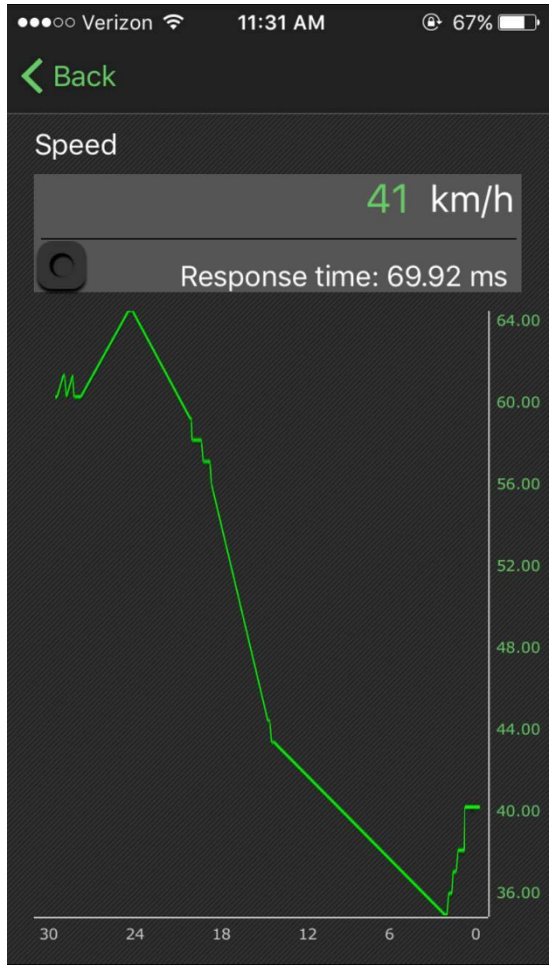

Screenshot from "OBD Doctor" iOS app, showing velocity of vehicle

Meetings with other departmental teams

- Met with Electrical Engineering and HCDE2 teams working on same WARUC project on 2/22/17
- No contact with team HCDE1 team
- EE team to build Android application that calculates distance using velocity from OBD-II port
- HCDE2 to focus on user research and “public acceptance”; will conduct research into determining the most acceptable approach for the application. Will not build prototype

- **EE contact**: Amanda Tran -- trana19@uw.edu
- **HCDE2 team lead**: Alex Gilbert -- agilbe@uw.edu

Research Update: Unknowns Answered (1 of 5)

How accurate is deriving distance from the [odometer's] velocity?

According to our technical expert, this method is more accurate for measure the vehicle's distance traveled than either the vehicle's mileage odometer, or through GPS mapping.

- Although owners strongly believe the odometer is an accurate measurement of vehicle miles traveled, currently there's no federal standard for odometer accuracy. A few automakers have been sued for inaccurate odometer reporting (up to 5% variation), as the mileage reported by the odometer is used for determining the expiration of a vehicle warranty.
- GPS is not always an accurate representation either. For example, miles could be over or under-reported when the signals change, or the GPS signal is temporarily obstructed. At the very small measures, GPS with map-matching may not capture mileage from lane changes, off-road or off-map deviations, etc.
- For purposes of assessing a RUC, both odometer and GPS are treated as acceptable measures of miles driven.

Research Update: Unknowns Answered (2 of 5)

Which Model Year vehicles have OBD ports?

Although the OBDII standards were not finalized by the regulatory agencies until 2006, all vehicles sold since 1996 have an OBD port that is capable of providing data required to calculate a RUC.

Can ODD-II devices store data?

Yes. It might be worth researching the ability of the smartphone to store mileage data, rather than storing it on the OBDII device. Possible collaboration with a firm from Norway [Q-Free, https://www.q-free.com] reported they were working on an app that would keep road charging information on the phone itself (I believe they were considering tolls, not RUC).

Research Update: Unknowns Answered (3 of 5)

How often is mileage data transmitted to the cloud?

In the recent California pilot, the transmission of data is 1x per day. This is not a requirement, since mileage is billed to RUC participants only once every month (or quarter).

- As the team considers ways to build an app that users will like, having mileage data available at least daily (if not in real-time) might be a desirable feature that can spawn other interesting features. For example, OBDII device providers Azuga, IMS and Automatic all have interesting features to provide drivers so that the data they are collecting for their clients (government RUC and tolling programs, insurance companies wanting to verify mileage) is not the only reason for drivers to use their devices.

Research Update: Unknowns Answered (4 of 5)

How many cars are equipped with Bluetooth technology?

Market forecasts from 2010 indicate that about 90% of new vehicles would be Bluetooth enabled by 2016. The team might want to research this question further. However, in reality, dependability of Bluetooth in automobiles has been poor. If consumers are frustrated by the poor performance, relying on Bluetooth as a means of critical vehicle authentication for RUC purposes could be an issue. More info.

- For the pilot project (and development of this app), we are not concerned about wide availability of Bluetooth or USB, since the smartphone approach is still in proof-of-concept phase. If the team uses Bluetooth or USB as a means of RUC vehicle authentication, we will just need to point out that the system's functionality will depend upon the availability and reliability of the drivers' in-vehicle Bluetooth capabilities.

Research Update: Unknowns Answered (5 of 5)

How many cars are equipped with USB inputs?

The number has increased from 3.3 million in vehicles sold in 2005, to a projected 16.7 million in vehicles sold MY 2022.

Can vehicles be authenticated via the USB port?

Still unknown – will continue to research

Platform Considerations

- Project to be built with **iOS/Swift**

Why?

- Team has experience with iOS development
- EE team is already building Android
- iOS is second most popular mobile OS in the United States

Persona # 1 (of 3)

Michael Cornell

Age	24
Education	Bachelors
Marital	Single
Location	Seattle
Car	2001 Ford Escape

- Michael is a recent graduate of the University of Washington working at Microsoft in Redmond, WA
- Living in Capitol Hill, Michael commutes to the eastside 5 days a week across the 520 to get to work
- Michael drives a white 2001 Ford Escape, which averages 25-30 mile per gallon
- One day at work, Michael sees a senior executive at the company parking lot driving a Tesla and realizes that he doesn't have to pay the gas tax Michael has to when he goes to the pump
- Michael is unhappy about this and wants the WA state government to enact a fair tax across all citizens (regardless of car type) to improve roads

Persona # 2 (of 3)

Jaclyn Smith

Age	24
Education	Associates
Marital	Single
Location	Tacoma
Car	2006 Acura TL

- Jaclyn is an office manager at a Tacoma medical clinic
- As an avid skier, Jaclyn travels to Stevens Pass every weekend during the winter season
- Similar to Michael, Jaclyn is frustrated by the unfair gas tax she has to pay with her 20 mpg Acura TL compared to fuel efficient vehicles
- Jaclyn heard about the WARUC pilot program through the the KING5 daily news and is eager to volunteer for the program because she wants to make a difference
- Jaclyn purchased a brand-new iPhone 7 two months, and would like to sign up for “mobile-only GPS” reporting option available in the program

Persona # 3 (of 3)

John Lent

Age	56
Education	MBA
Marital	Married
Location	Kirkland
Car	BMW i8

- John is a senior director at the Bill & Melinda Gates Foundation, commuting to Seattle five days a week from Kirkland
- At work, John focuses on public policy issues around the environment, and is passionate about transportation infrastructure in WA state
- John has noticed the continuing lack of funding for WA roads due to the unbalanced gas tax and wants to take part in the WARUC pilot program
- John's navy blue BMW i8 has an OBD-II port, and is interested in leveraging this port during the pilot program

III. Solution Selection

Evaluation of options

1. OBD-II & mobile app to track miles through **velocity output**
2. OBD-II & mobile app to verify user presence in vehicle (**Bluetooth/WIFI**)
3. Mobile app with car computer **Bluetooth** verification
4. Mobile app with car computer **USB** verification
5. Mobile app & **algorithm** to determine public road trips
6. Odometer **photo** tracking

1. OBD-II & App Using Velocity Output

About

- Requires Bluetooth/WIFI hardware OBD-II dongle to be placed in car
- Dongle collects live streaming **velocity** data from OBD-II port and sends to mobile device
- Mobile application derives distance from time logged and vehicle's velocity
- User's location is only pinged in infrequent increments to ensure user is still within WA state lines

Question: How accurate is deriving distance from the odometer's velocity?

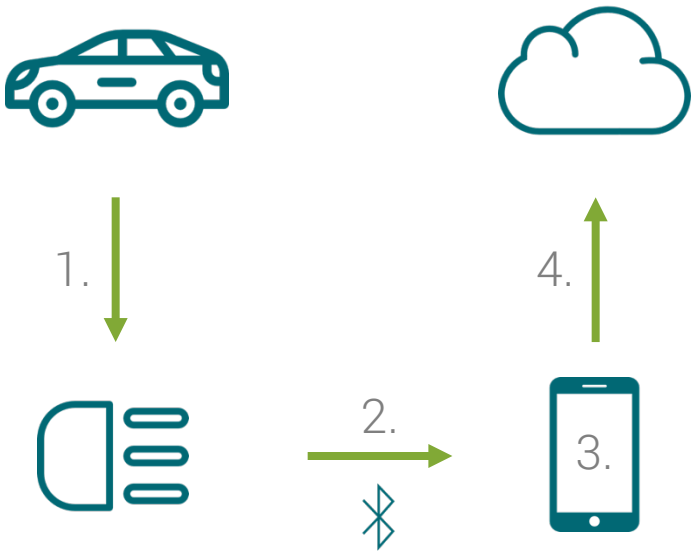

1. Vehicles live streams velocity data to OBD-II
2. OBD-II sends data to mobile via Bluetooth
3. Mobile derives distance via velocity and time
4. Distance is reported to WA state

1. OBD-II & App Using Velocity Output

Cost-Benefit Analysis & Criteria Evaluation

Strengths

- Location is not being tracked at all times
- Minimal battery usage and computation required from mobile device
- All cars after 2006 have OBD-II ports (cars prior to 1996 have OBD-I)

Weaknesses

- Inability to determine private road usage
- Can accurate distance be determined from the vehicle's velocity by time. IE: is data being fed to us at an accurate enough rate?
- Hardware component required
- WIFI only for iOS devices– **See Appendix II**

Criteria Scoring

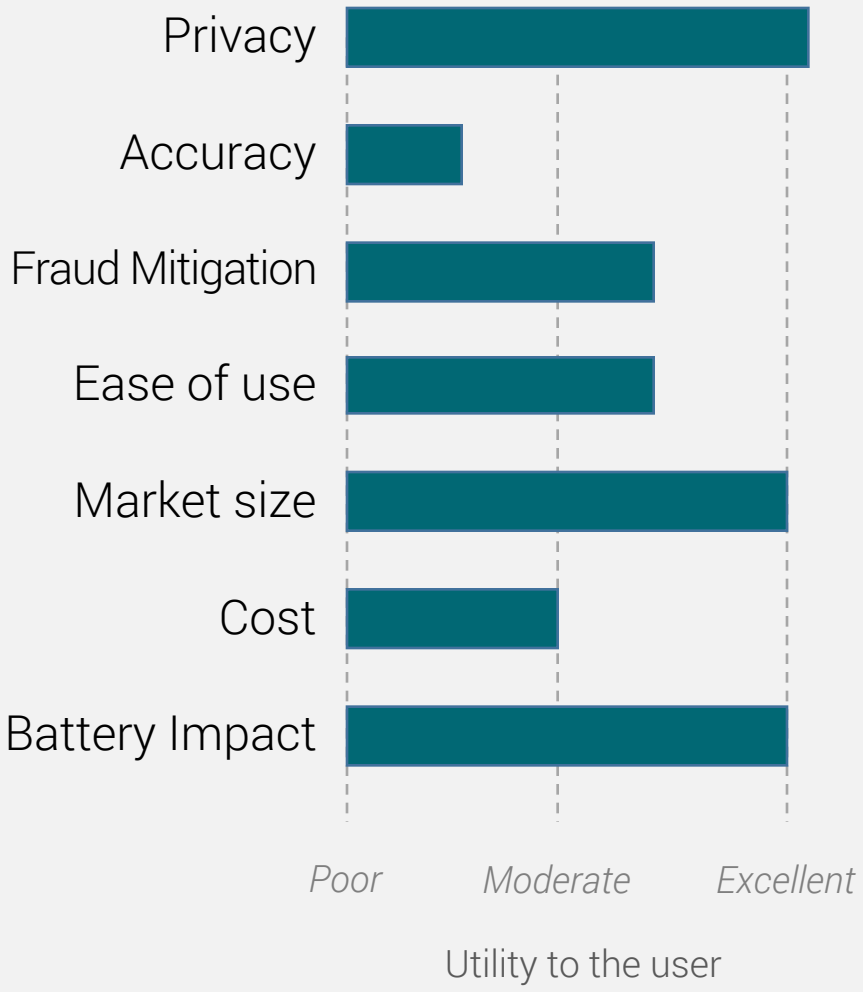

2. OBD-II & App to Verify User Presence

About

- Place an OBD-II Bluetooth/WIFI device in the user's vehicle to verify the user is driving
- When the user's phone detects a Bluetooth/WIFI signal matching the specified ID within a range (noting the phone is within range to the car), location will begin being tracked
- Helps mitigate the possibility of false tracking when the user is on a bus or traveling in a similar pattern to driving a car

1. Mobile enters range of Bluetooth/WIFI emitting OBD-II
2. Mobile confirms pair with OBD-II
3. Mobile calculates distance through GPS
4. Distance is reported to WA state

2. OBD-II & App to Verify User Presence

Cost-Benefit Analysis & Criteria Evaluation

Strengths

- Heavy computational load and battery drainage from mobile device
- Only tracking user's location when they come in range of the OBD-II dongle, results in tracking location only when the user is driving
- Accounts for public/private road usage

Weaknesses

- User can spoof by turning off Bluetooth/WIFI
- Hardware component required

Criteria Scoring

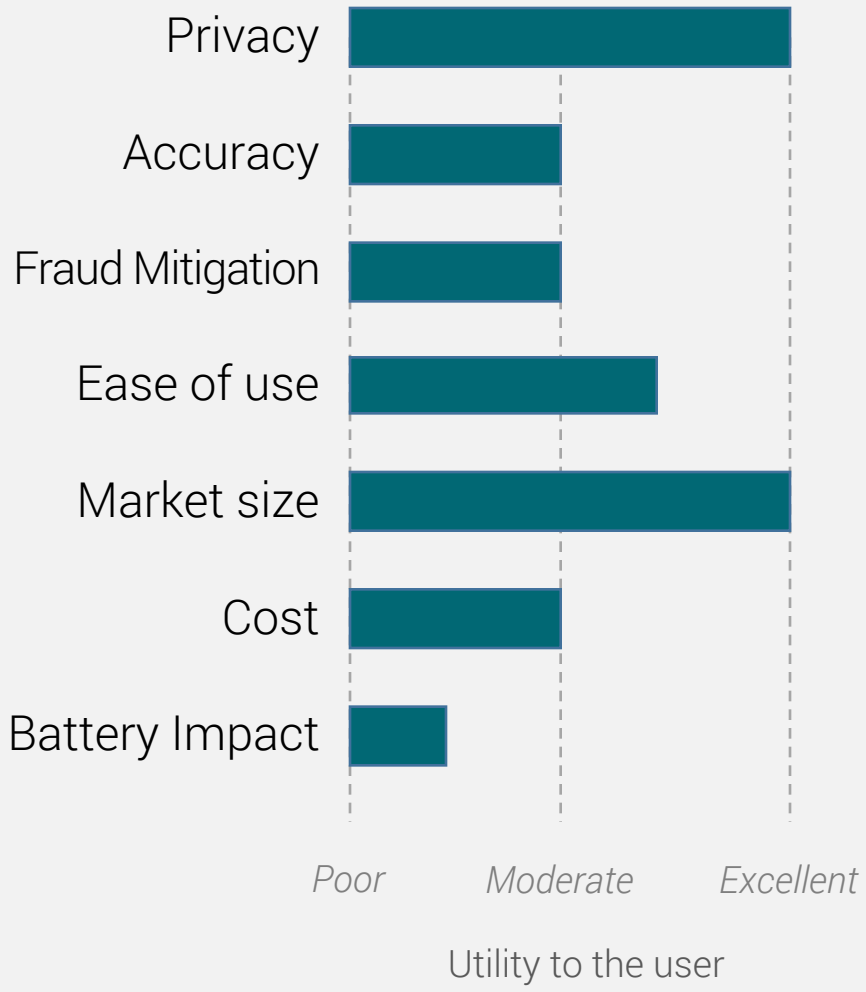

3. App with Car Bluetooth Verification

About

- Perform all distance calculations through mobile device
- Verify user is in their car through mobile to car computer Bluetooth connectivity
- Don't track location until user is connected (or within range) to Bluetooth

- **Question:** Market size of cars with Bluetooth capability?
- **Question:** Is it okay to design for this population size?

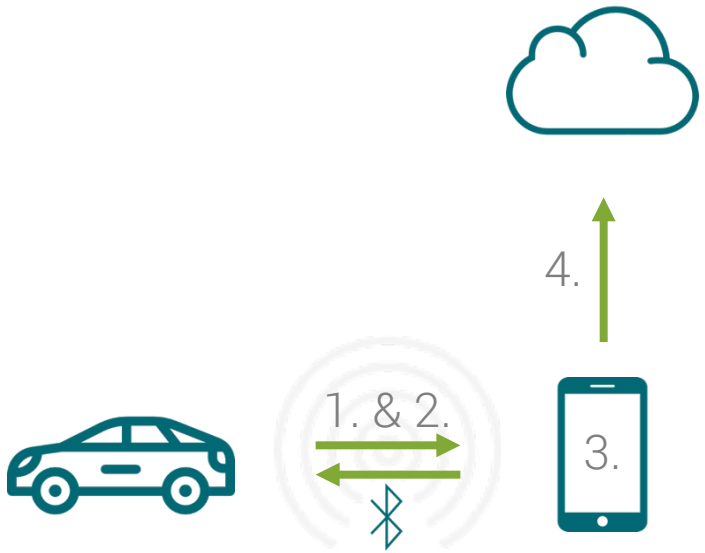

1. Mobile enters range of Bluetooth emitting vehicle
2. Mobile confirms pair with vehicle
3. Mobile calculates distance through GPS
4. Distance is reported to WA state

3. App with Car Bluetooth Verification

Cost-Benefit Analysis & Criteria Evaluation

Strengths

- No location tracking until user is connected to Bluetooth

Weaknesses

- Only available to users with Bluetooth cars
- Ability to avoid/spoof tracking by turning off Bluetooth

Criteria Scoring

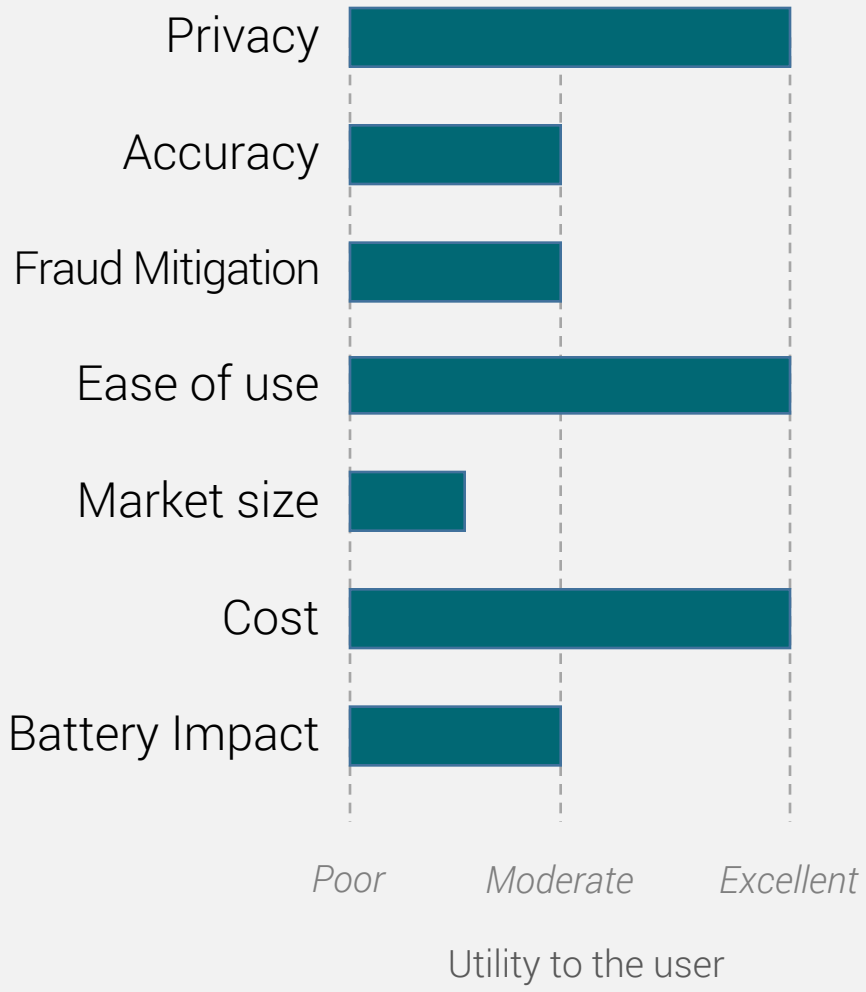

4. App with Car USB Verification

About

- Identical to previous option, but verify through car's USB cord connection
- Phone gets charged through this process, making up for GPS battery strain

- **Question:** Market size of cars with USB capability?
- **Unknown:** Can we uniquely identify vehicles through information available in USB ports?

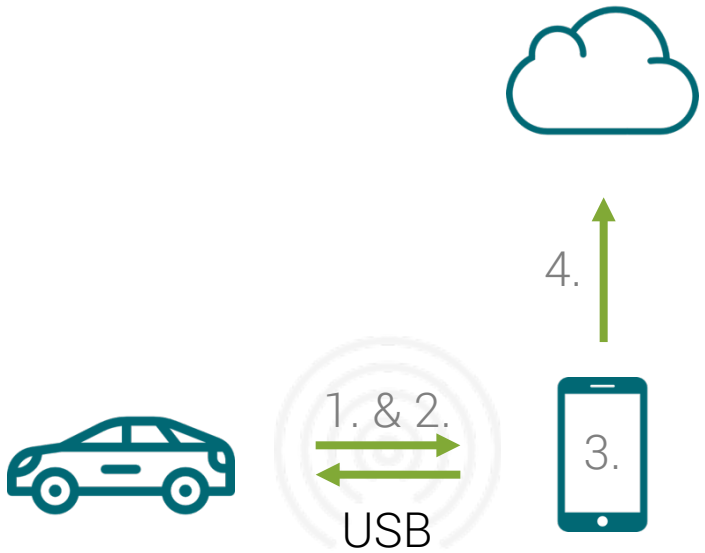

1. User enters vehicle and plugs in mobile device
2. Mobile confirms pair with vehicle and recognizes vehicle
3. Mobile calculates distance through GPS
4. Distance is reported to WA state

4. App with Car USB Verification

Cost-Benefit Analysis & Criteria Evaluation

Strengths

- No location tracking until user is connected to Bluetooth
- Charges the phone, reducing battery strain

Weaknesses

- Only available to users with USB port cars
- Ability to avoid/spoof tracking by not turning on USB

Criteria Scoring

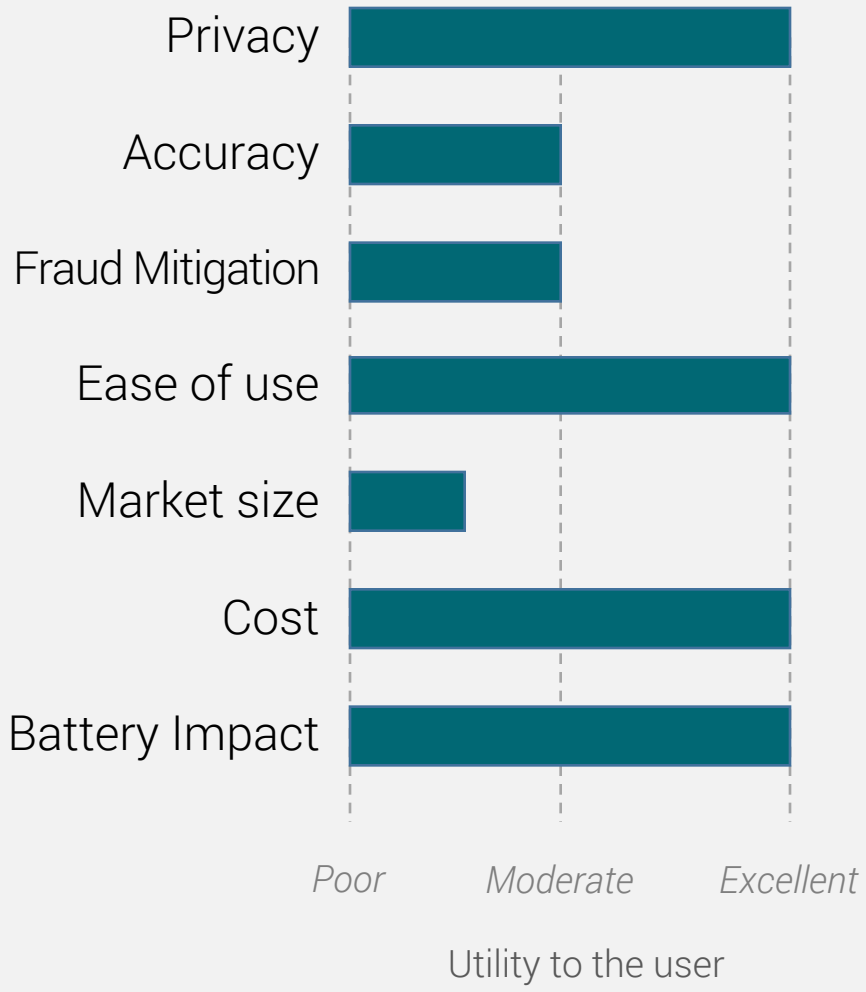

5. Post-trip algorithmic analysis

About

- A mobile application that is constantly tracking user's location
- Location is taken in infrequent increments; increments are increased when movement is detected
- Algorithm then determines automobile trips based upon speed, time, other factors
- Based upon MileIQ--used by IRS, so meets some level of government quality

- **Unknown:** Our ability to create such an algorithm

1. User drives as they normally would
2. Mobile devices tracks location and algorithmically determines trips post-drive
3. Distance is reported to WA state

5. Post-trip algorithmic analysis

Cost-Benefit Analysis & Criteria Evaluation

Strengths

- No additional hardware or verification steps required
- Expensive on battery and memory operations

Weaknesses

- User's location is always being tracked
- Unknown accuracy level of algorithm

Criteria Scoring

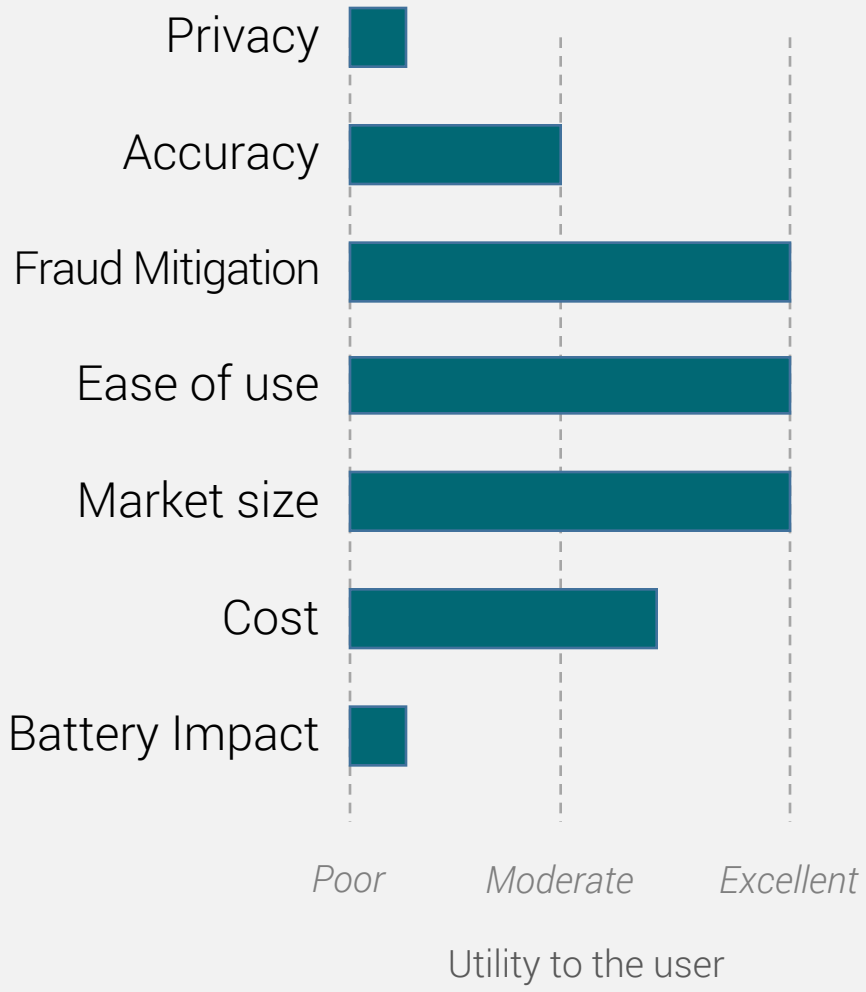

6. Odometer Photo Tracking

About

- To be used as a backup/combination to any of the previous methods
- In the event location cannot be collected, user will be notified and prompted to take a photo of the odometer

- **Question:** More info on this startup/can we arrange a call?

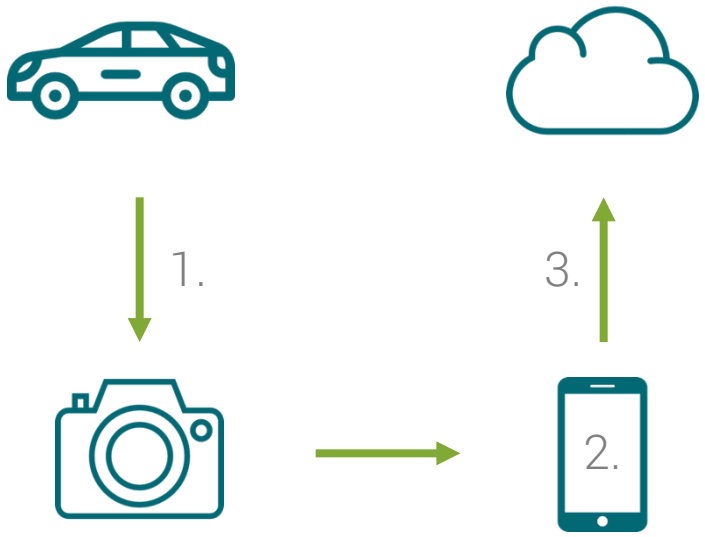

1. User takes photo of odometer using mobile camera
2. Mobile adds distance calculation to aggregate sum
3. Distance is reported to WA state

Evaluation of Options

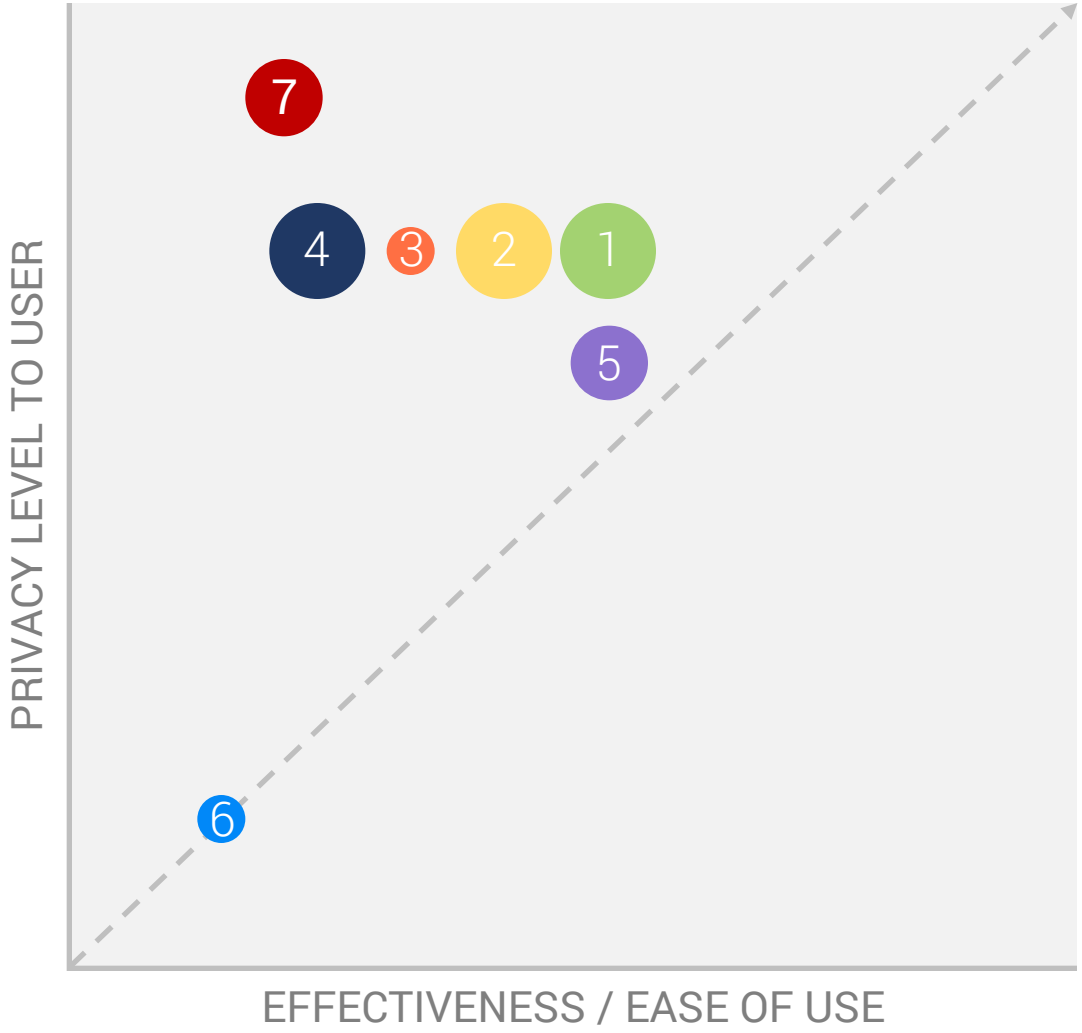

1. OBD-II & App to Verify User Presence
2. App with Car Bluetooth Verification
3. App with Car USB Verification
4. App with On/Off toggle **(New)**
5. OBD-II & App Using Velocity Output
6. Post-trip algorithmic analysis
7. Odometer **photo** tracking

Ability to implement

IV. Prototypes & State Diagrams

User Experience Overview

Application View:	Items
• Main Tracking	Tracking Off, Tracking On
• Trip History	Individual Trip Summary
• Settings	Units, Tracking Options, Payment
• Profile	Account Information, Vehicle Management
• Help	Documentation

User Experience Flow

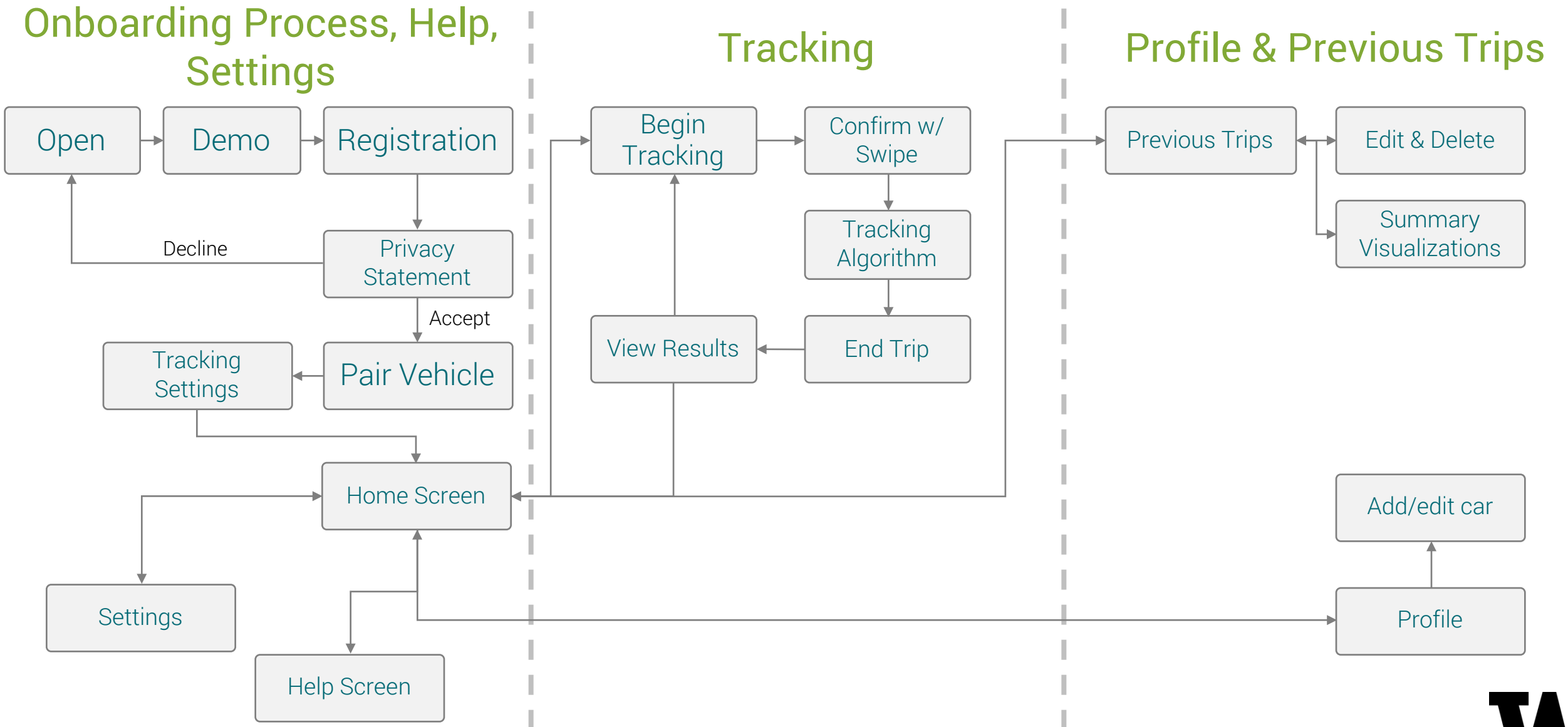

Main Screen

Tracking OFF

- The start screen on app following onboarding process
- Blue = tracking is OFF
- Swipe up to begin tracking
- Paired vehicle and connection status widgets
- Hamburger menu to lead to other options
- "Send" icon leads to connection details; "i" icon leads to help

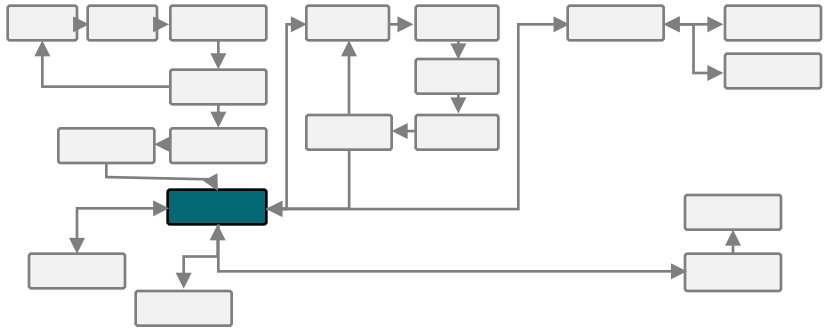

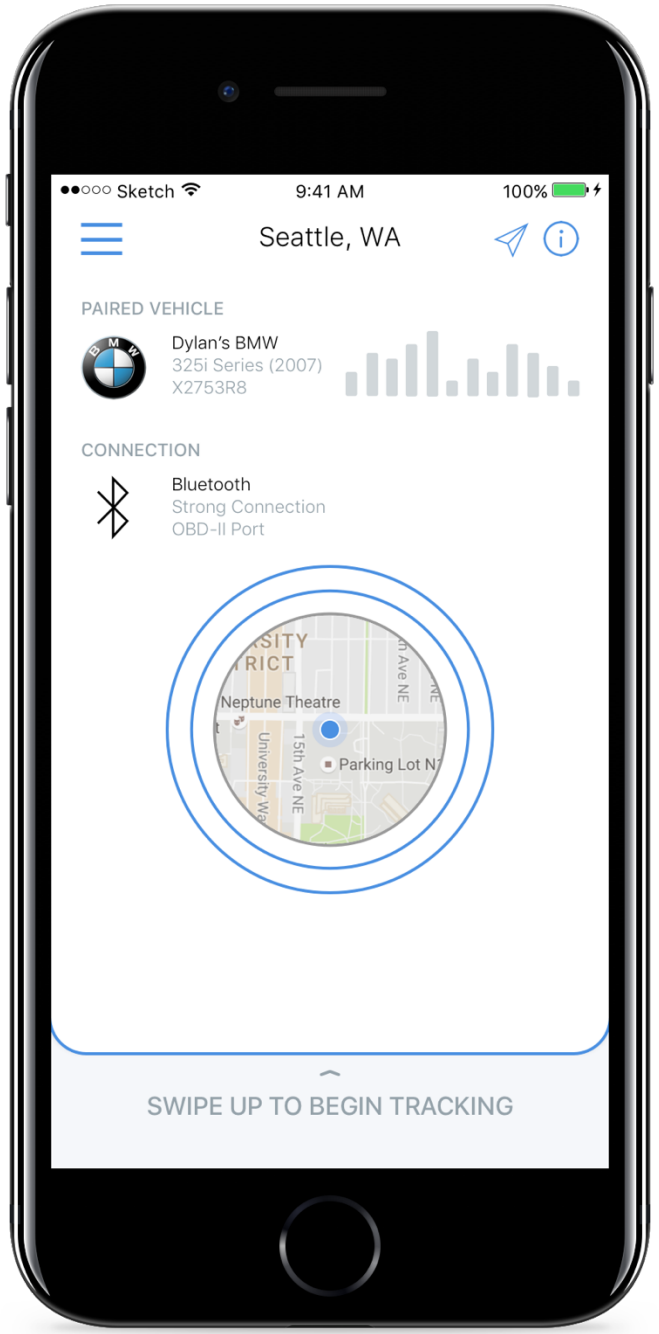

Main Screen

Tracking ON

- Bottom bar is “swiped up”; tracking is active
- Green = tracking is ON
- Distance, time, map indicators available during tracking
- Swipe down to end tracking

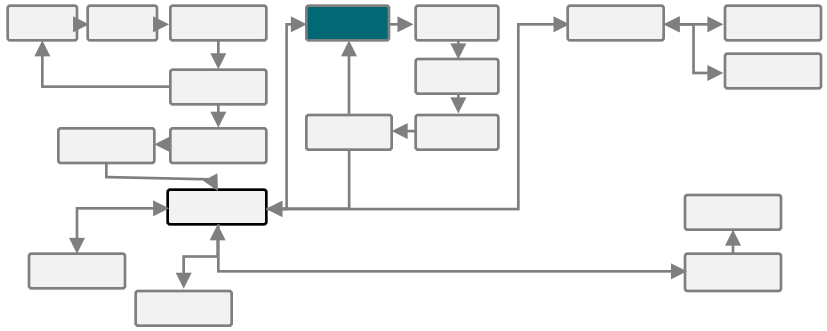

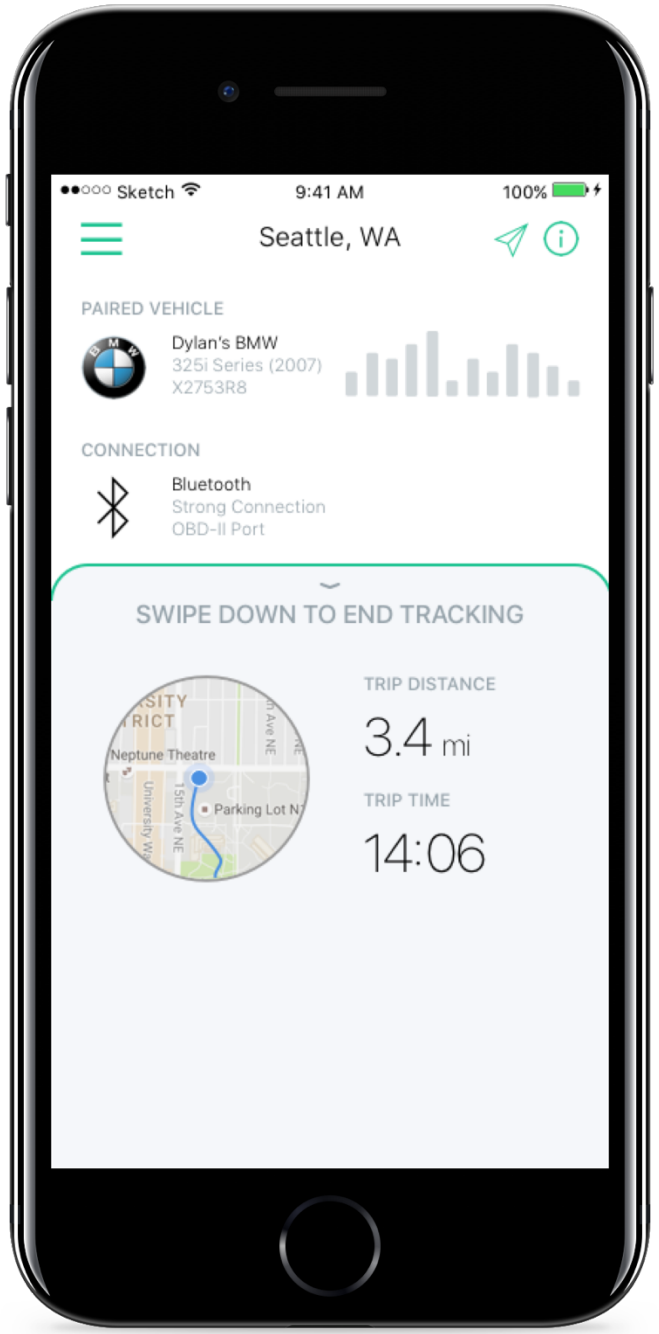

Navigation Menu

Tracking ON or OFF

- Profile picture for personalization
- Monthly distance and money saved aggregates
- Navigation to Trip History, Settings, Profile, and Help

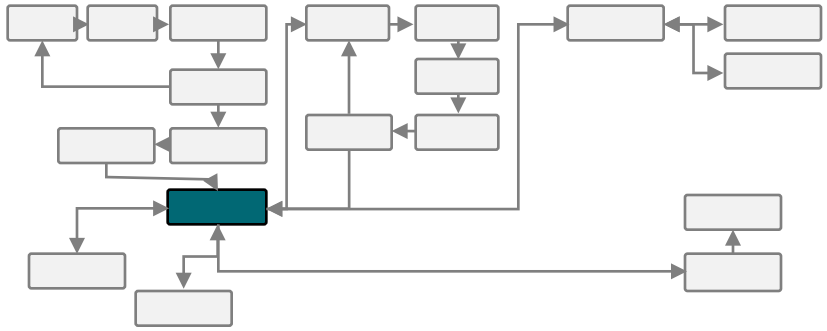

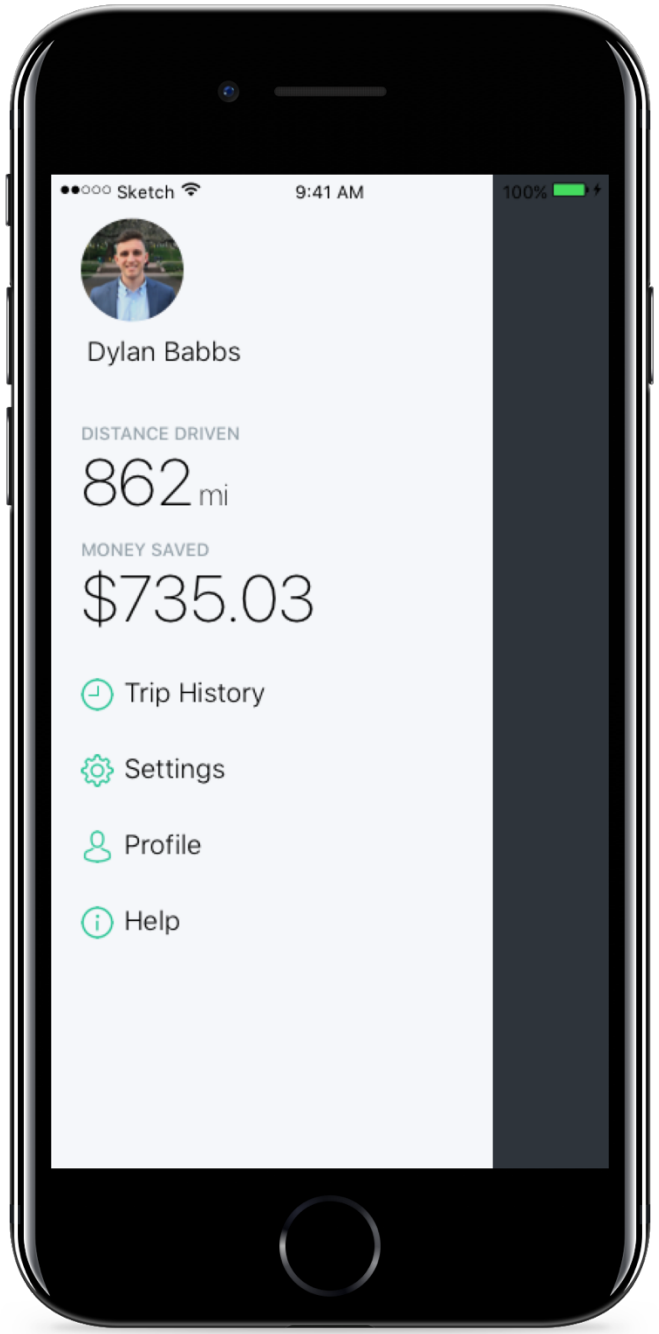

User Profile

Tracking ON or OFF

- Profile picture for personalization
- Vehicle Management
  - Ability to edit and remove
- Activity heat map (ability to remove for privacy reasons)

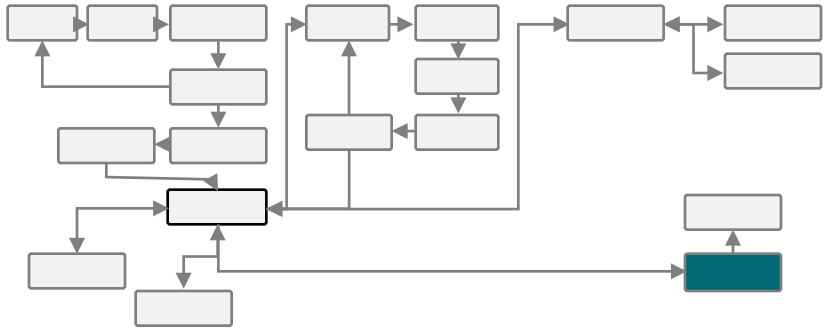

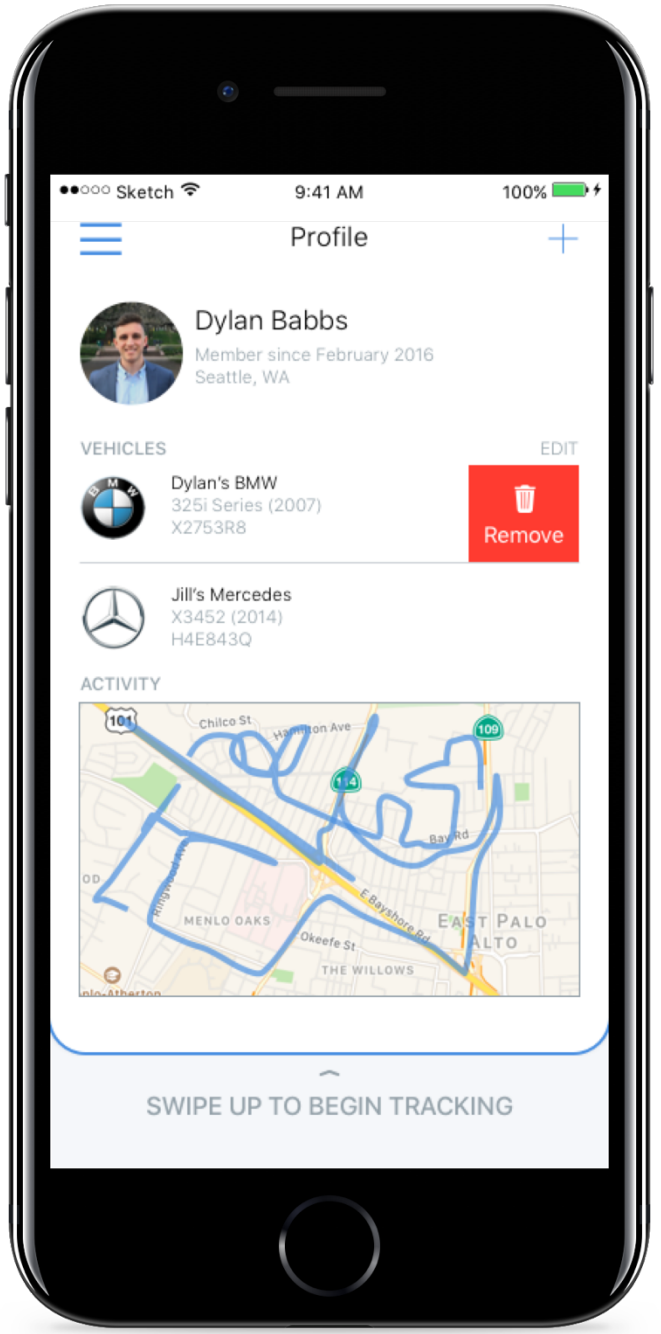

User Profile: Adding a New Vehicle

Tracking OFF

- Left screen:
  - New vehicle text entry
- Right screen:
  - Automated camera license plate grab

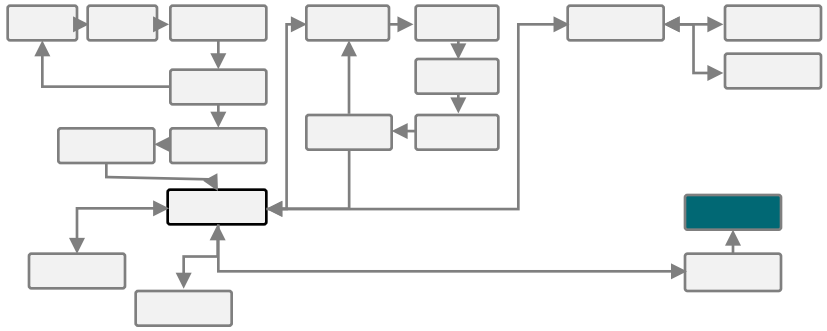

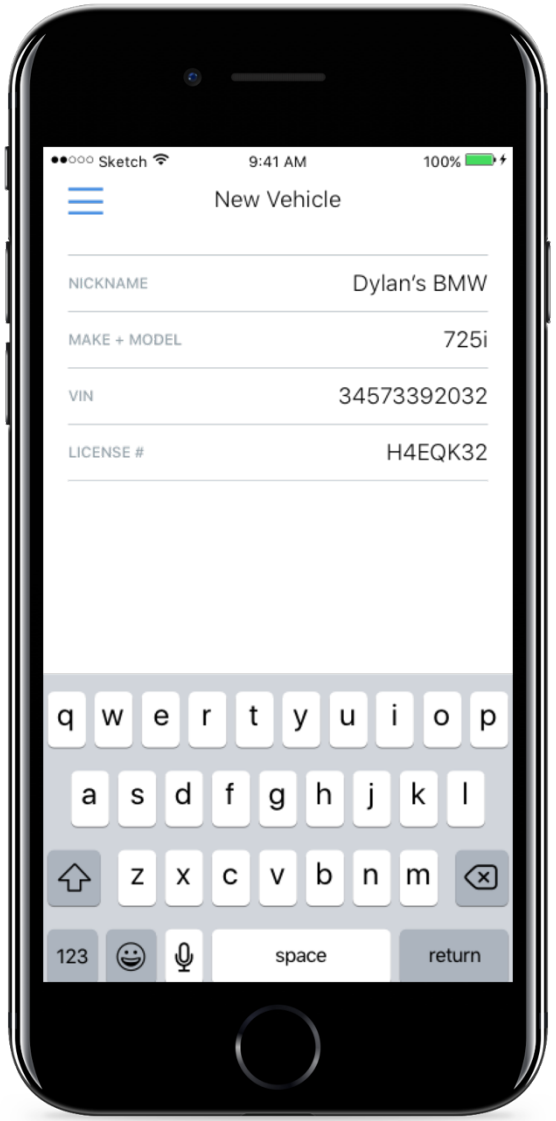

Trip History

Tracking ON or OFF

- Map thumbnail, date, trip time, trip distance, money saved
- Ability to delete individual trips or completely disable this screen

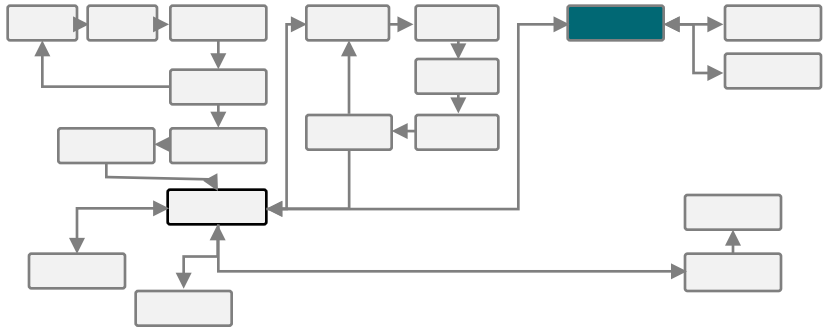

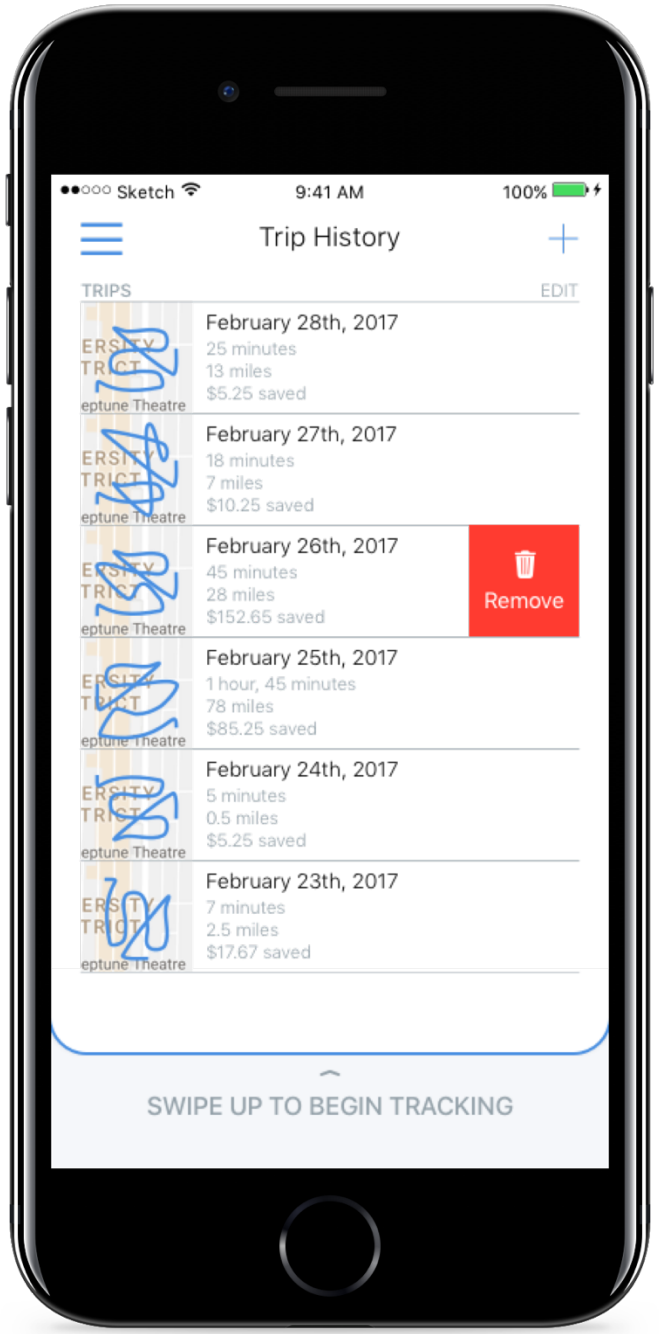

Miscellaneous Features

Tracking OFF

- Left screen:
  - Touch ID for privacy concerns
- Right screen:
  - Reminder to user to begin tracking if device senses movement on roads

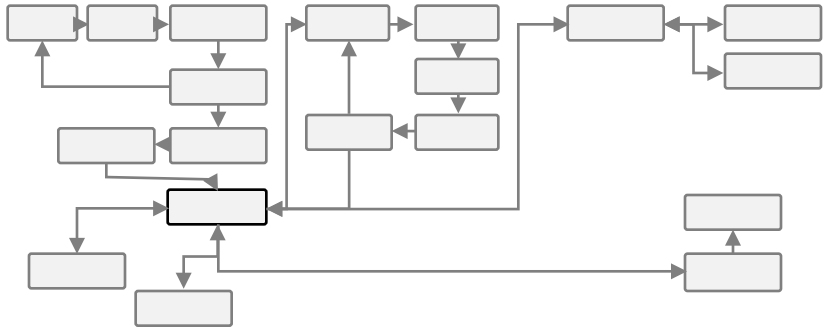

V. Appendix

Appendix I: Mobile Phone Usage

- Android market share: **52.7%**
- Apple: **43.9%**
- Smartphone US Market: **79.3%**
- WA State pop: 7M * .79 = **5.53M drivers w/ smartphone**

Appendix II: WIFI only on iOS OBD-II drawback

- OBD-II Advantages:
  - Available to 100% of drivers in WA state
  - Cheap hardware component
- Disadvantages:
  - Requires hardware component
  - **iOS cannot connect via Bluetooth (WIFI only):** https://www.lifewire.com/elm327-iphone-adapter-doesnt-work-534643

- **Question:** how does WIFI connection with iOS affect normal phone operations? Can I still browse the web while connected to OBD-II WIFI network?
- Alternative to Bluetooth/WIFI: lightning/USB cord?

Appendix III: Open-source OBD-II Hardware

- Lots on Amazon

SKENOY
- Bluetooth for Android **$13.29**
- WIFI for iOS **$18.98**

Purchased

VeePeak
- Bluetooth for Android **$11.99**
- WIFI for iOS **$16.99**

Panlong
- Bluetooth for Android **$12.99**
- WIFI for iOS **$16.99**