TASKS

- To define each task, Classic QUESTIONS:

Question	Meaning	Example
WHO?	Who will do the task? (the person or team responsible)	*The front-end developer*
WHAT?	What must be done? (the activity to perform)	*Design the login page*
WHEN?	When will it be done? (start and end dates)	*From March 3 to March 5*
WHERE?	Where will it take place? (the place or environment)	*At the company's office or online*
HOW MUCH?	How much work or cost? (effort, or cost estimation)	*16 man-hours , 40,000 DA*
HOW?	How will it be done? (what tools or methods, what resources)	*Using Figma and Visual Studio Code*

RESOURCES

- Staff: for each category, define hourly rate, availability, and skills.
- Means: number of resources available, their characteristics, and use for tasks.

COSTS

- Hours (for each task):

- Workload: amount of work needed to complete the task.

- Duration: time to go from 'not started' to 'finished'.

- Supplies.

WORK PACKAGES

▶ A work package is a set of similar tasks assigned to the same manager.

Task Sheet:

- Task: Title, WBS Code
- Manager: Name, OBS Code
- Duration
- Estimate
- Description: inputs, details, results.

TASK SHEET EXAMPLE

Champ	Contenu
Nom du projet	Système intelligent de gestion des rendez-vous médicaux
Tâche	Développement du module d'authentification
Code WBS	1.2.1.3
Responsable (nom)	Mme. Lounis
Code OBS	2.1
Rôle	Développeur Front-End
Durée prévue	4 jours calendaires
Temps de travail par jour	8 heures
Disponibilité	100 % (plein temps)
Charge de travail	4 j·h = 32 h·h
Taux horaire	2 000 DA/h
Coût estimé	32 × 2 000 = 64 000 DA
Entrées (Inputs)	Spécifications fonctionnelles, maquette du formulaire de connexion
Description (Travail à réaliser)	Créer l'interface de connexion (email/mot de passe), connecter le module au service d'authentification, et assurer la validation côté client.
Résultats attendus (Outputs)	Interface fonctionnelle testée, intégrée au module principal
Contraintes / Observations	Respecter les normes UX du projet et la charte graphique

PSYCHOLOGICAL ASPECTS OF PLANNING

▶ **Its existence**

- Provides a work framework
- Sets goals
- Offers a vision of the future

▶ **Its monitoring**

- Helps everyone to locate themselves
- Shows progress: dynamic
- Is motivating.

PSYCHOLOGICAL ASPECTS OF PLANNING

▶ **Be careful with deadlines!**

- Too long: demotivating ('we have time')
- Too short: demotivating ('I'll never make it')
- The goal must be achievable yet ambitious

▶ **Meeting deadlines**

- Define milestones
- Always justify any delay
- Repeated delays => loss of credibility.

PLANNING - PERT

PROJECT PLANNING TECHNIQUES

- Scope: tasks and often resources
- Goal: to determine schedules, i.e., task start and end dates
- Two approaches:

- Task planning

- Resource scheduling.

PERT - EXAMPLE OF REPRESENTATIONS

- The network: gathers all quantification assumptions (task durations, workloads, resources) and dependency/intensity relationships.

PERT NETWORK

- Definition: a method to organize, in network form, several tasks which, through their dependencies and chronology, all contribute to a final product.
- Principle: based on task relationships or independence.
- Goal: clearly define and coordinate what must be done to reach the objective on time.

PERT EXECUTION

1. Draw the sequence of tasks

2. Assign a duration to each task

3. Calculate the earliest start date for each node

4. From the final date, calculate the latest date for each node

5. Define the critical path (earliest = latest)

6. Define time margins for non-critical tasks.

PERT NETWORK

- Construction: based on the WBS
- The PERT network includes:

- Steps

- Elementary tasks or operations (activities)

- Dummy tasks.

PERT VOCABULARY

- Task
- Node
- Constraint
- Task entry condition
- Earliest date
- Latest date
- Critical path
- Float (slack)

PERT NETWORK: 2 REPRESENTATION METHODS

- Event-on-Node (AON)
- Activity-on-Arrow (AOA)

PERT ILLUSTRATION - EVENT-ON-NODE

i: Number of the task

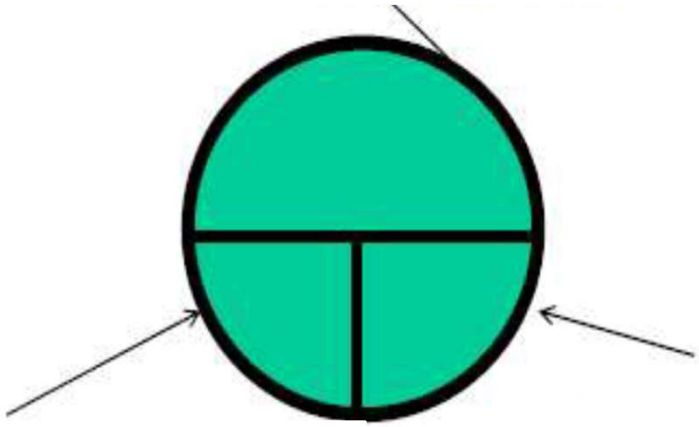

Earliest date of i

Latest date of i

PERT ILLUSTRATION - EVENT-ON-NODE

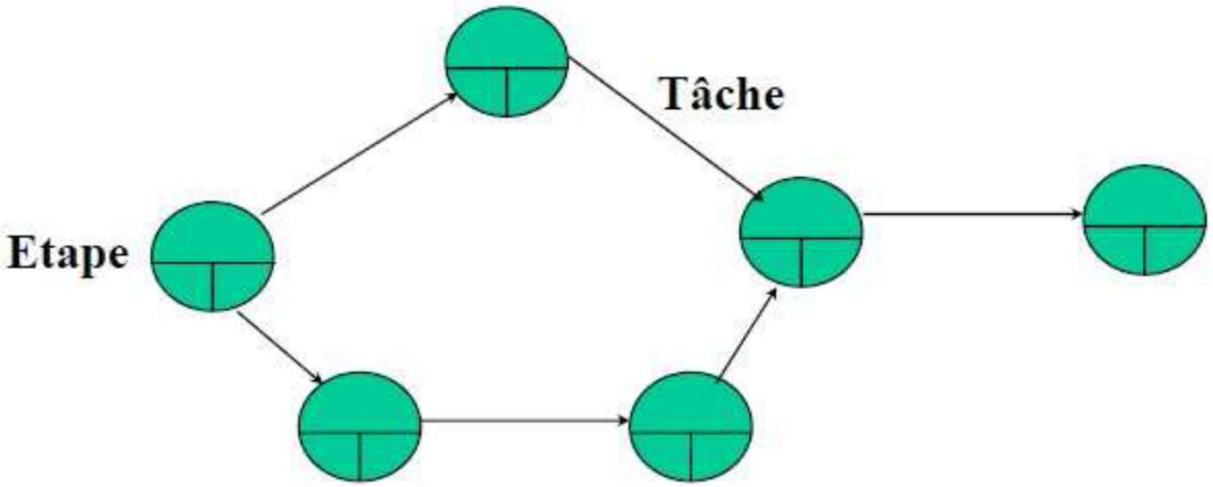

PERT ILLUSTRATION - ACTIVITY-ON-ARROW

- Task sequence diagram.
- Graphical representation called a logic network or graph.
- Tasks are shown as nodes.
- Precedence constraints are represented by arrows (ancestor → descendant).

PERT ILLUSTRATION - ACTIVITY-ON-ARROW

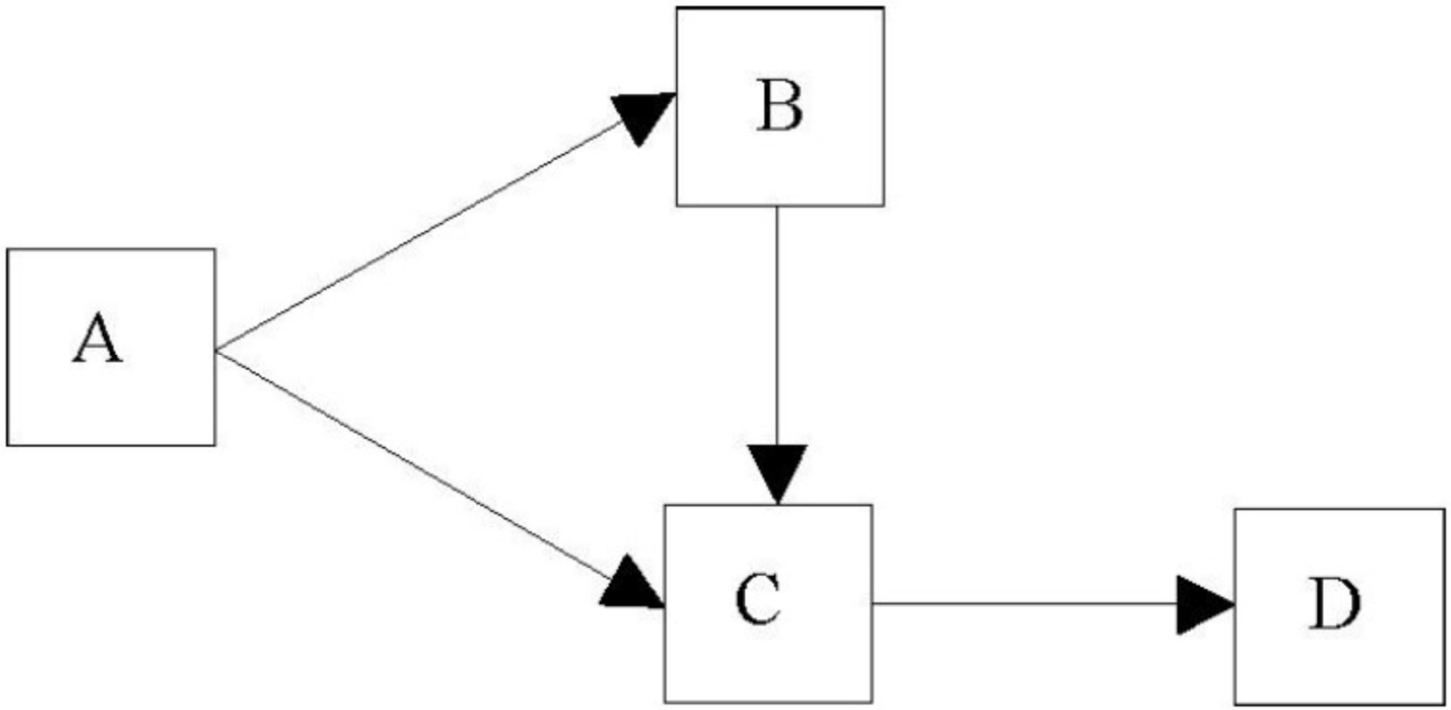

PERT DEFINITIONS - STEP

- Start or end of a task.
- End of one task = Start of next.
- Zero duration, no resource use.
- Shown graphically by a cell with earliest and latest dates (AON) or an arrow (AOA).

PERT DEFINITIONS - ELEMENTARY TASK

- Clearly defined action contributing to project completion.
- Has a duration and uses resources.
- Shown as an arrow (AOA) or a node (AON).
- Identified by a code.

NETWORK FORMALISM

- Link (or dependency): relation between two tasks represented by an arrow.
- Network (logic network): set of tasks and links shown as bars and arrows.

NETWORK FORMALISM - DELAYS

- A link can have a delay value.
- Delay: minimum time separating successor from predecessor.

NETWORK FORMALISM - DELAY EXPRESSION

- Time units: calendar days, working days, weeks, months, etc.
- Percentage of predecessor.
- Delay is always explicit.
- Oblique arrow representation does not mean delay.

NETWORK FORMALISM - LINK TYPES

- Finish-to-Start
- Start-to-Start
- Finish-to-Finish
- Start-to-Finish.

NETWORK FORMALISM - FINISH-TO-START

- Task B can start when Task A finishes.
- Most common link (about 90%).

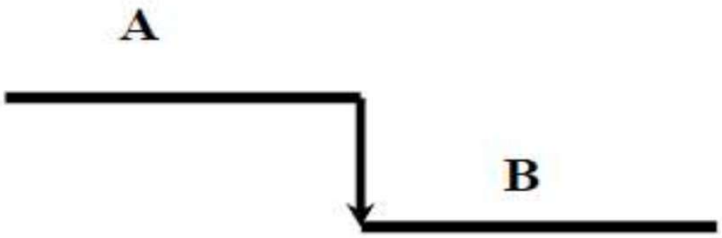

B ne peut pas débuter avant la fin de A

NETWORK FORMALISM - START-TO-START

- Task B can start when Task A starts.
- About 5% of links.

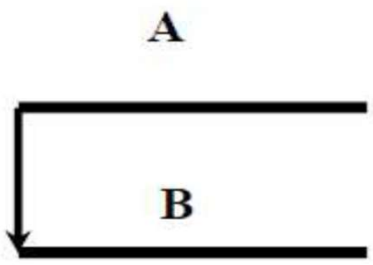

B ne peut pas débuter avant le début de A
B doit commencer quand A commence

NETWORK FORMALISM - FINISH-TO-FINISH

- Task B can finish when Task A finishes.
- As common as Start-to-Start links.

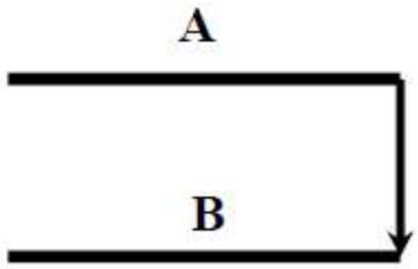

B peut terminer à la fin de A

NETWORK FORMALISM - START-TO-FINISH

- Task B can finish when Task A starts.
- Very rare link type.

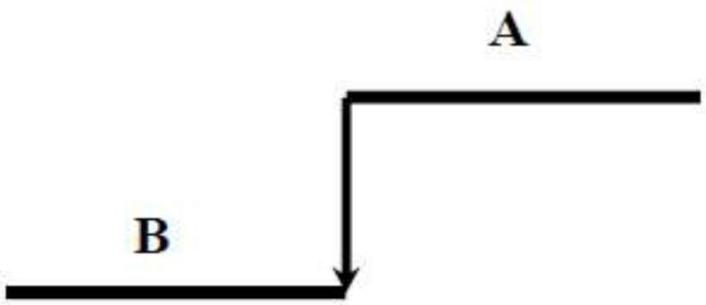

B ne peut pas finir avant le début de A

PERT VERSIONS

- PERT-Time: manages only dates
- Extensions: PERT-Workload, PERT-Cost.

PERT-TIME - EARLIEST DATES

- Found by processing the logic network from start date t0 forward.
- Principle: if the project starts at t0, when will it finish?

PERT-TIME - LATEST DATES

- Found by processing the logic network backward from final date tf.
- Principle: if the project must end at tf, when must it start?

PERT-TIME

- Critical task: task with zero float (slack), highly time-sensitive.
- Critical path: set of critical tasks.
- Critical resources: used in critical tasks.

PERT-TIME - DATE CALCULATION

- Task Ti has:

- Duration di

- Earliest start and finish ti

- Latest start and finish ti*

PERT-TIME - DATE CALCULATION

▶ Rule: If n = total number of tasks:

- Add a dummy start task T0 (duration 0)

- Add a dummy end task Tn+1 (duration 0)

- Tasks with no predecessor → T0

- Tasks with no successor → Tn+1.

PERT-TIME - EARLIEST DATES CALCULATION

1. Mark T0 with t0=0

2. Find an unmarked task whose predecessors are marked. If none, stop.

3. Mark ti = max(tj + dj) over all predecessors Tj.

4. Repeat.

PERT-TIME - LATEST DATES CALCULATION

1. Mark Tn+1 with tn+1*=tn+1

2. Find an unmarked task whose successors are marked. If none, stop.

3. Mark ti* = min(tj* - di) over all successors Tj.

4. Repeat.

PERT-TIME - CRITICAL TASKS AND PATH

- Critical task: ti = ti*
- Critical path: path from start to end containing only critical tasks.

EXAMPLE

Tâche	Durée	Antériorités
A	4	--
B	2	--
C	5	--
D	3	C
E	2	B,D
F	4	C
G	2	A
H	5	E
I	2	F
J	7	G

EXAMPLE: EARLIEST DATES (DTO)

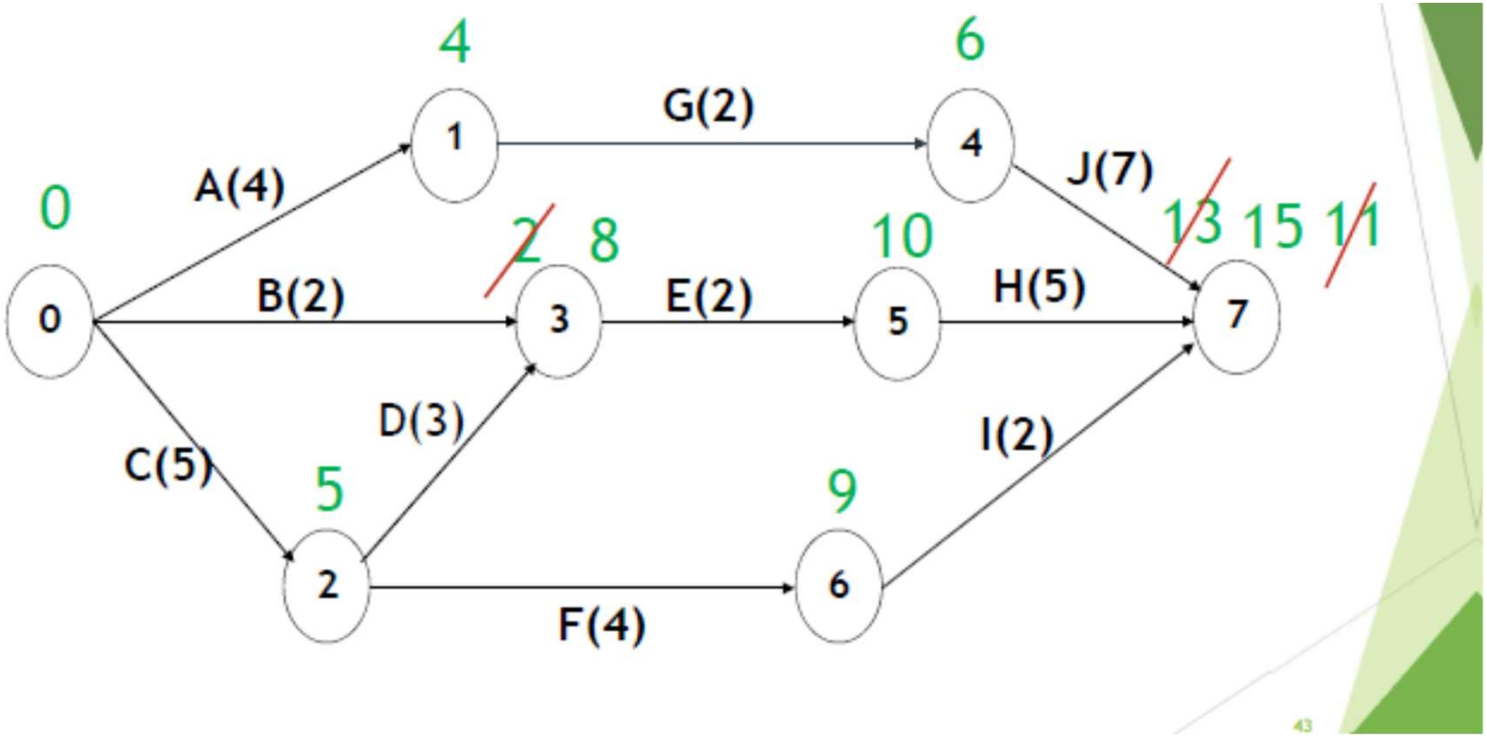

EXAMPLE: DTO (CONT'D)

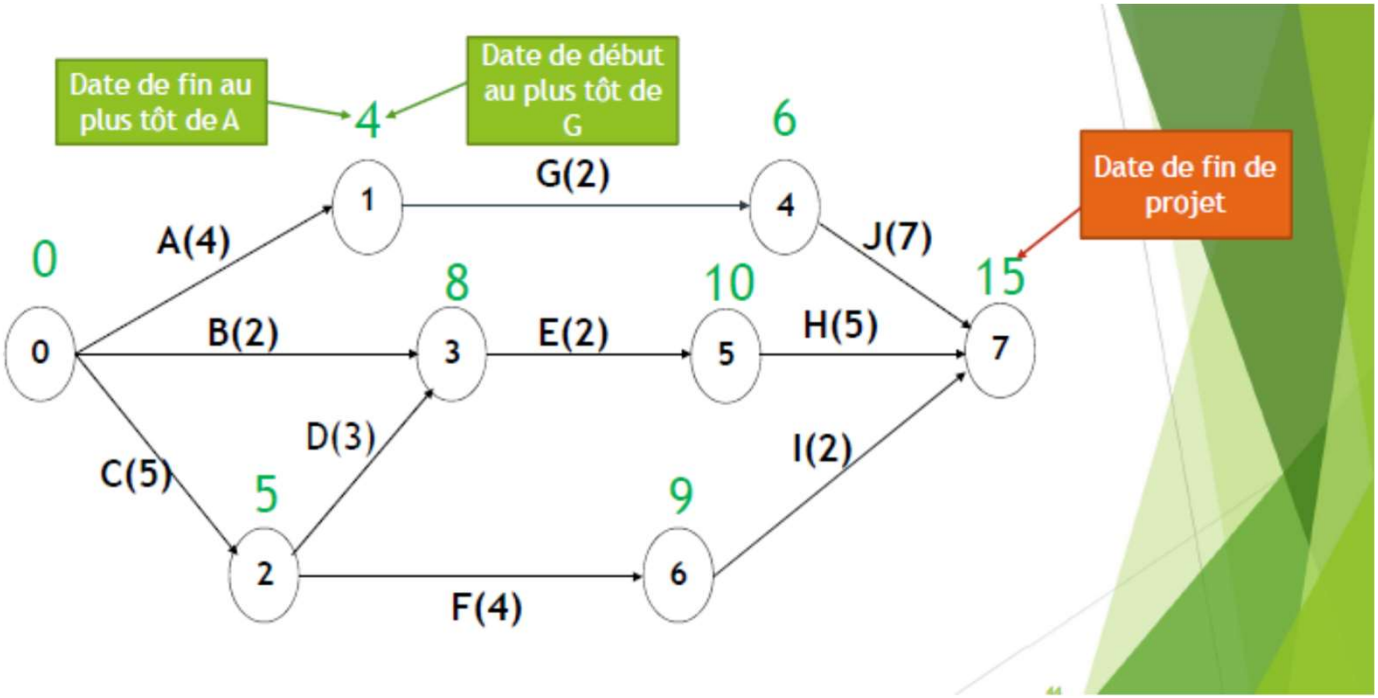

EXAMPLE: LATEST DATES (DTA)

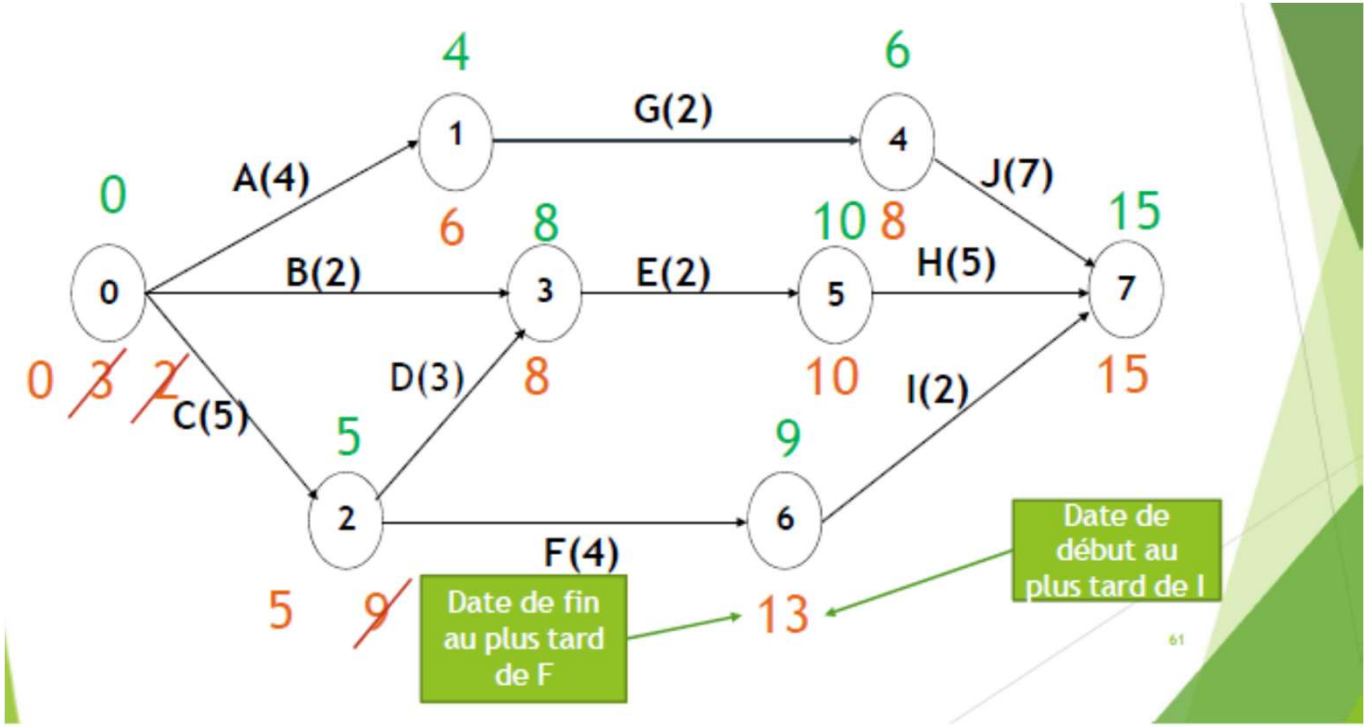

EXAMPLE: CRITICAL TASKS / PATH

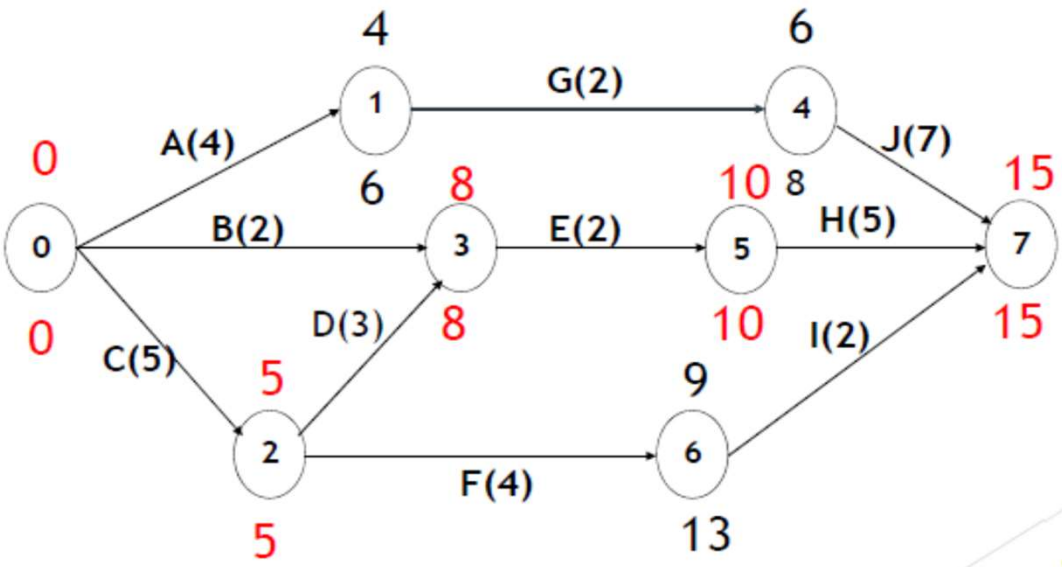

EXAMPLE: CRITICAL TASKS / PATH

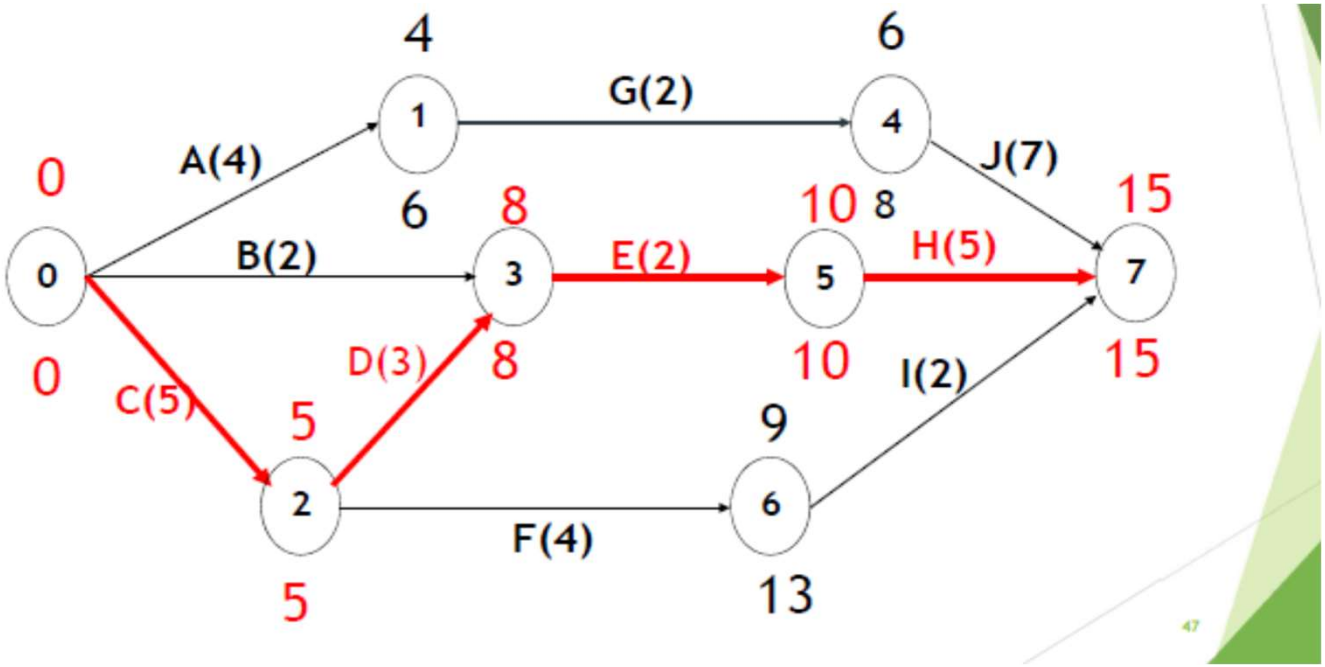

PERT-TIME - FLOATS

- Float (slack) calculation must follow earliest and latest date computation.
- It compares both scales (earliest and latest).

PERT-TIME - FLOATS EXPLANATION

- FLOAT: time a task can slip without affecting another task or project end.
- Types: Total Float, Free Float.

TOTAL FLOAT

- Delay a task can take without affecting the latest dates of following tasks.
- Total Float(i) = LFT(i) – EFT(i).

TOTAL FLOAT - EXAMPLE

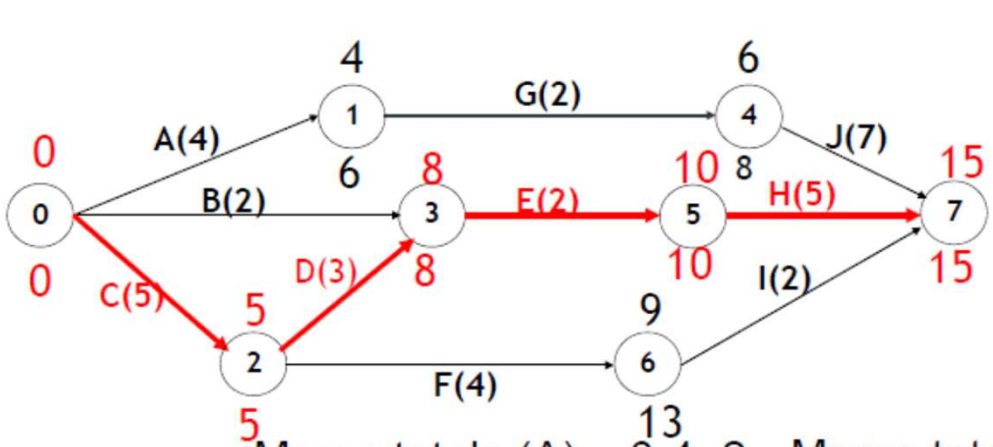

Marge totale (A) = 6-4=2

Marge totale (B) = 8-2=6

Marge totale (F) = 13-9=4

Marge totale (G) = 8-6=2

Marge totale (I) = 15-11=4

Marge totale (J) = 15-13=6

FREE FLOAT

- Delay a task can take without affecting the earliest start of its successors.
- Free Float(i) = min(ESt(j) – ESt(i) – Duration(i)) where j are successors.

FREE FLOAT - EXAMPLE

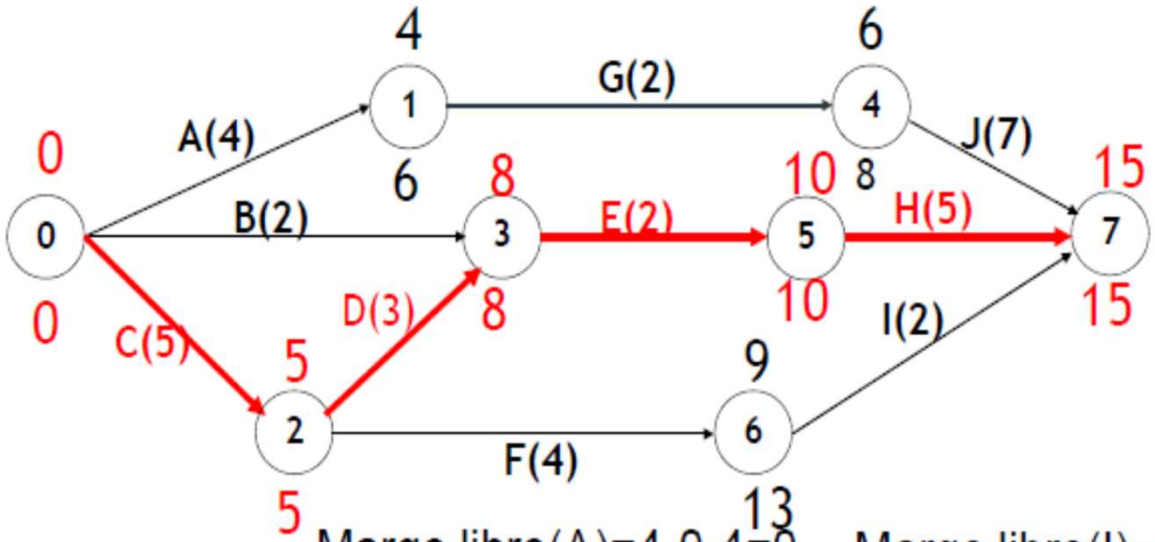

Marge libre(A)=4-0-4=0

Marge libre(B)=8-0-2=6

Marge libre(F)=9-5-4=0

Marge libre(G)=6-4-2=0

Marge libre(I)=15-9-2=4

Marge libre(J)=15-6-7=2