7D48 Technical Instruction

No.	PROSESS
	Assembling the switching unit
91	Set the main plate.
	↓
90	Set the lead pin for RZ1.
	↓
89	Set the hour and minute stator.
	↓
88	Set the second stator.
	↓
87	Set the generating stator.
	↓
86	Set the rechargeable battery connection (+).
	↓
85	Set the 1st intermediate wheel for calendar corrector.
	↓
84	Set the clutch wheel.

ILLUSTRATIONS AND SPECIAL INSTRUCTIONS

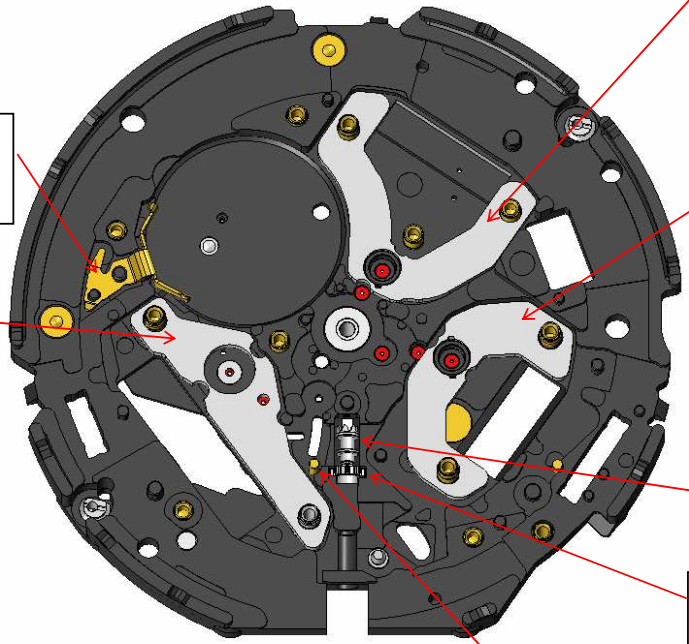

<91> Set the main plate.

<86> Set the rechargeable battery connection (+).

<87> Set the generating stator.
*Distinction from the 5J-series counterpart
See the red-circled parts, which are shaped to identify the 7J-series generating stator.

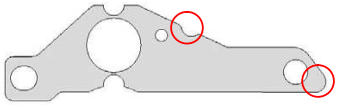

*When mounting, take care not to distort or deform the generating stator. (To prevent deterioration of electric power generation)

<88> Set the second stator.
* When mounting, take care not to distort or deform the second stator.
(To prevent deterioration of the motor)

<89> Set the hour and minute stator.
* When mounting, take care not to distort or deform the hour and minute stator.
(To prevent deterioration of the motor.)

<84> Set the clutch wheel.

<85> Set the 1st intermediate wheel for calendar corrector.

<90> Set the lead pin for RZ1.
*Ensure that the lead pin for RZ1 is tightly mounted without any clearance.

No.	PROSESS
	Assembling the switching unit
83	Set and lubricate the winding stem.
	↓
82	Set and lubricate the center wheel & pinion.
	↓
81	Set the train wheel setting lever.
	↓
80	Set the yoke and hook the arm of it.
	↓
Lubricating points of the switching unit-1	
	-Stem of the setting lever
	-Point of contact between the yoke and clutch wheel
	-Lower pivots of the wheels (4#, 3#, 50#, 75#)
	-Guiding slit of the train wheel setting lever

ILLUSTRATIONS AND SPECIAL INSTRUCTIONS

<82> Set and lubricate the center wheel & pinion.
*Lubricating point: convex part (Refer to the illustration below.)
*Type of oil, oil quantity: A0-3II-1 (To prevent parts from wearing)
*Lubricating point: inner edge of the ring (Refer to the illustration below.)
*Type of oil, oil quantity: A0-3II-1 (To prevent parts from wearing)

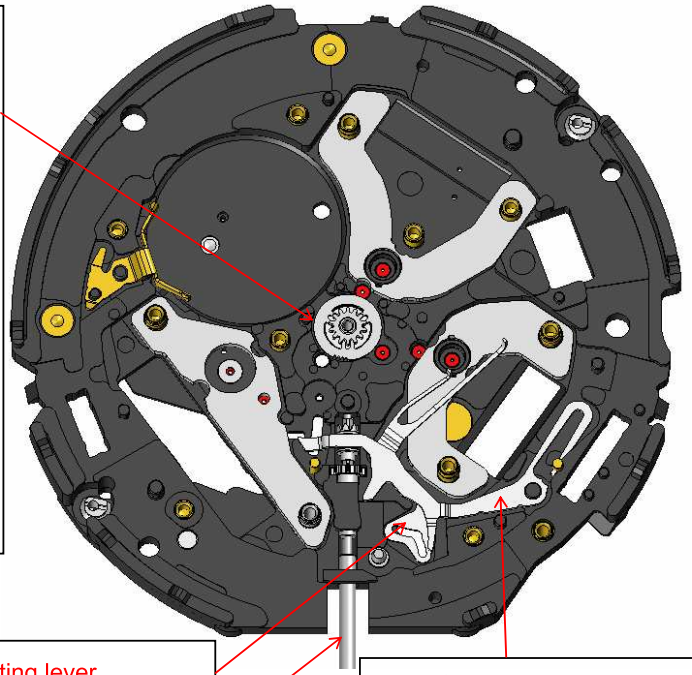

<81> Set the train wheel setting lever.

<83> Set and lubricate the winding stem.
*Type of oil, oil quantity: A0-3 Lubricate the entire profile of the winding stem.
(To prevent parts from wearing)
*Securely install the winding stem, giving it gentle rotations so that the flat face of the winding stem will be engaged with both the clutch wheel and the 1st intermediate wheel for calendar corrector.

<80> Set the yoke and hook the arm of it.
Securely set the arm of the yoke inside the pin, taking care not to deform or damage the yoke.

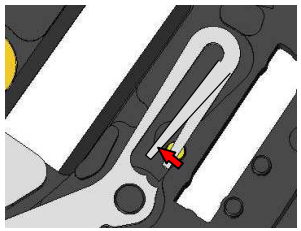

Lubricating points of the switching unit-1

1. Point of contact between the yoke and clutch wheel
*Type of oil, oil quantity: A0-3III-1 (To prevent parts from wearing)

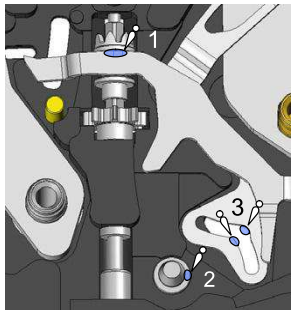

2. Axes of the setting lever
*Type of oil, oil quantity: A0-3II-1 (To prevent parts from wearing)
3. Guiding slit of the train wheel setting lever
*Type of oil, oil quantity: A0-3I-2 (To prevent parts from wearing)
4. Lower pivots of the wheels (4#, 3#, 50#, 75#)
*Type of oil, oil quantity: A0-3II-1 (To maintain good performance)

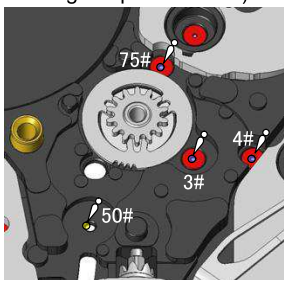

7D48 Technical Instruction

No.	PROSESS
79	Set the setting lever.
	↓
78	Set the setting lever spring.
	↓
77	Tighten the setting lever spring.（33#）
	↓
Hook the arm of the setting lever.	
	↓
Lubricating points of the switching unit-2	
	-Point of engagement between the yoke and setting lever
	-Point of contact between the yoke and setting lever
	-Axis of the setting wheel

ILLUSTRATIONS AND SPECIAL INSTRUCTIONS

<79> Set the setting lever.

*Before setting the setting lever, put the train wheel setting lever inside the frame of the main plate (as illustrated in blue). This will make the engagement between the pin of the setting lever and the guiding slit of the train wheel setting lever easier.

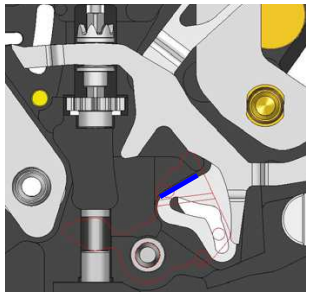

Hook the arm of the setting lever.

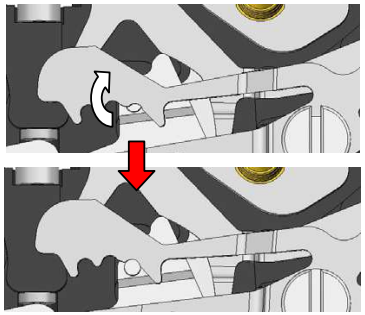

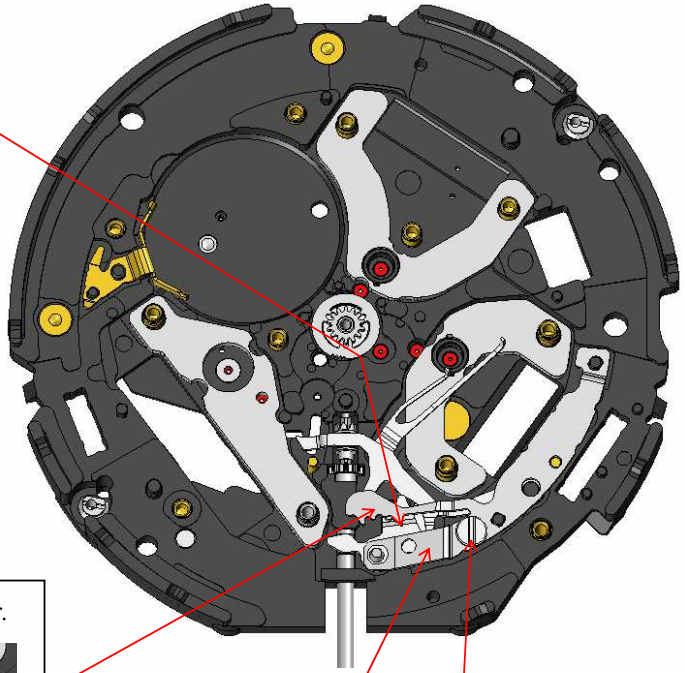

<78> Set the setting lever spring.

<77> Tighten the setting lever spring.

Lubricating points of the switching unit-2

1. Point of engagement between the yoke and setting lever
   *Type of oil, oil quantity: A0-3II-1
   (To prevent parts from wearing)
2. Point of contact between the yoke and setting lever
   *Type of oil, oil quantity: A0-3II-1
   (To prevent parts from wearing)

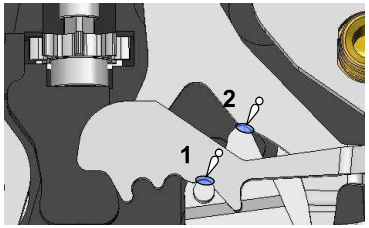

3. Axis of the setting wheel
   *Type of oil, oil quantity: A0-3II-1
   (To prevent parts from wearing)

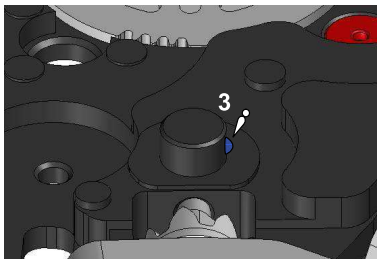

No.	PROSESS
	Assembling the wheels
	Lubricate the lower pivots of the wheels.
	↓
76	Set the spacer for center wheel and pinion.
	↓
75	Set and lubricate the minute wheel & pinion.
	↓
74	Set the intermediate minute wheel.
	↓
73	Set the setting wheel.
	↓
72	Set the hour and minute rotor.
	↓
71	Set the second rotor.
	↓
70	Set the generating rotor.

ILLUSTRATIONS AND SPECIAL INSTRUCTIONS

Lubricate the lower pivots of the wheels.
*Type of oil, oil quantity: A0-2II-1
(To maintain good performance)

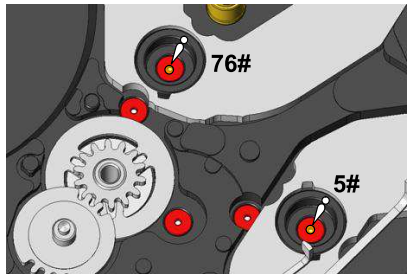

<71> Set the second rotor.
* Make sure to set the correct rotor. (The second rotor and the hour and minute rotor are different in their specification.)

<75> Set and lubricate the minute wheel & pinion.
*Type of oil, oil quantity: A0-3II-1
(To prevent parts from wearing)

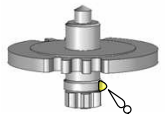

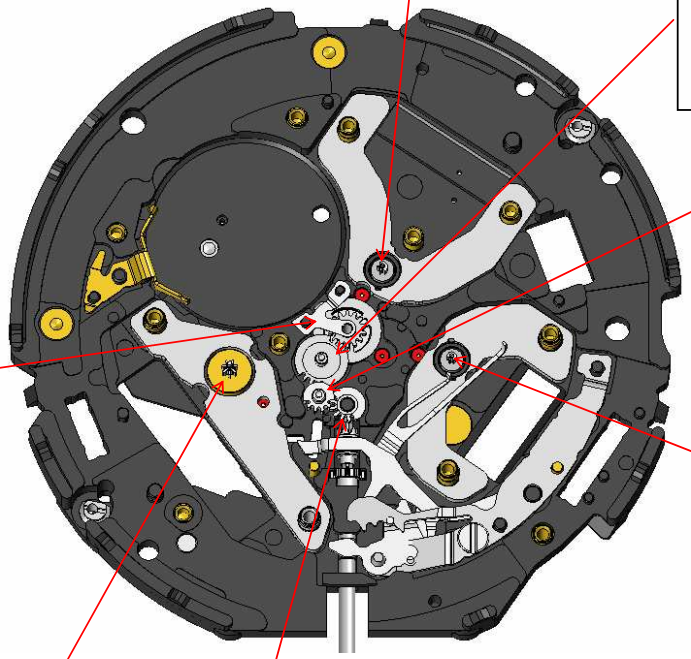

<74> Set the intermediate minute wheel.
*Make sure the intermediate minute wheel is put in the correct direction. (See the illustration below.)

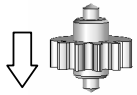

<76> Set the spacer for center wheel and pinion.
*Firmly press down the point of engagement to securely set it without any clearance.

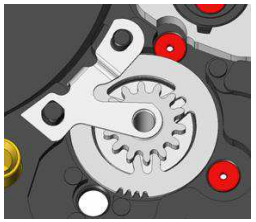

<72> Set the hour and minute rotor.
*Make sure to set the correct rotor. (The hour and minute rotor and the second rotor are different in their specification.)

Distinction between the hour and minute rotor and the second rotor

Hour and minute rotor | Second rotor

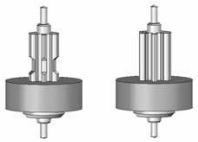

<70> Set the generating rotor.

<73> Set the setting wheel.
*The setting wheel is reversible.

7D48 Technical Instruction

No.	PROSESS
69	Set the 3rd wheel & pinion.
	↓
68	Set the 4th wheel & pinion.
	↓
67	Set the intermediate second wheel.
	↓
66	Lubricate the second wheel & pinion.
	↓
65	Set the train wheel bridge and check the pivot hole.
	↓
64	Tighten the train wheel bridge screw.

ILLUSTRATIONS AND SPECIAL INSTRUCTIONS

<67> Set the intermediate second wheel.

<69> Set the 3rd wheel & pinion.
* The 3rd wheel & pinion has three holes for distinction from the 5J2-series counterpart.

<68> Set the 4th wheel & pinion.
*The 4th wheel & pinion has four holes for distinction from the 5J2- series counterpart.

<64> Tighten the train wheel bridge screw.

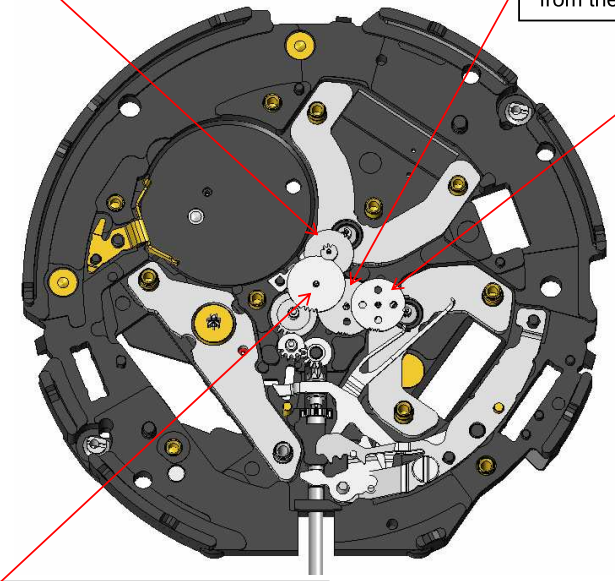

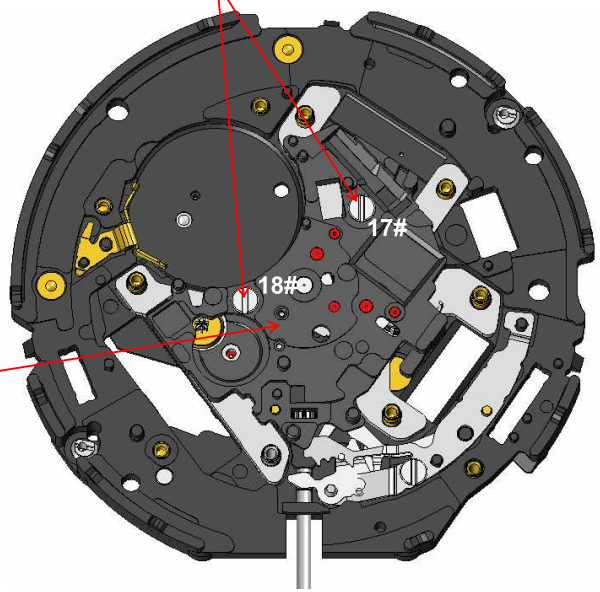

<66> Lubricate the second wheel & pinion.
*Lubricating points: convex part
(Refer to the illustration below.)
*Type of oil, oil quantity: A0-3II-1
(To prevent parts from wearing)

Lubricate with an appropriate amount of oil, as excessive lubrication may cause the second hand to wiggle while the watch resumes from power save mode.

<65> Set the train wheel bridge and check the pivot hole.

No.	PROSESS
Lubricate the upper pivots of the wheels. (5#, 76#, 4#, 3#, 74#, 75#, Tips of the teeth of the pinion of generating rotor 66#)	
	↓
63	Set the hour and minute coil block.
	↓
62	Set the second coil block.
	↓
61	Set the generating coil block.
	↓
	Check each coil block resistance.

ILLUSTRATIONS AND SPECIAL INSTRUCTIONS

Check each coil block resistance.

*Measure the coil block resistance after securely installing each coil block to the movement.

Hour and minute coil block

Coil block for driving: 1.00kΩ–1.25kΩ

Coil block for detection: 270Ω– 330Ω

Second coil block

2.00kΩ – 2.45kΩ

Generating coil block

360Ω – 420Ω

<62> Set the second coil block.

*When mounting the second coil block, take care not to deform or deform the coil block core.
(To prevent deterioration of the motor)

Lubricate the upper pivots of the wheels.

◆ 5#, 76#

*Type of oil, oil quantity: A0-2II-1
(To maintain good performance)

◆4#, 3#, 74#, 75#

*Type of oil, oil quantity: A0-3II-1
(To maintain good performance)

◆Tips of the teeth of the pinion of the generating rotor (66#)

*Type of oil, oil quantity: A0-3II-2
(To prevent parts from wearing)

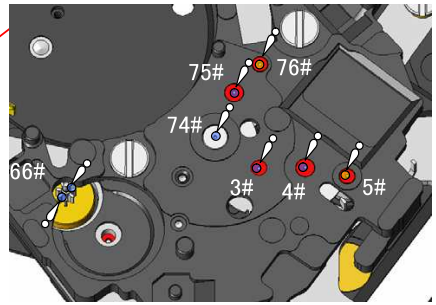

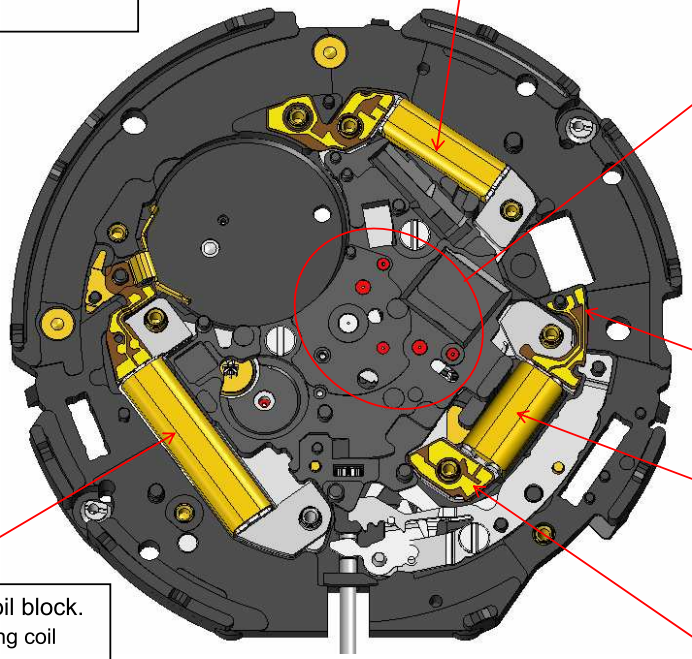

Pattern for checking the coil for detection

<63> Set the hour and minute coil block.

*When mounting the hour and minute coil block, take care not to distort or deform the coil block core.
(To prevent deterioration of the motor)

Pattern for checking the coil for driving

<61> Set the generating coil block.

*When mounting the generating coil block, take care not to deform or deform the coil block core. (To prevent deterioration of the motor)

No.	PROSESS	ILLUSTRATIONS AND SPECIAL INSTRUCTIONS
	Assembling the circuit	
60	Set the insulator for circuit block.	
	↓	
	Check the current consumption for the circuit block.	
	↓	
59	Set the circuit block.	
	↓	
58	Set and lubricate the intermediate wheel for generating rotor.	

<59> Set the circuit block.
*Firmly press down the points of engagement to securely set it in position.

Positioning guide tubes : 121#, 124# (green-circled in the illustration.)
Points of engagement : 109#, 124#, 125#, 126#, 142#, 143#, 144# (red-circled in the illustration)

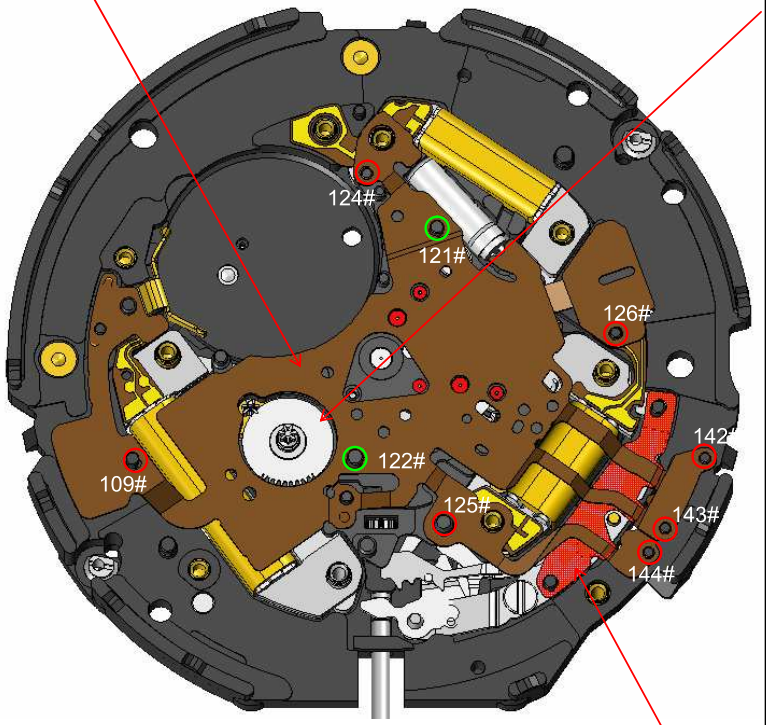

<58> Set and lubricate the intermediate wheel for generating rotor.
Position (1) shown in the illustration below
*Type of oil, oil quantity: A0-3II-2 (To prevent parts from wearing)
Position (2) shown in the illustration below
*Type of oil, oil quantity: A0-3II-1 (To prevent parts from wearing)

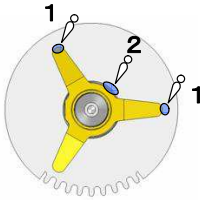

*Distinction between the 7D-series intermediate wheel for generating rotor and the 5J-series counterpart
At the position shown by the red arrow, the 7D-series intermediate wheel for generating rotor has a groove, while the 5J-series counterpart does not.

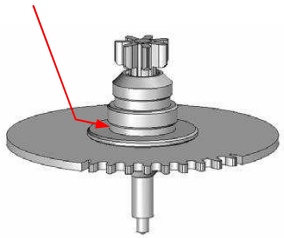

<60> Set the insulator for circuit block.

7D48 Technical Instruction

No.	PROSESS
57	Set the oscillating weight bridge and check the pivot hole.
	↓
56	Set the circuit block cover C.
	↓
55	Tighten the circuit block cover C screws. (28#, 101#, 103#, 401#)
	↓
54	Set the circuit block cover D.

ILLUSTRATIONS AND SPECIAL INSTRUCTIONS

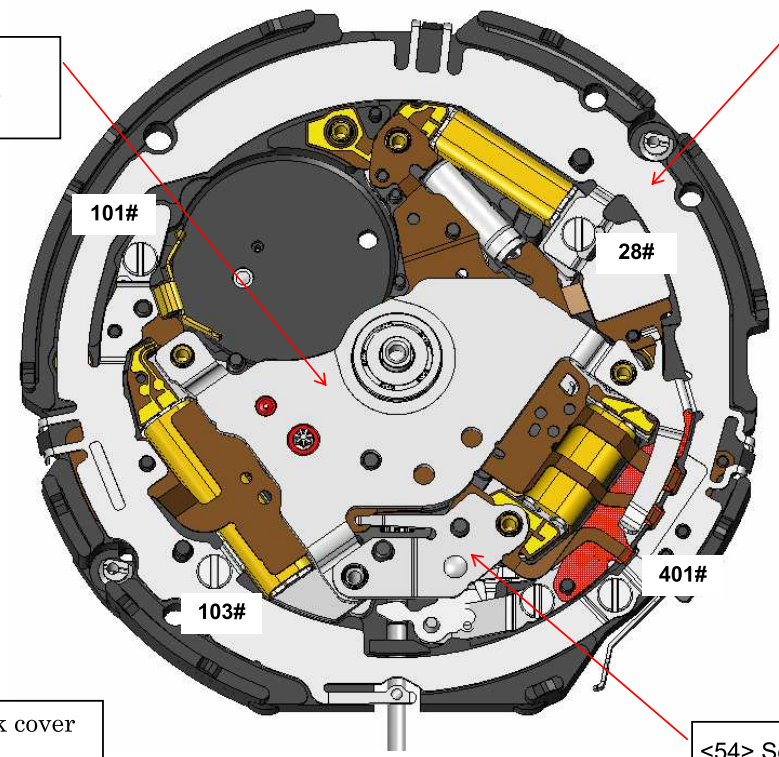

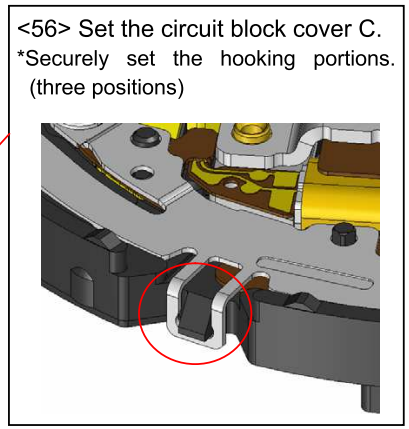

7D48 Technical Instruction

No.	PROSESS	ILLUSTRATIONS AND SPECIAL INSTRUCTIONS
53	Set the circuit block cover A.	
52	Tighten the circuit block cover A screws. (25#, 26#, 27#, 36#)	

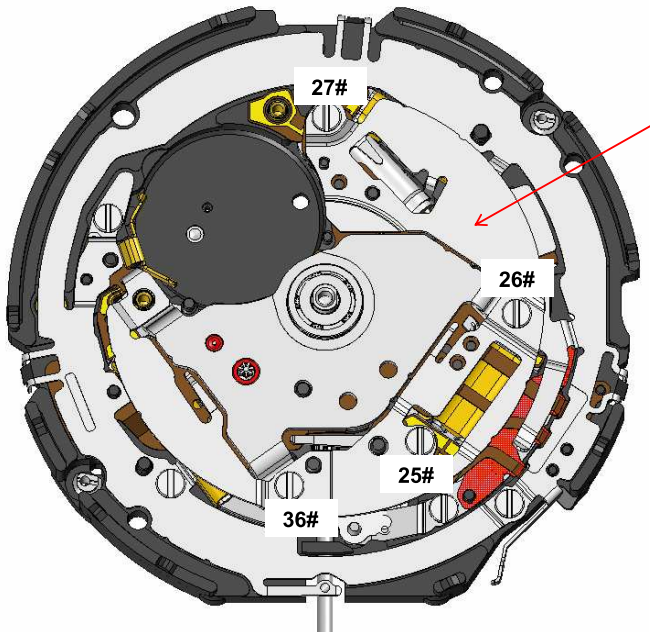

<53> Set the circuit block cover A.

<52> Tighten the circuit block cover A screws.
(25#, 26#, 27#, 36#)

No.	PROSESS	ILLUSTRATIONS AND SPECIAL INSTRUCTIONS
	Lubricate the upper pivots of the wheels. (66#, 65#, bearings of the wheels)	
	↓	
	Measure the current consumption.	

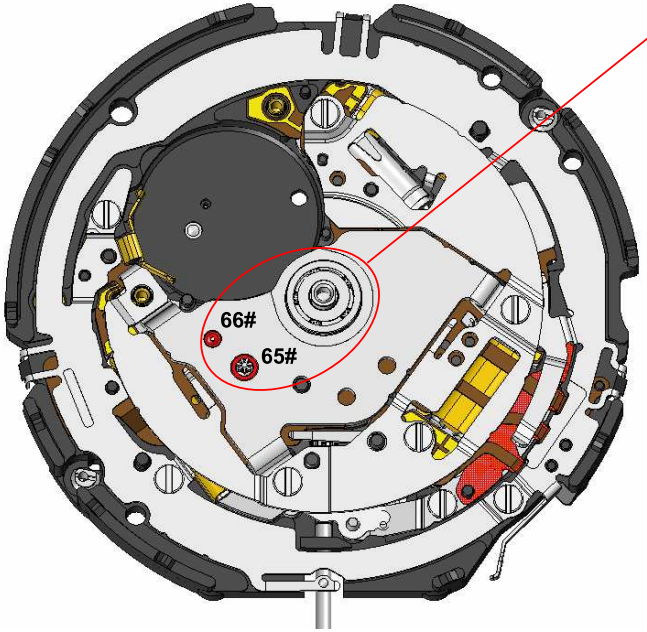

Lubricate the upper pivots of the wheels.

1. 66# upper pivot
   *Type of oil, oil quantity: A0-3II-2 (To prevent parts from wearing)
2. 65# upper pivot
   *Type of oil, oil quantity: A0-3II-2 (To prevent parts from wearing)
3. 65# pinion
   *Type of oil, oil quantity: A0-3II-3 (To prevent parts from wearing)
4. Bearings of the wheels
   *Type of oil, oil quantity: A0-3II-3 (To prevent parts from wearing)

Note) Additionally, you may lubricate the gap between the inner ring axis and the outer ring axis.

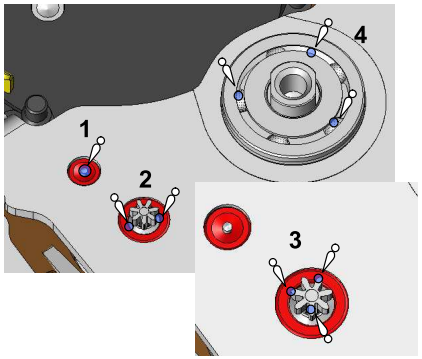

No.	PROSESS	ILLUSTRATIONS AND SPECIAL INSTRUCTIONS
	Assembling the power section	
7	Set the rechargeable battery unit.	
	↓	
6	Set the insulator for rechargeable battery.	
	↓	
5	Set the rechargeable battery clamp.	
	↓	
4	Tighten the rechargeable battery clamp screws. (102#, 35#)	

<7> Set the rechargeable battery unit.
*Stretching out the plus terminal to mount the rechargeable battery unit.
*Take care not to deform the minus terminal when removing the rechargeable battery unit. (Remove the battery portion first.)

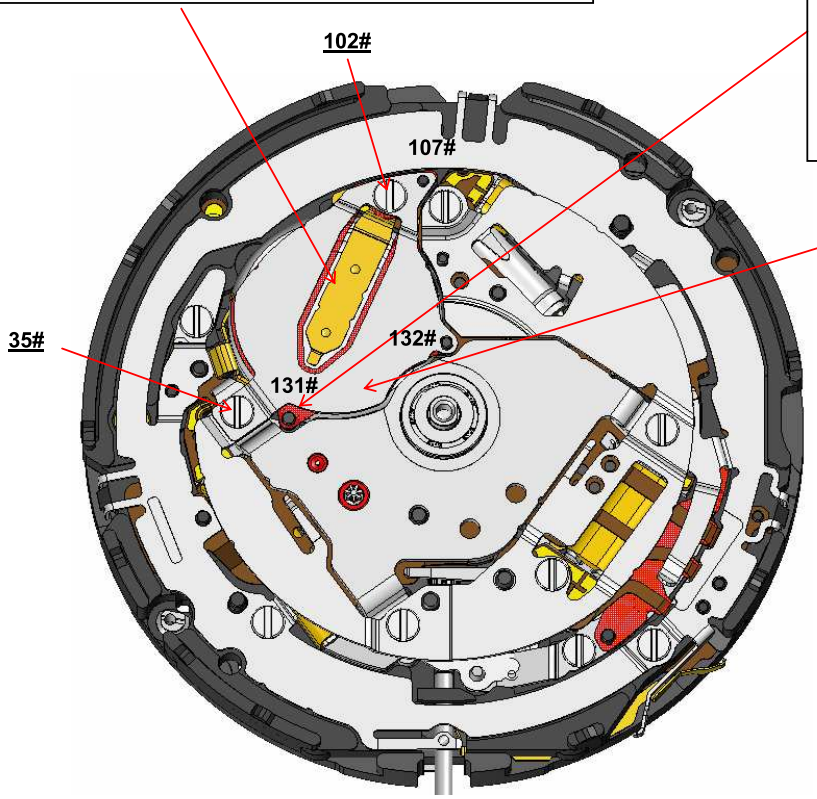

<6> Set the insulator for rechargeable battery.
*Firmly press down the points of engagement (132#, 107#) to securely set it in position.
-Positioning guide tubes: 131#, 132#
-Points of engagement: 132#, 107#

<5> Set the rechargeable battery clamp.
*Firmly press down the point of engagement (132#) to securely set it in position.
-Positioning guide tubes: 132#, 107#
-Point of engagement: 132#

<4> Tighten the rechargeable battery clamp screws. (102#, 35#)

No.	PROSESS
3	Set the oscillating weight wheel.
	↓
2	Set the oscillating weight.
	↓
1	Tighten the oscillating weight screw.
	↓
	Check the performance of power generation.
	↓
	Check the movement of the oscillating weight.
	↓
	Charge the rechargeable battery.

ILLUSTRATIONS AND SPECIAL INSTRUCTIONS

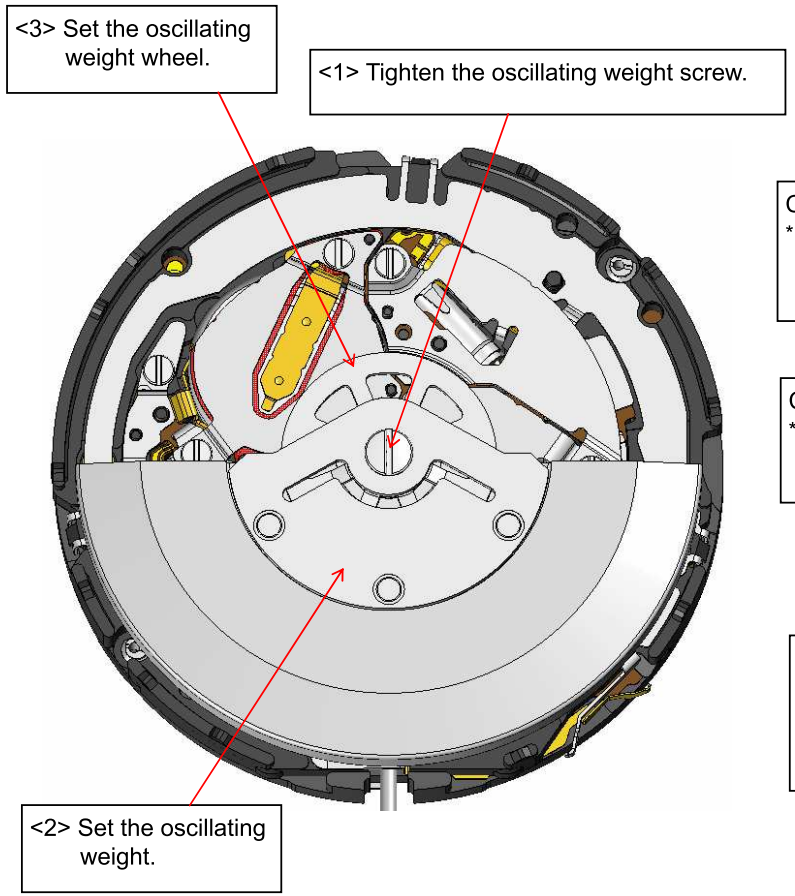

Check the performance of power generation.
* The increase in voltage after spinning the oscillating weight should not be less than 50 mvV.

Check the movement of the oscillating weight.
*Ensure that the oscillating weight rotates smoothly without any friction or resistance.

Charge the rechargeable battery.
* Charge the rechargeable battery until the voltage reaches 1.3V or higher by using a recharger or by your hand movement.
(To check the PTP movement)