TMI
TIME MODULE

Cal. YT57B

φ27.0 mm
H 4.89 mm

Items	Rev.	Page
Specifications	01	1
Appearance	00	2
Casing	00	3
Hand fitting	01	4
Hand setting stem	01	5
Dial-01	01	6-01
Dial-02	00	6-02
Dial-03	00	6-03
Holding ring for dial	01	7
Attention to use	00	8
Attention of casing part structure	00	9

Date: 11/Mar./'08

S.EPSON Products

MOVEMENT SPECIFICATIONS

CAL. YT57B

AGS-Automatic Generating System 12''' Size Movement / Three Hands (H/M/S) / date

1. MOVEMENT DIMENSIONS

*Outside diameter	φ 27.6mm
*Casing diameter	φ 27.0mm
*Total height	4.89mm

2. TIME STANDARD

*Type of quartz oscillator	Tuning fork
*Frequency of quartz oscillator	32,768 Hz
*Accuracy	±20 seconds per month (on wrist)
*Operating temperature range	−5℃ to +50℃
*Regulation device	Nil (Pre-adjusted)

3. INDICATOR / FUNCTIONS

*3 Hands	Hour / Minute / Second
*Calendar	Instant setting device for date calendar
*Reset switch	
*Automatic generating system	Quick-start function
*Power depletion warning function	

(Second hand moves at 2-second intervals when voltage is 1.2 ±0.1V)

*Power saving function	Crown pulled out with 2nd click : For 4 - 5 years in storage with full charge (It depends on the conditions.)
*Setting mechanism	Crown at normal position : Free Crown pulled out 1st click : Instant date change Crown pulled out 2nd click : Time setting / Reset /Power saving function
*Working time	Approx. 6 months (After fully charged)

4. FEATURES

*Jewels	6 Jewel
*Anti-magnetism	Over 1600A/m (Direct current magnetic field)
*Maximum unbalance of hands	Second hand : 3 mg・mm Minute hand : 70 mg・mm
*Driving current consumption	Approx. 0.57μA (1.4V)
*Operation stopping voltage	0.45 V

5. POWER SUPPLY

*Type / Size	Titanium-lithium-ion second battery φ 9.5 × t 2.0 mm
*Capacity	4.0mAh
*Nominal voltage	1.5V

6. SEPARATED PARTS (Parts code)

*Hand setting stem	0351652
*Holding ring for dial	0866780

7. TEST OF ACCURACY

*Equipment to be used	SEIKO quartz tester QT-99, Greiner quartz timer-C , Witschi Q-tester 4000
*Duration of measurement	10 seconds
*Microphone to be used	Electromagnetic detection type

All specifications are subject to change without notice.

Cal. YT57B	Appearance	Date: 8/Jul./'99 Rev.:00

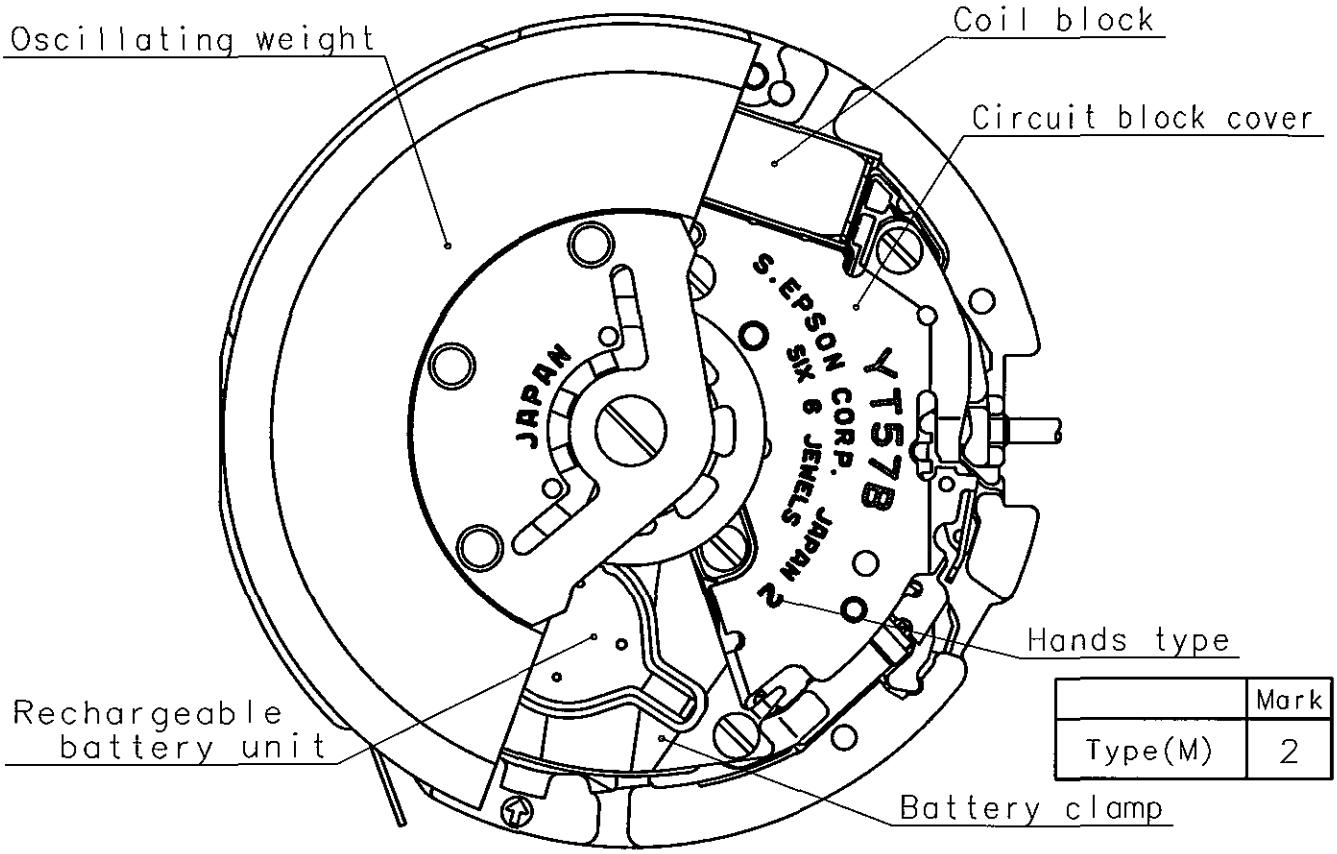

	Mark
Type(M)	2

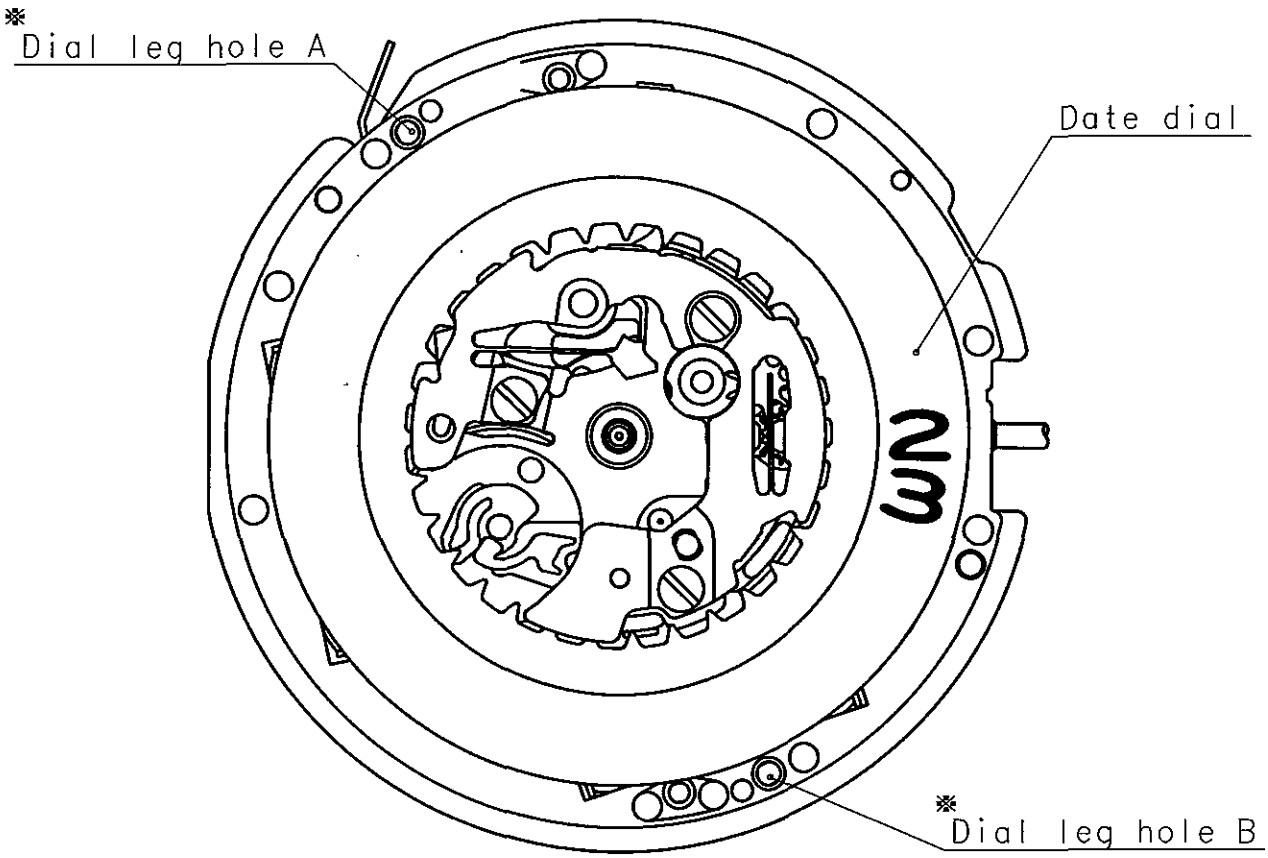

※ :Combination of dial leg hole A-B

Cal. YT57B	Casing	Date: 8/Jul./'99
		Rev.:00

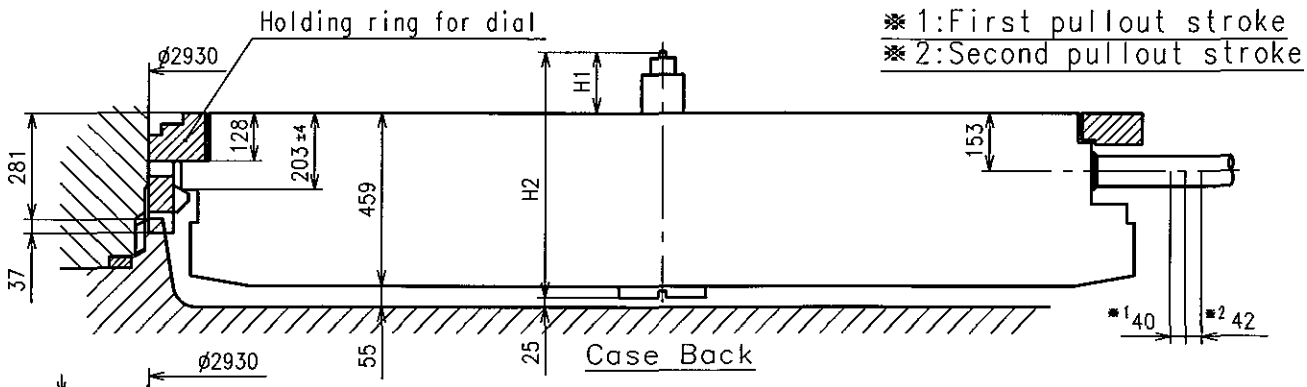

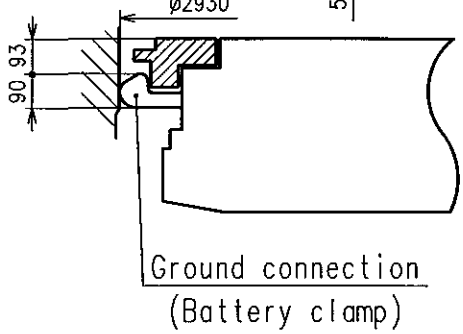

Center post		Type M (2) YT57B1*
Maximum height from dial suppot	H1	175
Total height incl.movement	H2	664

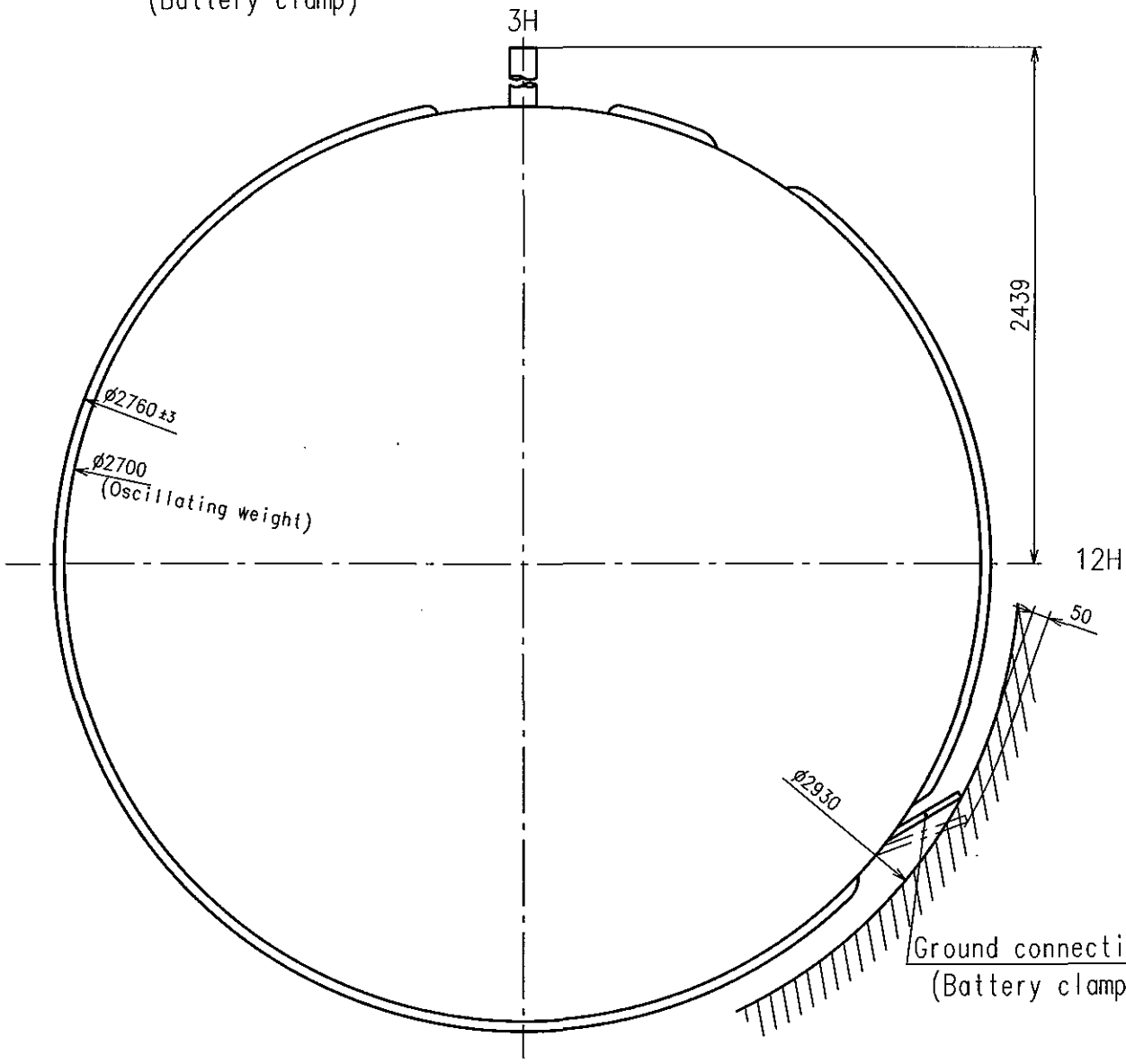

Unit : 1=1/100mm

Cal. YT57B	Hand fitting	Date: 8/Oct./'99 Rev.:01

※Minute hand unbalance ≦ 70μg·m (0.7 μN·m)
※Second hand unbalance ≦ 3μg·m (0.03μN·m)

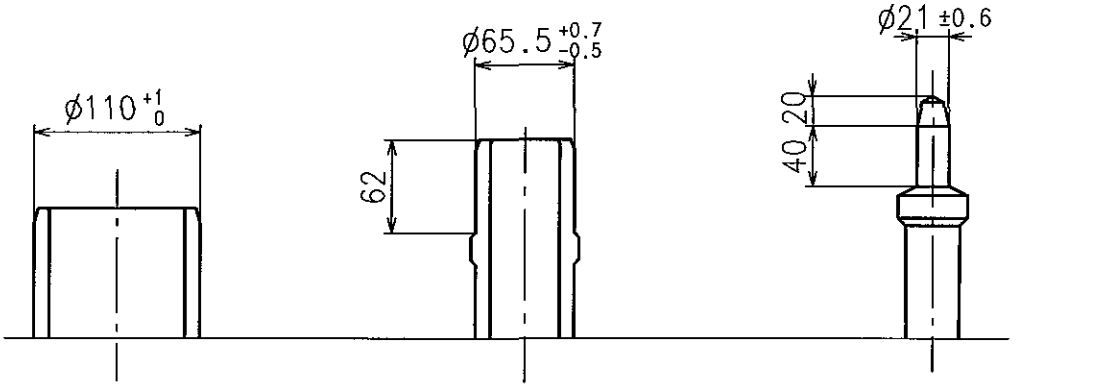

Hour wheel　　Center wheel　　Fourth wheel

	Parts No.		
	Hour wheel	Center wheel	Fourth wheel
Type M (2) YT57B1*	0271670	0221676	0241670

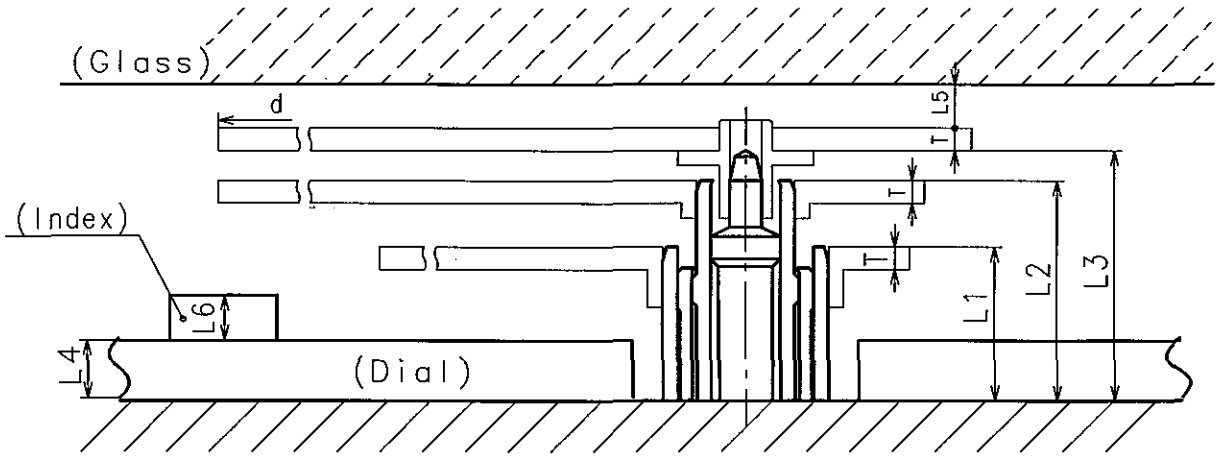

	L1	L2	L3	L4	L5	L6	T	d
Type M (2) YT57B1*	102	146	166	40	MIN: 50	MAX: 50	15	MAX: ø2500

Unit : 1=1/100mm

Cal. YT57B	Hand setting stem	Date:24/Feb./'00 Rev.:01

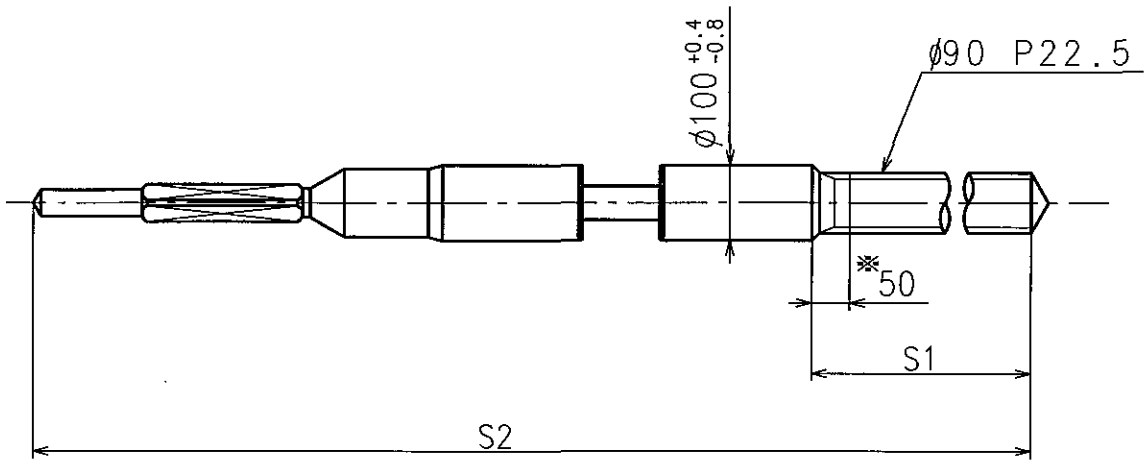

※ Not threaded

	Part No.	S1	S2
Standard	0351652	1109	2220

Material : Steel

Hardness : Vickers 550±50

Unit : 1=1/100mm

Cal. YT57B	Dial-01	Date:10/Apr./'07 Rev.:01

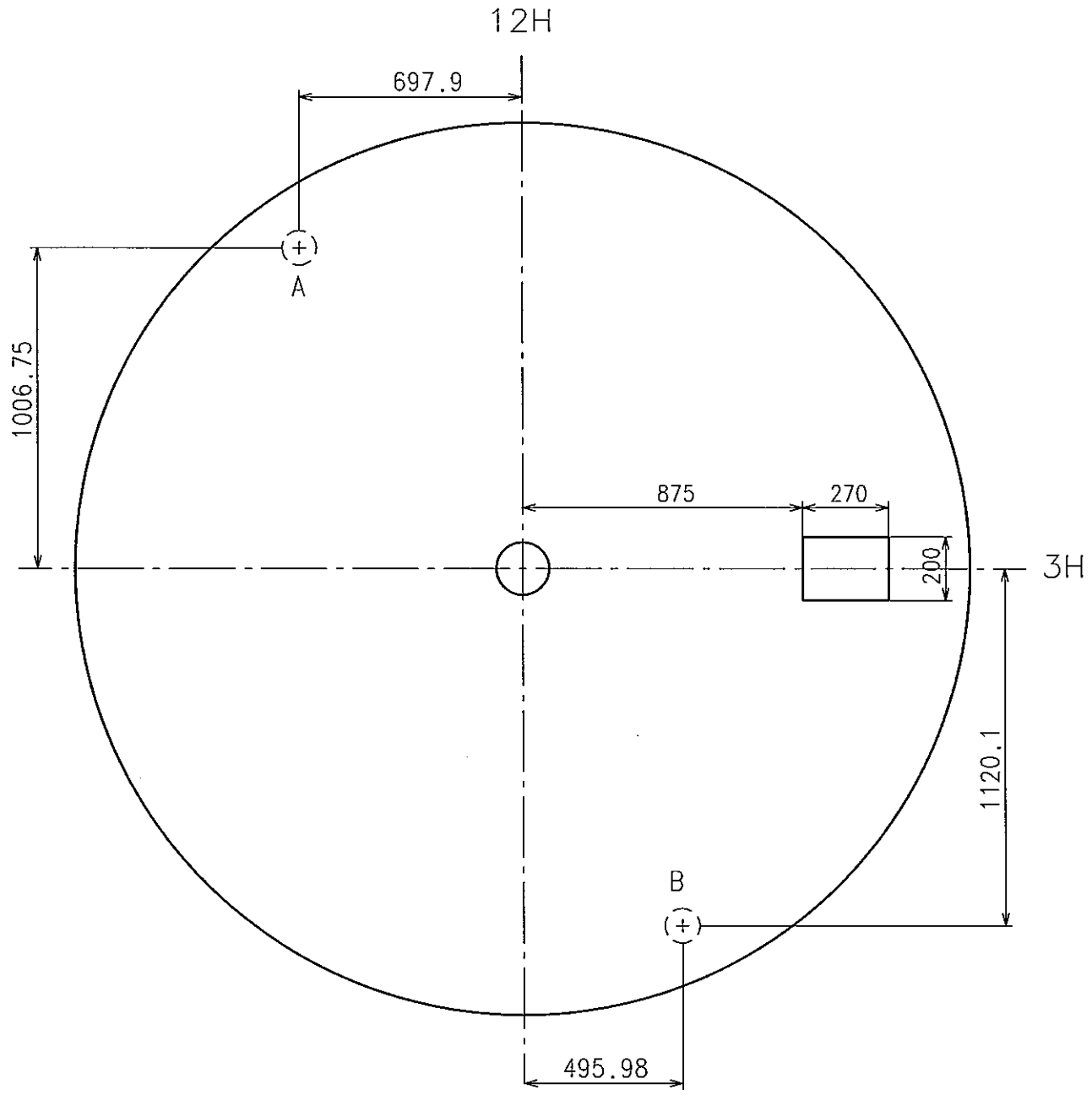

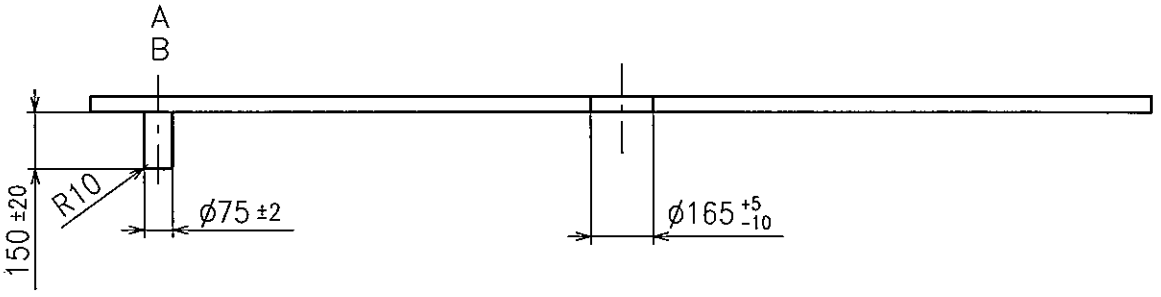

Unit : 1=1/100mm

Cal. YT57B	Dial-02	Date: 10/Apr./'07
		Rev.:00

TM Ref.
YT57B12
YT57B12B

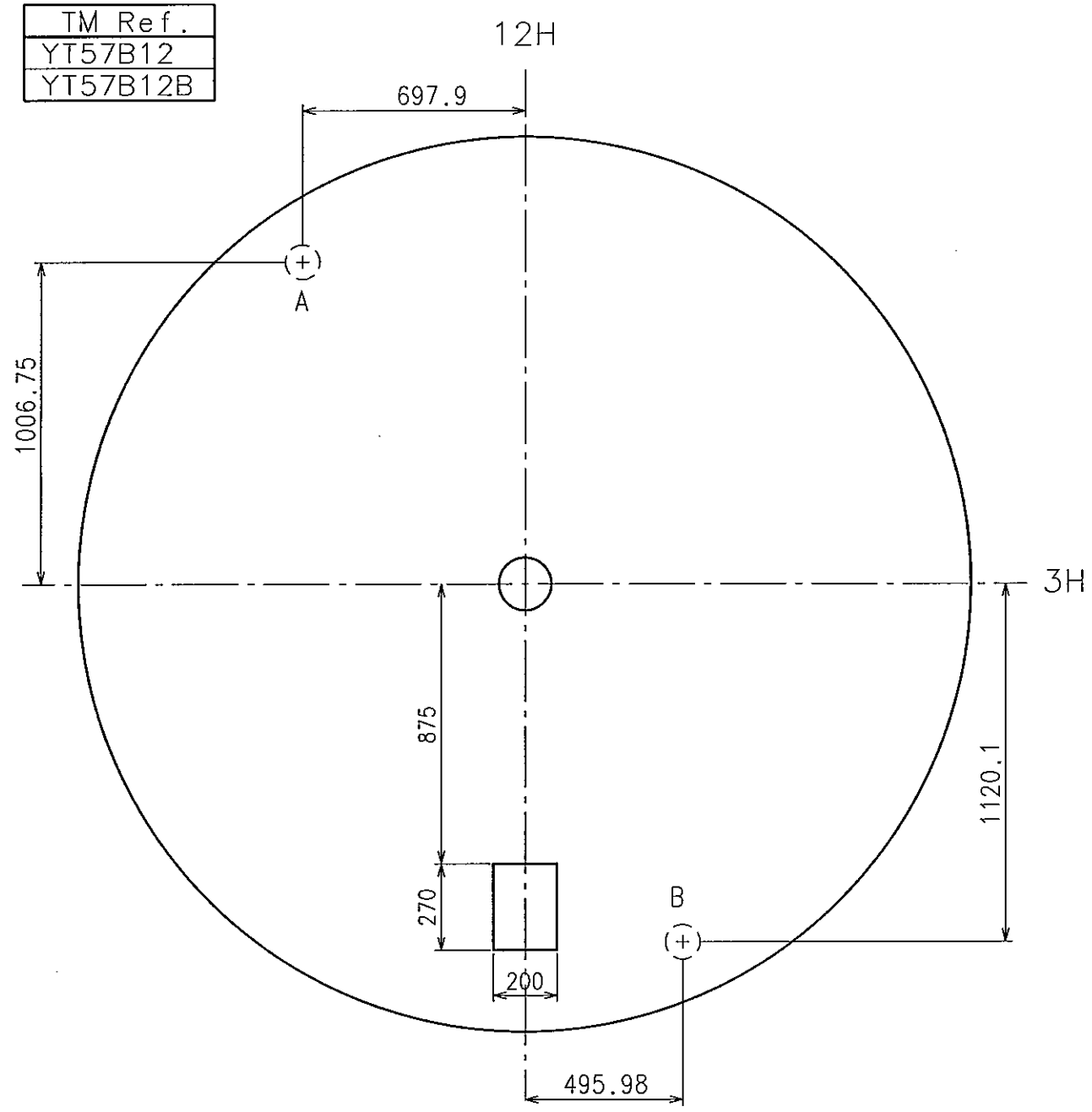

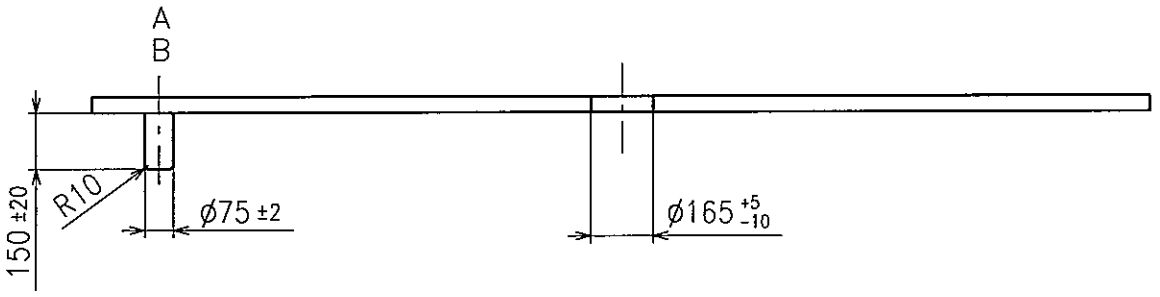

Unit : 1=1/100mm

Cal. YT57B	Dial-03	Date:11/Mar./'08
TM ref. YT57B19B		Rev.:00

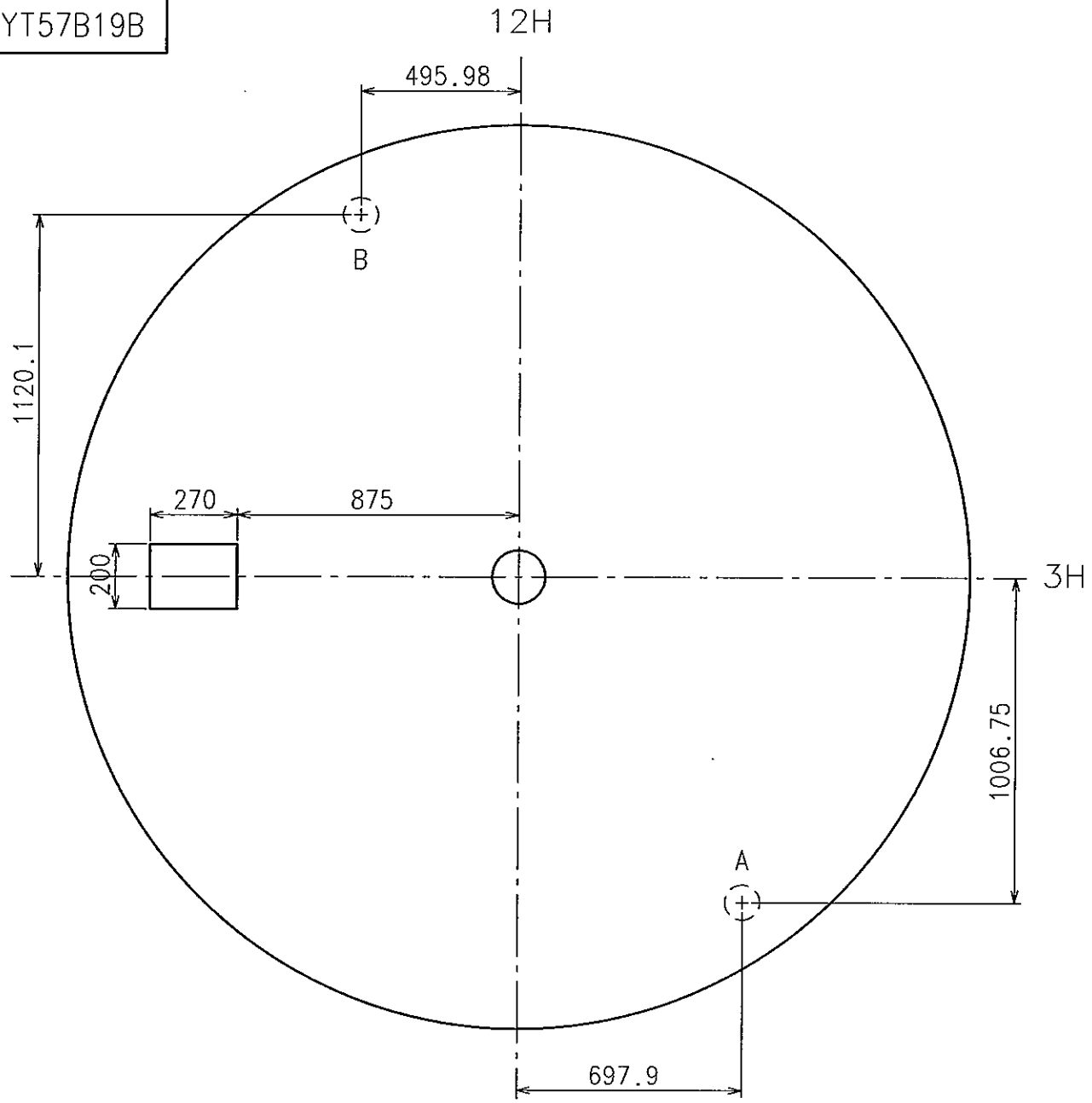

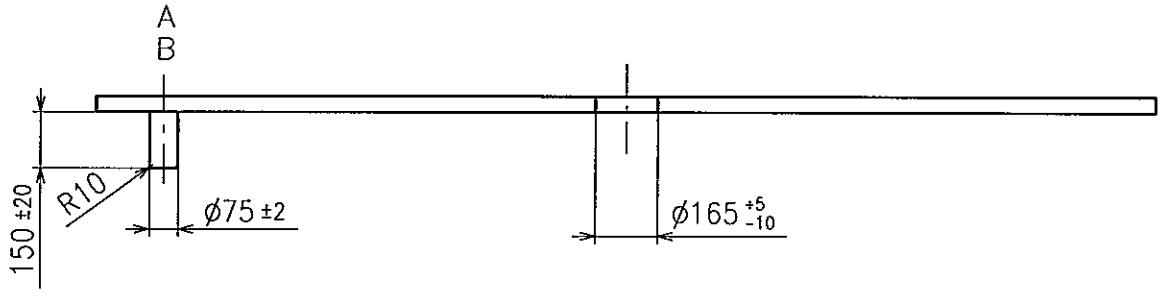

Unit : 1=1/100mm

Cal. YT57B	Holding ring for dial	Date:24/Feb./'00 Rev.:01

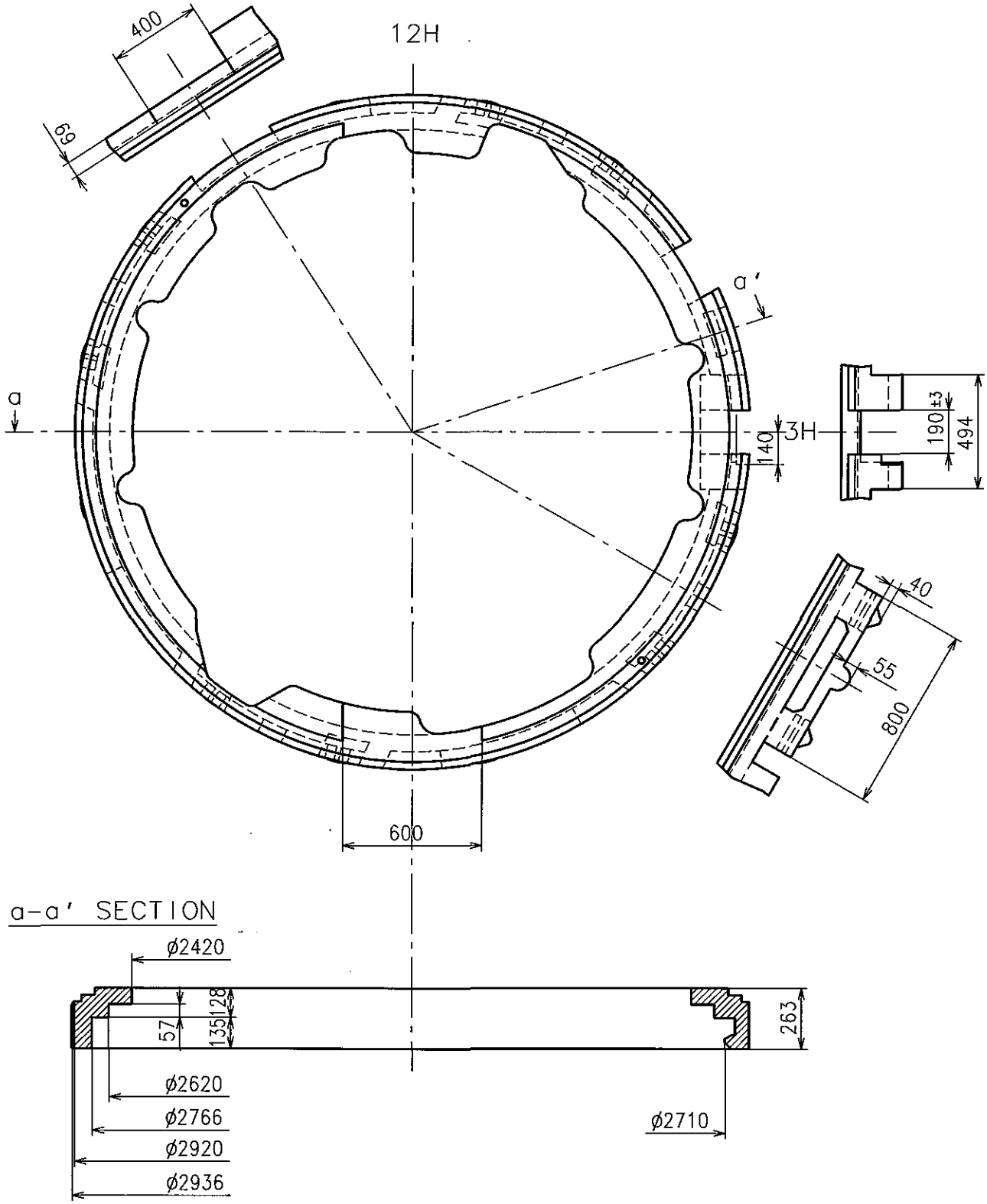

Unit : 1=1/100mm

1. When you start to use the stopped watch

(1) Swing the watch from side to side rhythmically as shown in the illustration.
The second hand starts moving at two-second interval after several swinging of the watch.
However, it is still lack of energy.

(2) Please swing the watch further more even if the second hand starts moving at one-second interval.
It is recommended that the watch be swung more than 200 times. (*)

(*) This is the general guideline, because it depends on the strength of swinging.

(3) While the watch is swung causes the automatic power generating system to work, and the watch is powered by the electrical energy.

(4) Before using the watch, please set the time and calendar.

2. How to restart the watch which has been left unused for a long time

The capacitor continues to discharge and the voltage decrease ever after the watch has stopped.
In order to restart the watch which has been left for a long time since the watch had stopped, it may be necessary to swing the watch more than the general guidelines above.

The watch which has been left for (A) since the watch had stopped, requires (B) swings.

(A)		(B)
1 year	=>	more 100 times
more than 2 years	=>	more 400 times

It is not necessary to swing the watch further more if the watch has been left unused more than 3 months.

3. Power depletion warning function (BLD)

When the voltage falls to a certain level, the second hand moves at two-second interval.
If you find the second hand moving at two-second interval while the watch is in use or while it has been left unused, the watch may run down soon.
Please be sure to swing the watch and recharge the battery.

Continuance time under the BLD wathc condition
Min. 12 hours (Max. 24 hours)

<Note>

If the watch is swung extremely quickly with vigor, it may run down in 12 hours.

YT57B Attention of casing part structure

Date: 15/May/'07

Rev.: 00

Transparency case back glass

Direct sunlight increase battery consumption and lower the duration or cause difficulty in charging battery.

In order to prevent the above situations , we recommend following two things for transparency case back glass.
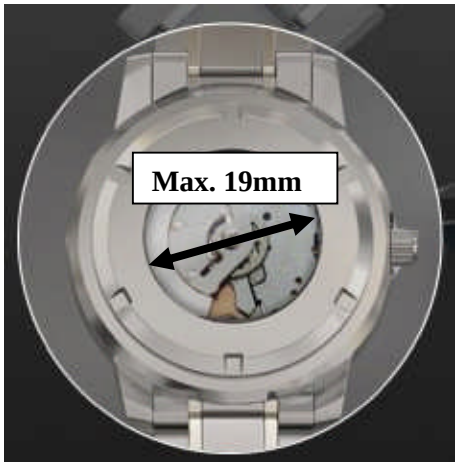
1) The glass diameter size is maximum 19mm (Refer to picture)
2) Blue or brown glass