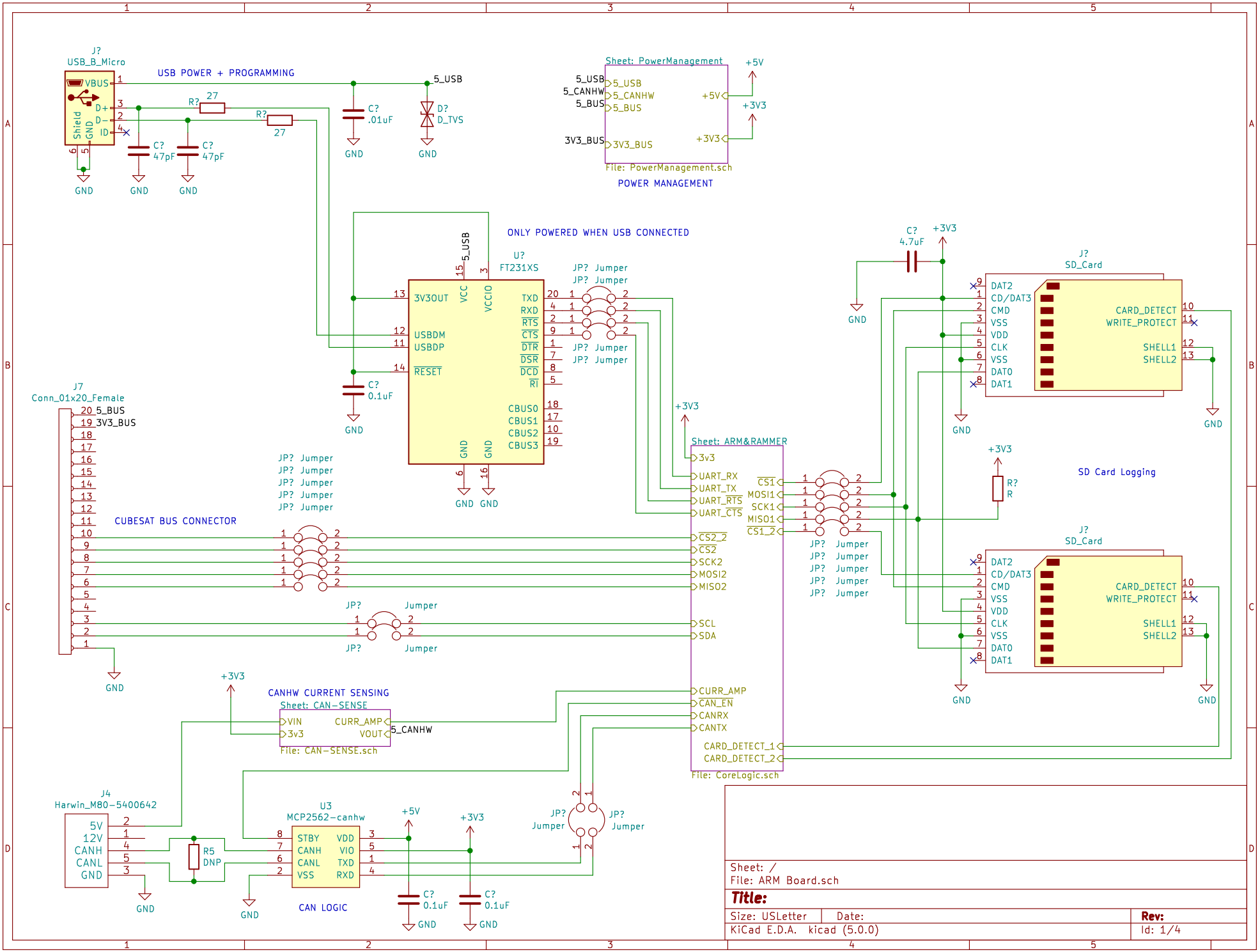
USB POWER + PROGRAMMING
J?
USB_B_Micro
VBUS
D+
D−
ID
Shield
GND
R?
27
C?
47pF
C?
.01uF
D?
D_TVS
5_USB
Sheet: PowerManagement
5_USB
5_CANHW
5_BUS
3V3_BUS
+5V
+3V3
File: PowerManagement.sch
POWER MANAGEMENT
ONLY POWERED WHEN USB CONNECTED
U?
FT231XS
3V3OUT
VCC
VCCIO
USBDM
USBDP
RESET
TXD
RXD
RTS
CTS
DTR
DSR
DCD
RI
CBUS0
CBUS1
CBUS2
CBUS3
C?
0.1uF
JP? Jumper
C?
4.7uF
J?
SD_Card
DAT2
CD/DAT3
CMD
VSS
VDD
CLK
DAT0
DAT1
CARD_DETECT
WRITE_PROTECT
SHELL1
SHELL2
J7
Conn_01x20_Female
CUBESAT BUS CONNECTOR
Sheet: ARM&RAMMER
3v3
UART_RX
UART_TX
UART_RTS
UART_CTS
CS2_2
CS2
SCK2
MOSI2
MISO2
SCL
SDA
CURR_AMP
CAN_EN
CANRX
CANTX
CARD_DETECT_1
CARD_DETECT_2
File: CoreLogic.sch
CS1
MOSI1
SCK1
MISO1
CS1_2
R?
R
SD Card Logging
CANHW CURRENT SENSING
Sheet: CAN−SENSE
VIN
3v3
CURR_AMP
VOUT
5_CANHW
File: CAN−SENSE.sch
J4
Harwin_M80−5400642
5V
12V
CANH
CANL
GND
R5
DNP
U3
MCP2562−canhw
STBY
CANH
CANL
VSS
VDD
VIO
TXD
RXD
CAN LOGIC
C?
0.1uF
Sheet: /
File: ARM Board.sch
Title:
Size: USLetter
Date:
Rev:
KiCad E.D.A. kicad (5.0.0)
Id: 1/4

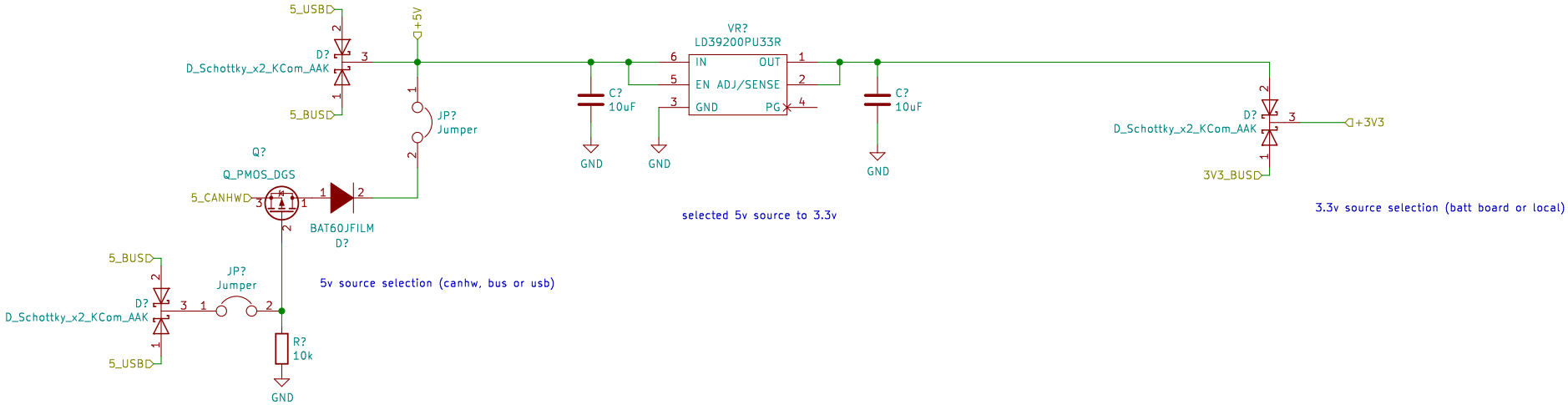

Sheet: /PowerManagement/
File: PowerManagement.sch

Title:

Size: A4	Date:	**Rev:**
KiCad E.D.A. kicad (5.0.0)		Id: 2/4

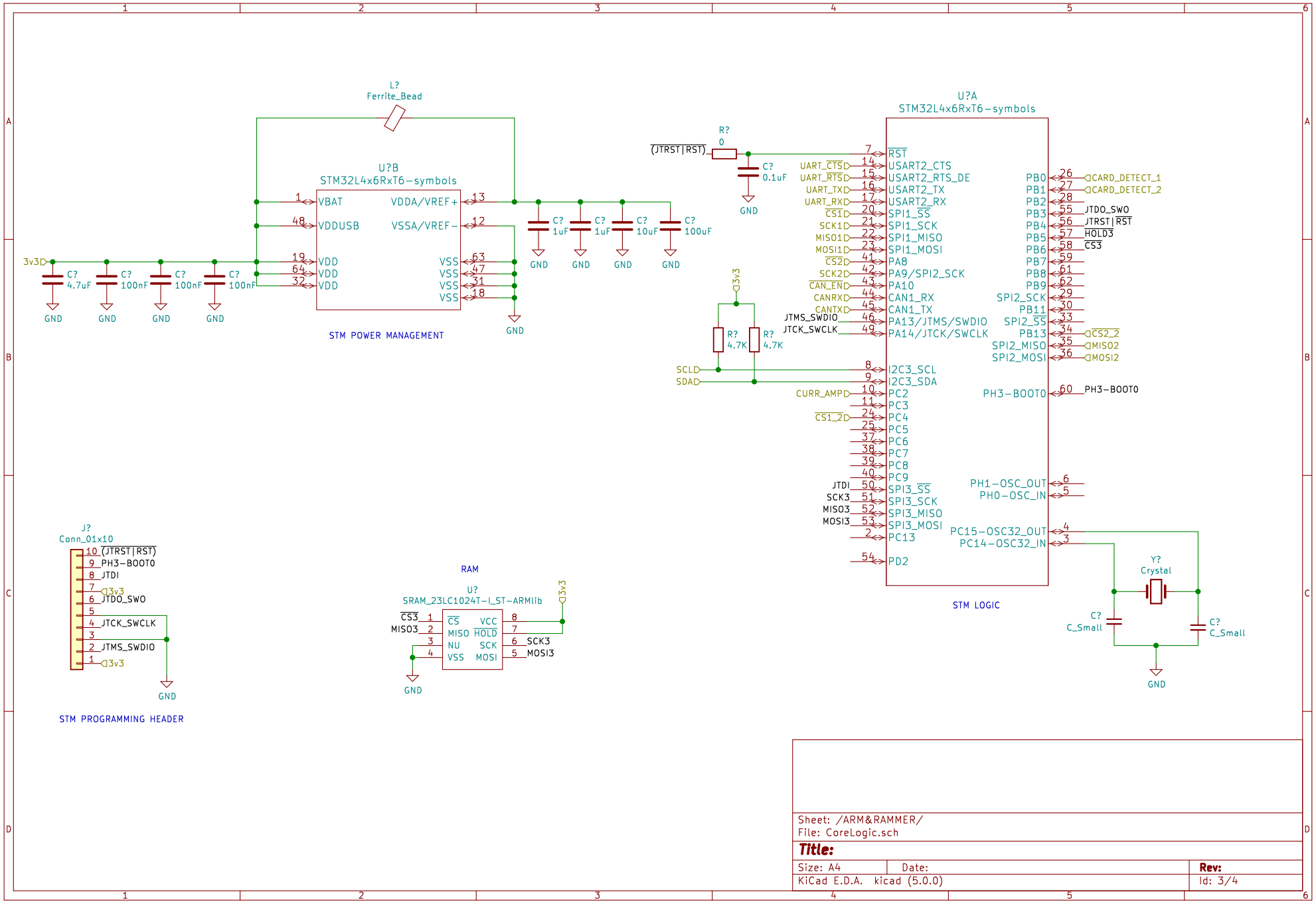
L?
Ferrite_Bead
U?B
STM32L4x6RxT6-symbols
VBAT
VDDUSB
VDD
VDD
VDD
VDDA/VREF+
VSSA/VREF-
VSS
VSS
VSS
VSS
3v3
C? 4.7uF
C? 100nF
C? 100nF
C? 100nF
GND
C? 1uF
C? 1uF
C? 10uF
C? 100uF
STM POWER MANAGEMENT
U?A
STM32L4x6RxT6-symbols
R? 0
(JTRST|RST)
C? 0.1uF
RST
USART2_CTS
USART2_RTS_DE
USART2_TX
USART2_RX
SPI1_SS
SPI1_SCK
SPI1_MISO
SPI1_MOSI
PA8
PA9/SPI2_SCK
PA10
CAN1_RX
CAN1_TX
PA13/JTMS/SWDIO
PA14/JTCK/SWCLK
I2C3_SCL
I2C3_SDA
PC2
PC3
PC4
PC5
PC6
PC7
PC8
PC9
SPI3_SS
SPI3_SCK
SPI3_MISO
SPI3_MOSI
PC13
PD2
UART_CTS
UART_RTS
UART_TX
UART_RX
CS1
SCK1
MISO1
MOSI1
CS2
SCK2
CAN_EN
CANRX
CANTX
JTMS_SWDIO
JTCK_SWCLK
SCL
SDA
CURR_AMP
CS1_2
JTDI
SCK3
MISO3
MOSI3
R? 4.7K
R? 4.7K
PB0
PB1
PB2
PB3
PB4
PB5
PB6
PB7
PB8
PB9
SPI2_SCK
PB11
SPI2_SS
PB13
SPI2_MISO
SPI2_MOSI
PH3-BOOT0
PH1-OSC_OUT
PH0-OSC_IN
PC15-OSC32_OUT
PC14-OSC32_IN
CARD_DETECT_1
CARD_DETECT_2
JTDO_SWO
JTRST|RST
HOLD3
CS3
CS2_2
MISO2
MOSI2
PH3-BOOT0
Y? Crystal
C? C_Small
C? C_Small
STM LOGIC
J? Conn_01x10
(JTRST|RST)
PH3-BOOT0
JTDI
3v3
JTDO_SWO
JTCK_SWCLK
JTMS_SWDIO
3v3
STM PROGRAMMING HEADER
RAM
U? SRAM_23LC1024T-I_ST-ARMlib
CS3
MISO3
CS
MISO
NU
VSS
VCC
HOLD
SCK
MOSI
SCK3
MOSI3
3v3
Sheet: /ARM&RAMMER/
File: CoreLogic.sch
Title:
Size: A4
Date:
Rev:
KiCad E.D.A. kicad (5.0.0)
Id: 3/4

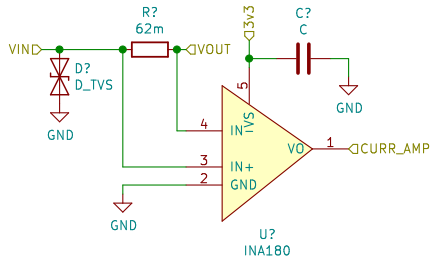

Sheet: /CAN-SENSE/
File: CAN-SENSE.sch

Title:

Size: A4	Date:	**Rev:**
KiCad E.D.A. kicad (5.0.0)		Id: 4/4