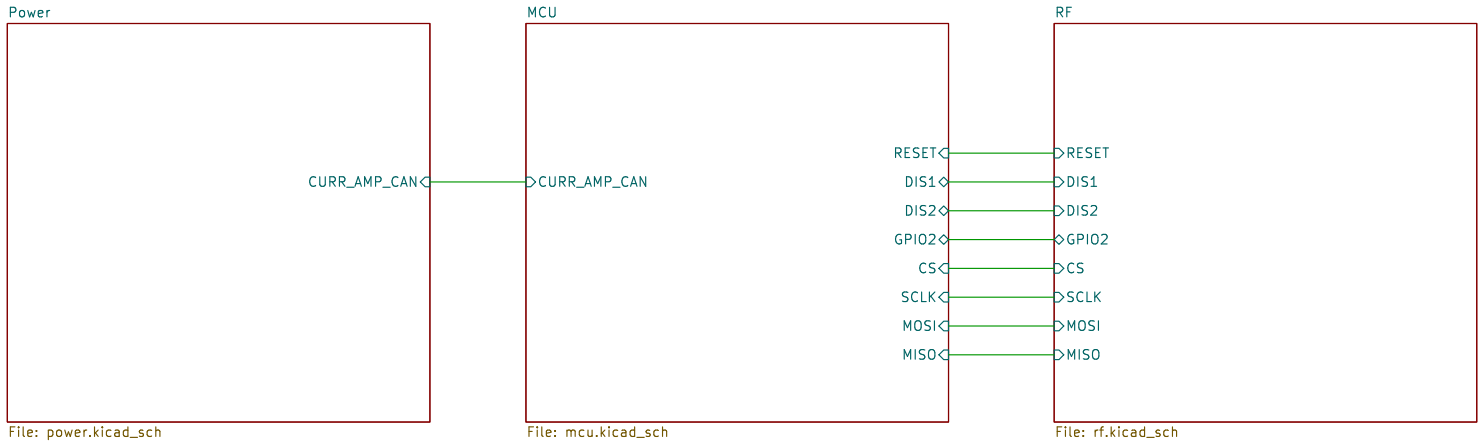

JLC04161H-7628(Standard/Finished thickness1.59mm±10%)

Rio Liu
Manav Toor
Waterloo Rocketry

Sheet: /
File: LTT.kicad_sch

Title: Live Telemetry Transmitter

Size: A4	Date: 2026-03-12	**Rev: 2**
KiCad E.D.A. 9.0.5		Id: 1/4

Standard Waterloo Rocketry PIC18 Setup

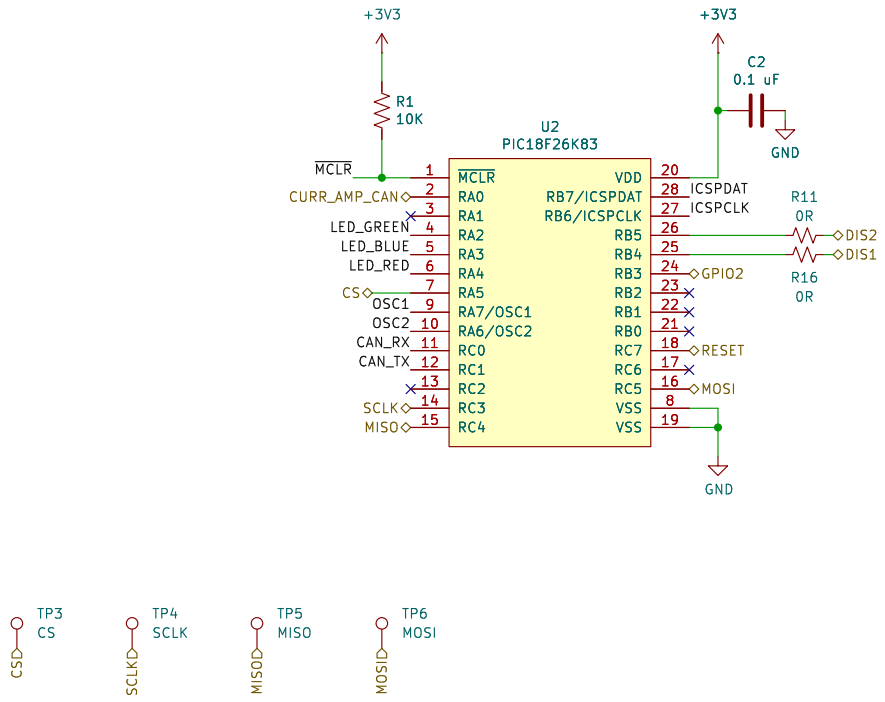

Programming Header

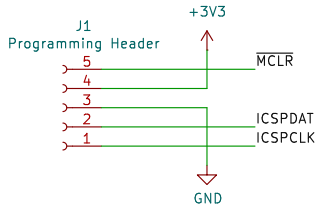

Crystal

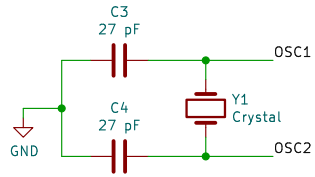

Programmable Test LED's

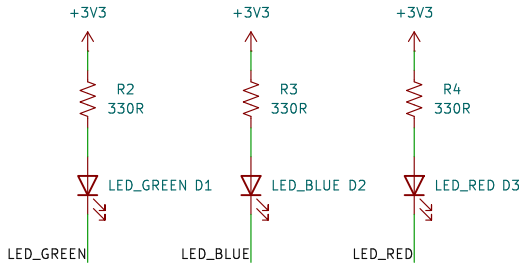

CAN

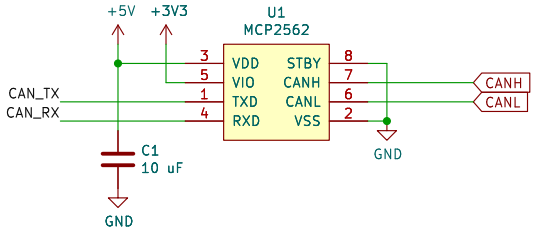

Manav Toor
Waterloo Rocketry

Sheet: /MCU/
File: mcu.kicad_sch

Title: Live Telemetry Transmitter

Size: A4	Date: 2026-03-12	**Rev: 2**
KiCad E.D.A. 9.0.5		Id: 2/4

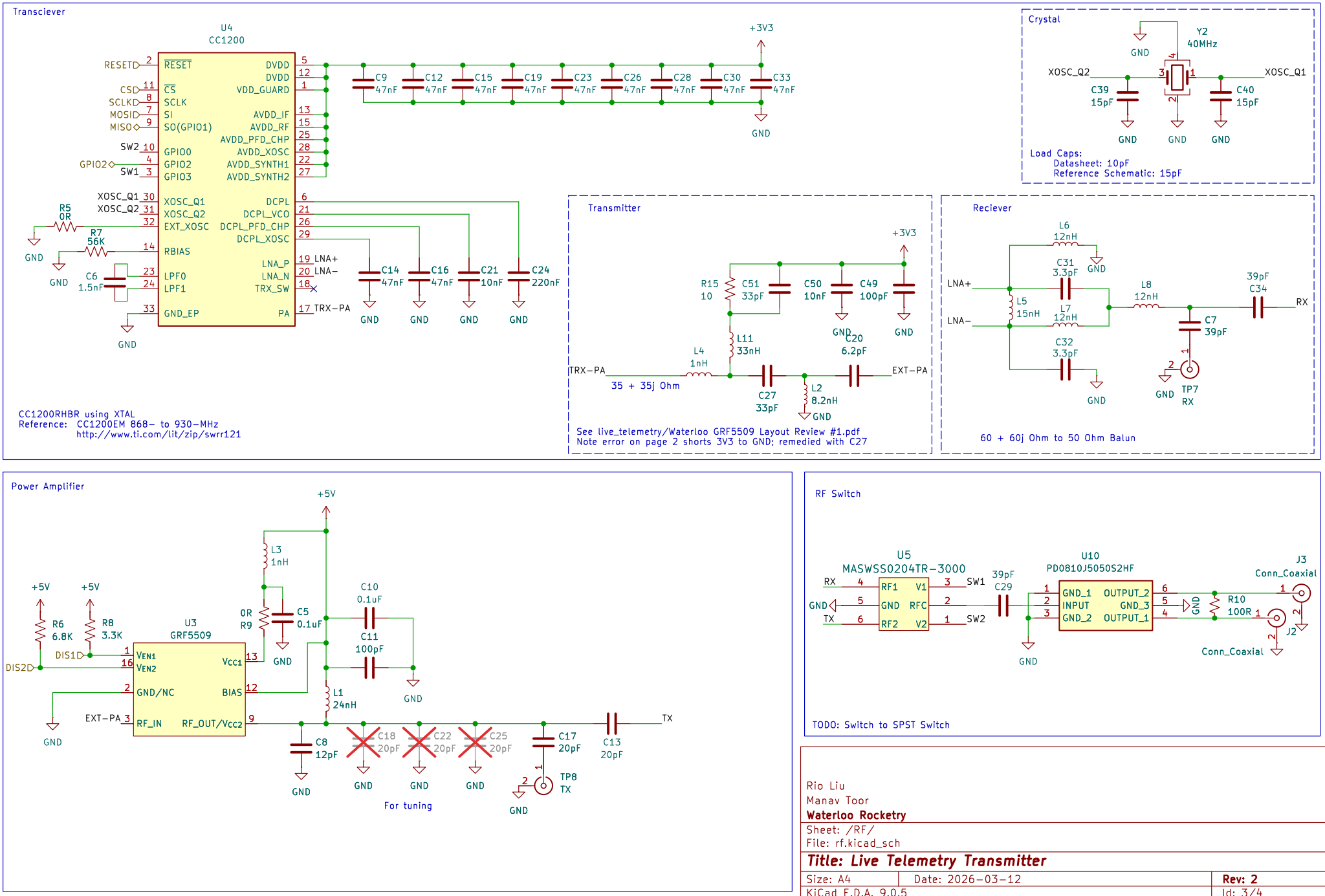
Transciever
U4
CC1200
RESET
CS
SCLK
SI
SO(GPIO1)
GPIO0
GPIO2
GPIO3
XOSC_Q1
XOSC_Q2
EXT_XOSC
RBIAS
LPF0
LPF1
GND_EP
DVDD
VDD_GUARD
AVDD_IF
AVDD_RF
AVDD_PFD_CHP
AVDD_XOSC
AVDD_SYNTH1
AVDD_SYNTH2
DCPL
DCPL_VCO
DCPL_PFD_CHP
DCPL_XOSC
LNA_P
LNA_N
TRX_SW
PA
SW2
SW1
LNA+
LNA−
TRX−PA
+3V3
GND
C9 47nF
C12 47nF
C15 47nF
C19 47nF
C23 47nF
C26 47nF
C28 47nF
C30 47nF
C33 47nF
R5 0R
R7 56K
C6 1.5nF
C14 47nF
C16 47nF
C21 10nF
C24 220nF
CC1200RHBR using XTAL
Reference: CC1200EM 868- to 930-MHz
http://www.ti.com/lit/zip/swrr121
Crystal
Y2
40MHz
XOSC_Q2
XOSC_Q1
C39 15pF
C40 15pF
Load Caps:
Datasheet: 10pF
Reference Schematic: 15pF
Transmitter
R15 10
C51 33pF
C50 10nF
C49 100pF
C20 6.2pF
L11 33nH
L4 1nH
C27 33pF
L2 8.2nH
TRX−PA
EXT−PA
35 + 35j Ohm
See live_telemetry/Waterloo GRF5509 Layout Review #1.pdf
Note error on page 2 shorts 3V3 to GND; remedied with C27
Reciever
L6 12nH
C31 3.3pF
L5 15nH
L7 12nH
C32 3.3pF
L8 12nH
C7 39pF
39pF C34
RX
TP7
60 + 60j Ohm to 50 Ohm Balun
Power Amplifier
+5V
L3 1nH
R6 6.8K
R8 3.3K
DIS1
DIS2
U3
GRF5509
VEN1
VEN2
GND/NC
RF_IN
Vcc1
BIAS
RF_OUT/Vcc2
EXT−PA
0R R9
C5 0.1uF
C10 0.1uF
C11 100pF
L1 24nH
C8 12pF
C18 20pF
C22 20pF
C25 20pF
C17 20pF
C13 20pF
TX
TP8
For tuning
RF Switch
U5
MASWSS0204TR−3000
RF1
GND
RF2
V1
RFC
V2
RX
TX
SW1
SW2
39pF C29
U10
PD0810J5050S2HF
GND_1
INPUT
GND_2
OUTPUT_2
GND_3
OUTPUT_1
R10 100R
J3
Conn_Coaxial
J2
TODO: Switch to SPST Switch
Rio Liu
Manav Toor
Waterloo Rocketry
Sheet: /RF/
File: rf.kicad_sch
Title: Live Telemetry Transmitter
Size: A4
Date: 2026-03-12
Rev: 2
KiCad E.D.A. 9.0.5
Id: 3/4

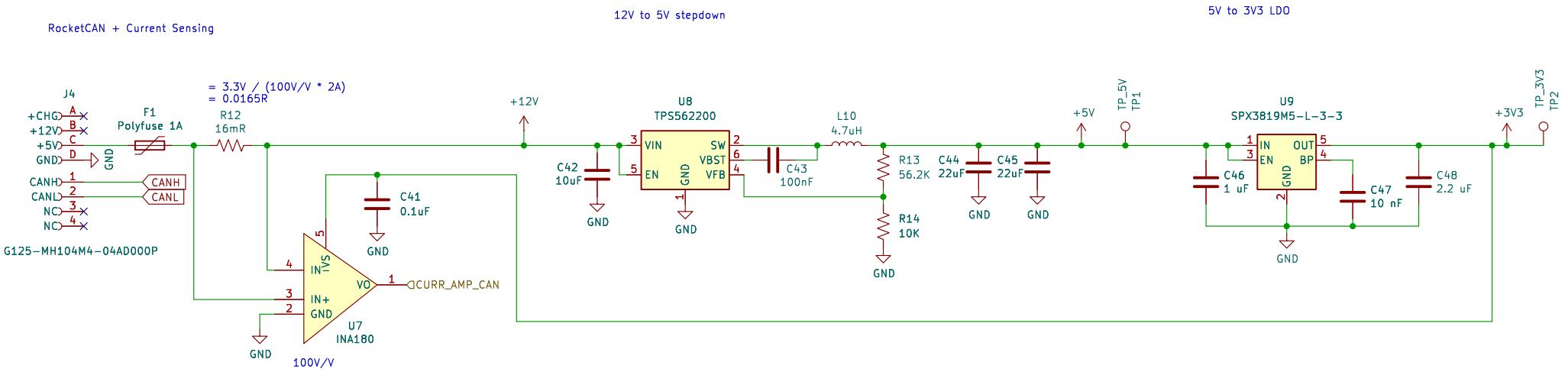

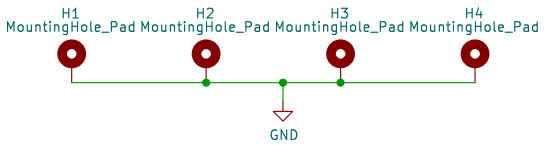

Manav Toor
Waterloo Rocketry

Sheet: /Power/
File: power.kicad_sch

Title: Live Telemetry Transmitter

Size: A4	Date: 2026-03-12	**Rev: 2**
KiCad E.D.A. 9.0.5		Id: 4/4