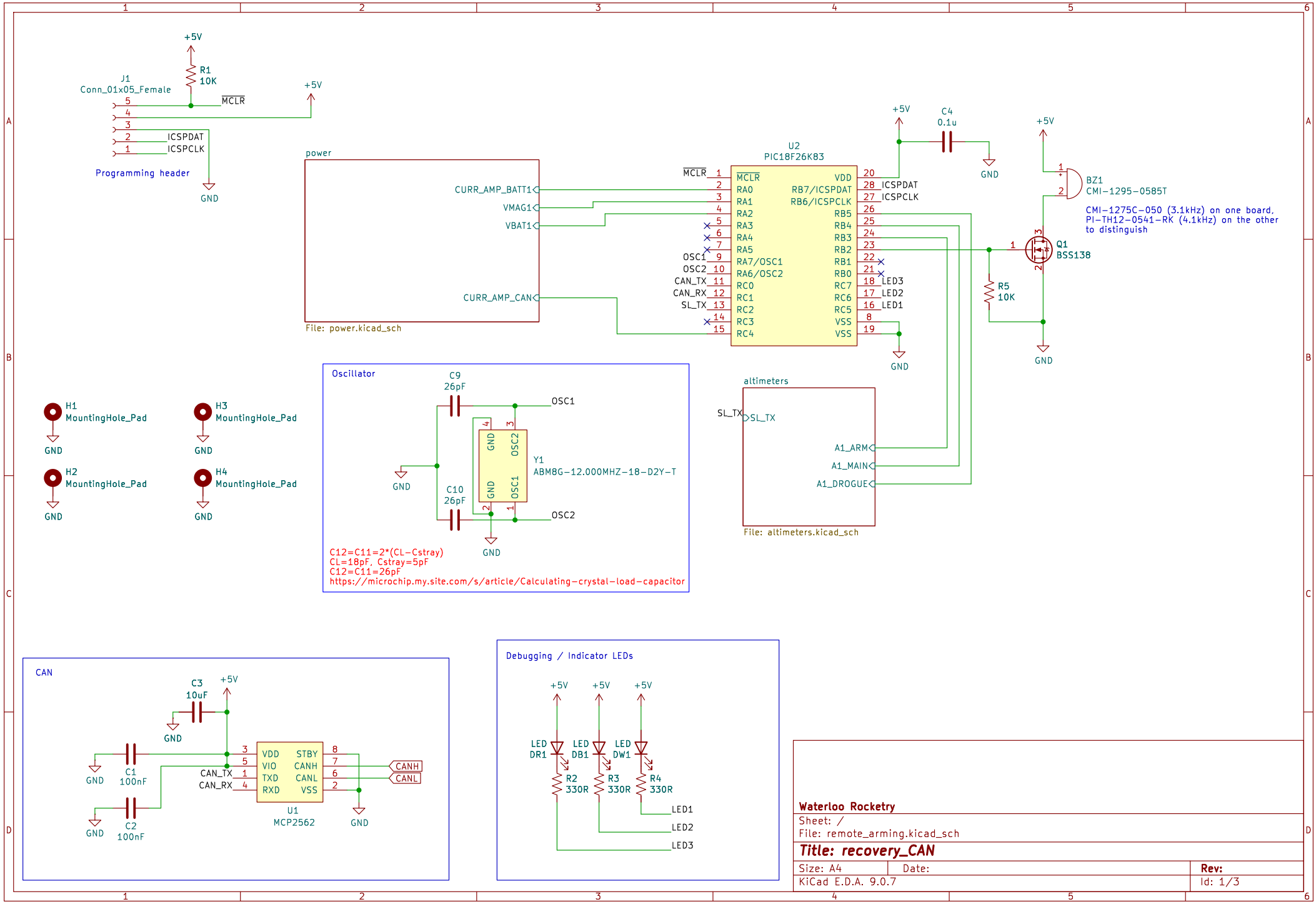
J1
Conn_01x05_Female
Programming header
R1
10K
+5V
MCLR
ICSPDAT
ICSPCLK
GND
power
CURR_AMP_BATT1
VMAG1
VBAT1
CURR_AMP_CAN
File: power.kicad_sch
U2
PIC18F26K83
MCLR
RA0
RA1
RA2
RA3
RA4
RA5
RA7/OSC1
RA6/OSC2
RC0
RC1
RC2
RC3
RC4
VDD
RB7/ICSPDAT
RB6/ICSPCLK
RB5
RB4
RB3
RB2
RB1
RB0
RC7
RC6
RC5
VSS
VSS
OSC1
OSC2
CAN_TX
CAN_RX
SL_TX
LED3
LED2
LED1
C4
0.1u
BZ1
CMI-1295-0585T
CMI-1275C-050 (3.1kHz) on one board,
PI-TH12-0541-RK (4.1kHz) on the other
to distinguish
Q1
BSS138
R5
10K
H1
MountingHole_Pad
H2
MountingHole_Pad
H3
MountingHole_Pad
H4
MountingHole_Pad
Oscillator
C9
26pF
C10
26pF
Y1
ABM8G-12.000MHZ-18-D2Y-T
OSC1
OSC2
C12=C11=2*(CL-Cstray)
CL=18pF, Cstray=5pF
C12=C11=26pF
https://microchip.my.site.com/s/article/Calculating-crystal-load-capacitor
altimeters
SL_TX
A1_ARM
A1_MAIN
A1_DROGUE
File: altimeters.kicad_sch
CAN
C3
10uF
C1
100nF
C2
100nF
VDD
VIO
TXD
RXD
STBY
CANH
CANL
VSS
U1
MCP2562
Debugging / Indicator LEDs
LED
DR1
LED
DB1
LED
DW1
R2
330R
R3
330R
R4
330R
LED1
LED2
LED3
Waterloo Rocketry
Sheet: /
File: remote_arming.kicad_sch
Title: recovery_CAN
Size: A4
Date:
Rev:
KiCad E.D.A. 9.0.7
Id: 1/3

Battery Input

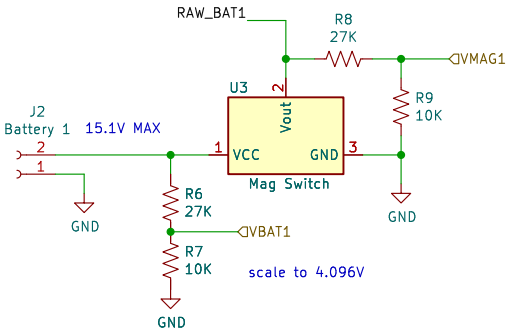

Battery to 5V LDO

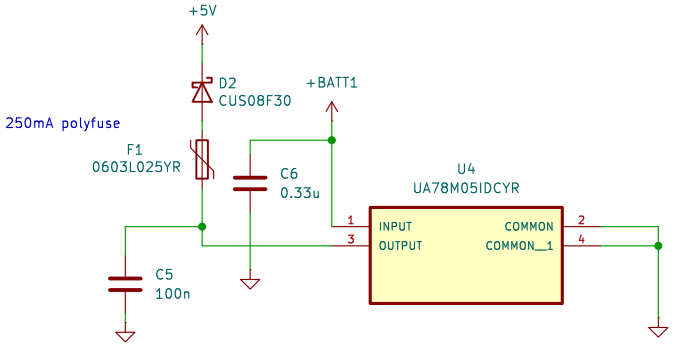

Current Sensing

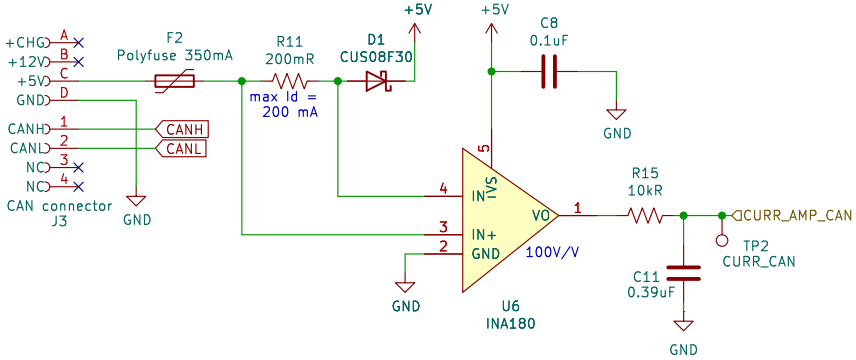

Low pass filter because
there may be noise from
being underneath buzzers
f_c = 1/(2pi*R*C)
= 1/(2pi*10kR*0.39uF)
= ~40.8 Hz

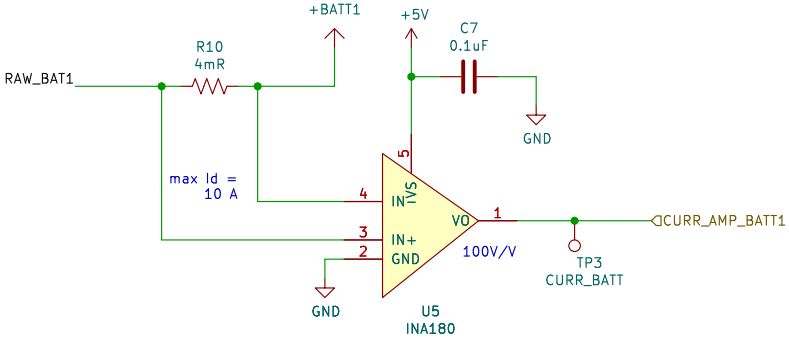

Sheet: /power/
File: power.kicad_sch

Title:

Size: A4	Date:	Rev:
KiCad E.D.A. 9.0.7		Id: 2/3

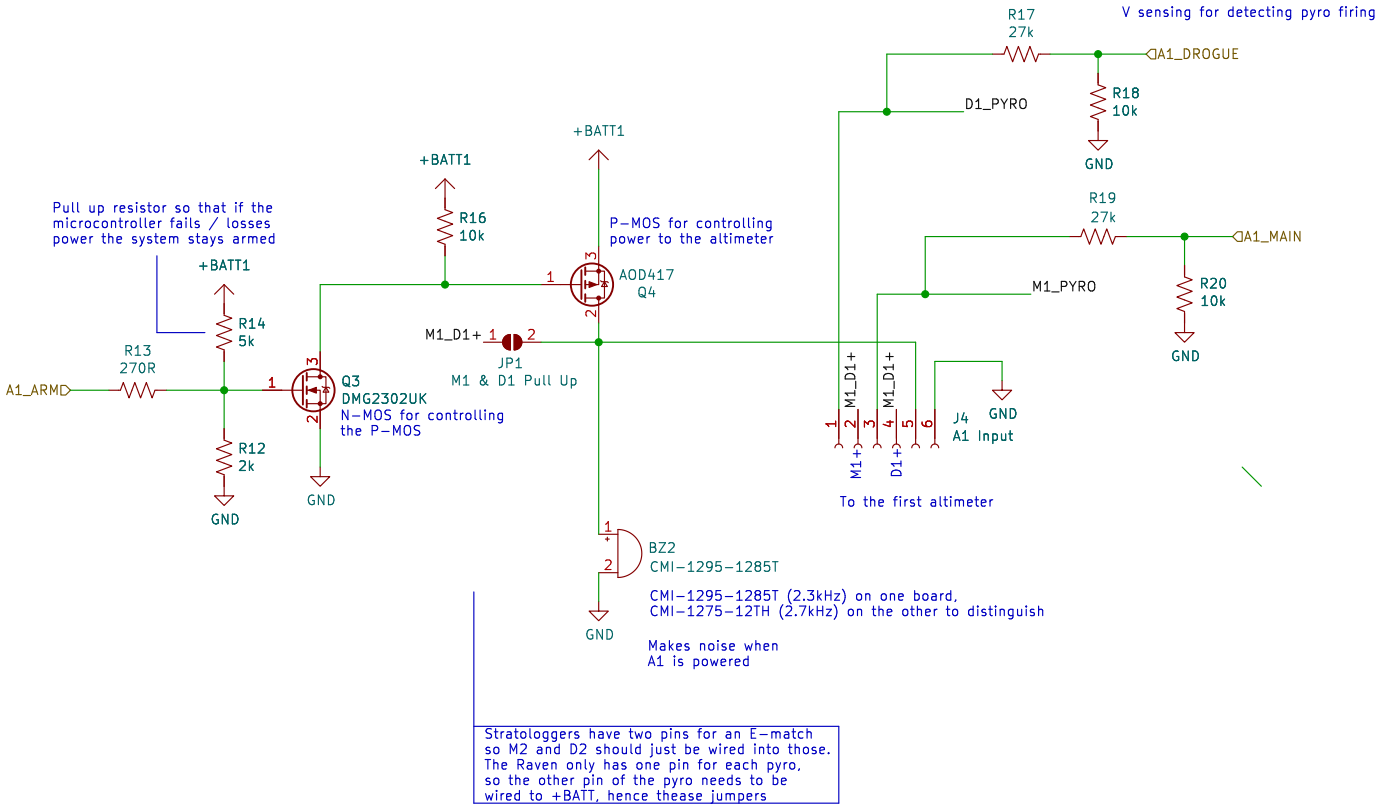

logic level shifting

recives altitude data from the stratologger over UART

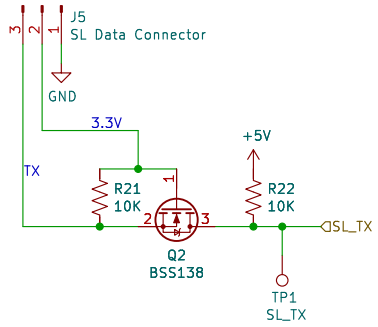

Connectors for the E-matches
The jumpers alow the two lines to be tied together so each altimeter fires all the E-matches

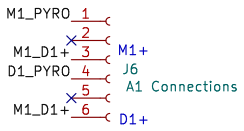

Sheet: /altimeters/
File: altimeters.kicad_sch

Title:

Size: A4	Date:	Rev:
KiCad E.D.A. 9.0.7		Id: 3/3