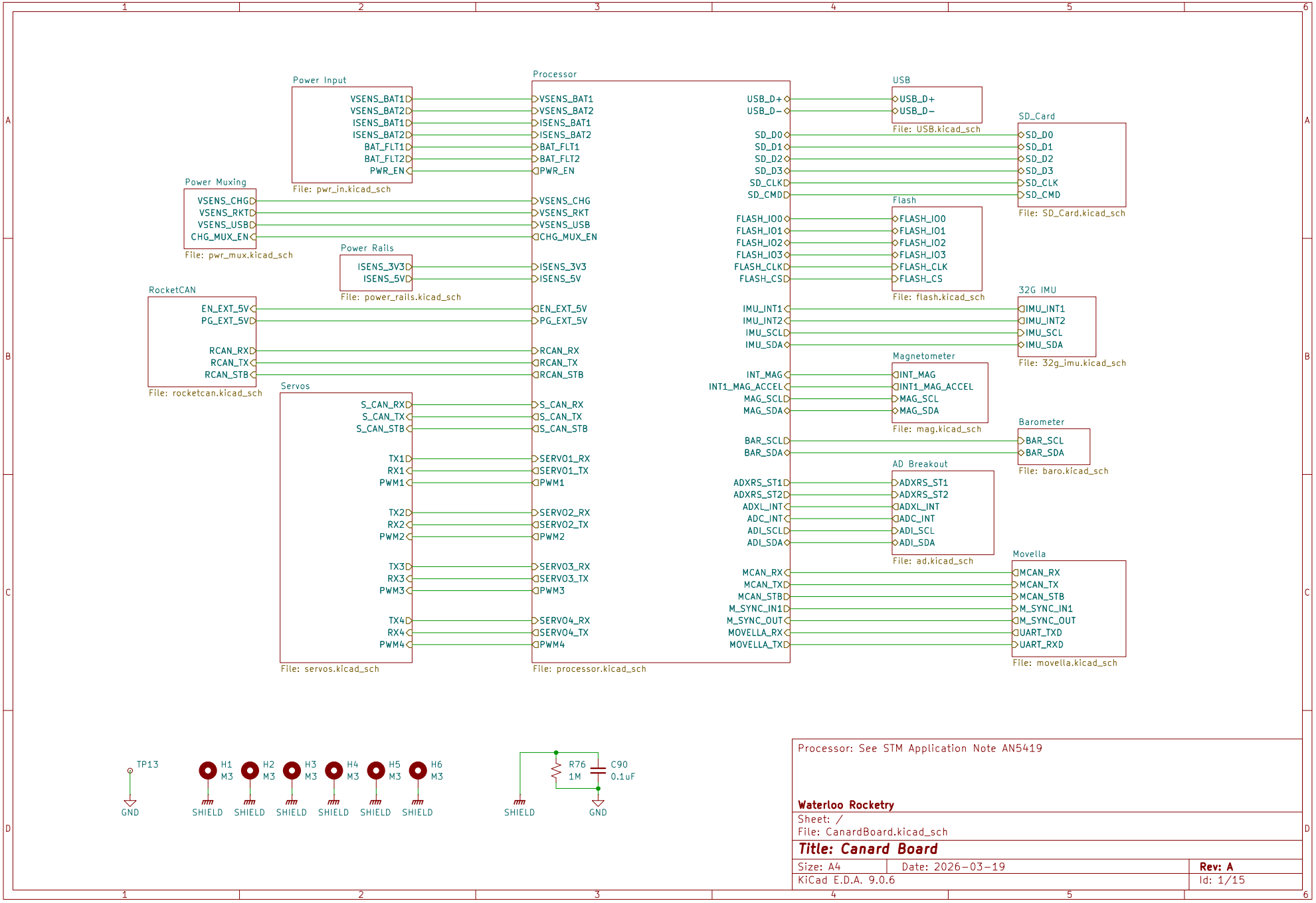

Processor: See STM Application Note AN5419

Waterloo Rocketry

Sheet: /
File: CanardBoard.kicad_sch

Title: Canard Board

Size: A4	Date: 2026-03-19	**Rev: A**
KiCad E.D.A. 9.0.6		Id: 1/15

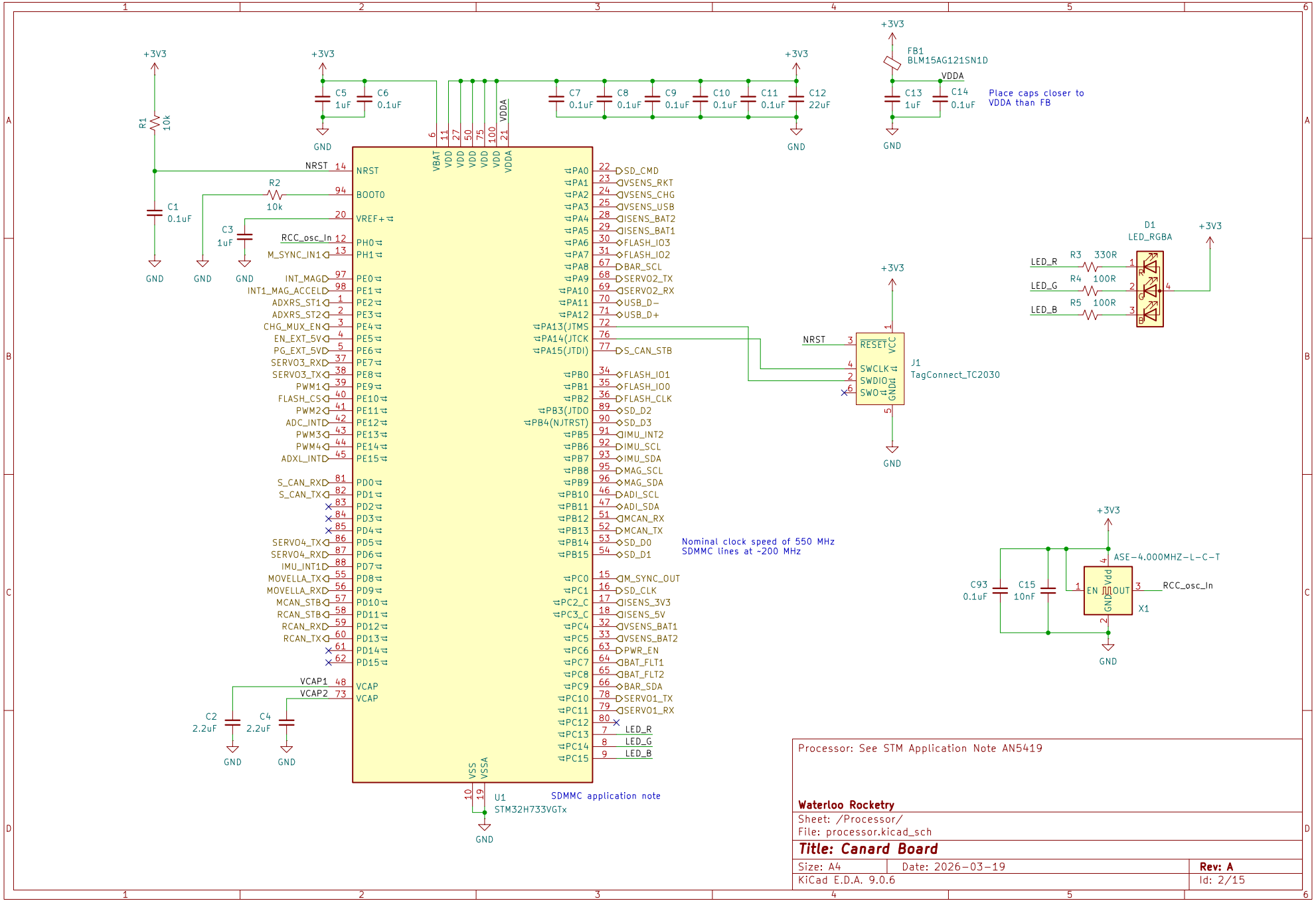

Processor: See STM Application Note AN5419

Waterloo Rocketry

Sheet: /Processor/

File: processor.kicad_sch

Title: Canard Board

Size: A4	Date: 2026-03-19	**Rev: A**
KiCad E.D.A. 9.0.6		Id: 2/15

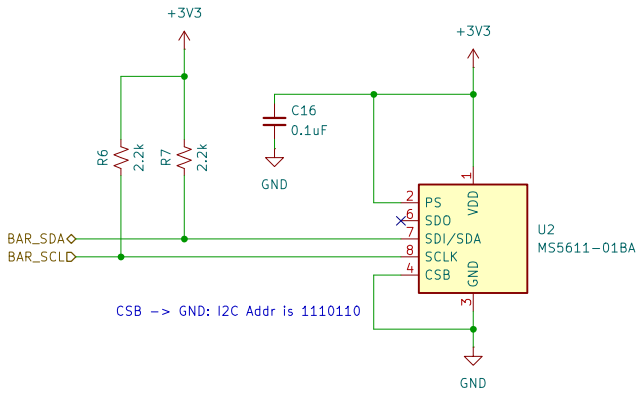

Processor: See STM Application Note AN5419

Waterloo Rocketry

Sheet: /Barometer/
File: baro.kicad_sch

Title: Canard Board

Size: A4	Date: 2026-03-19	**Rev: A**
KiCad E.D.A. 9.0.6		Id: 3/15

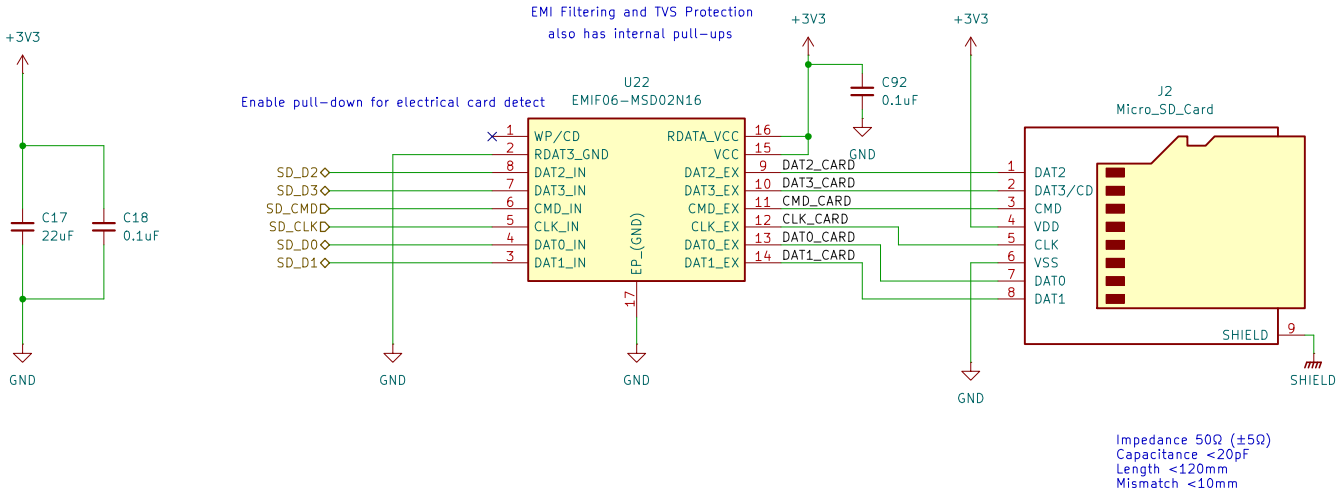

Impedance 50Ω (±5Ω)
Capacitance <20pF
Length <120mm
Mismatch <10mm

Processor: See STM Application Note AN5419

Waterloo Rocketry

Sheet: /SD_Card/
File: SD_Card.kicad_sch

Title: Canard Board

Size: A4	Date: 2026-03-19	**Rev: A**
KiCad E.D.A. 9.0.6		Id: 4/15

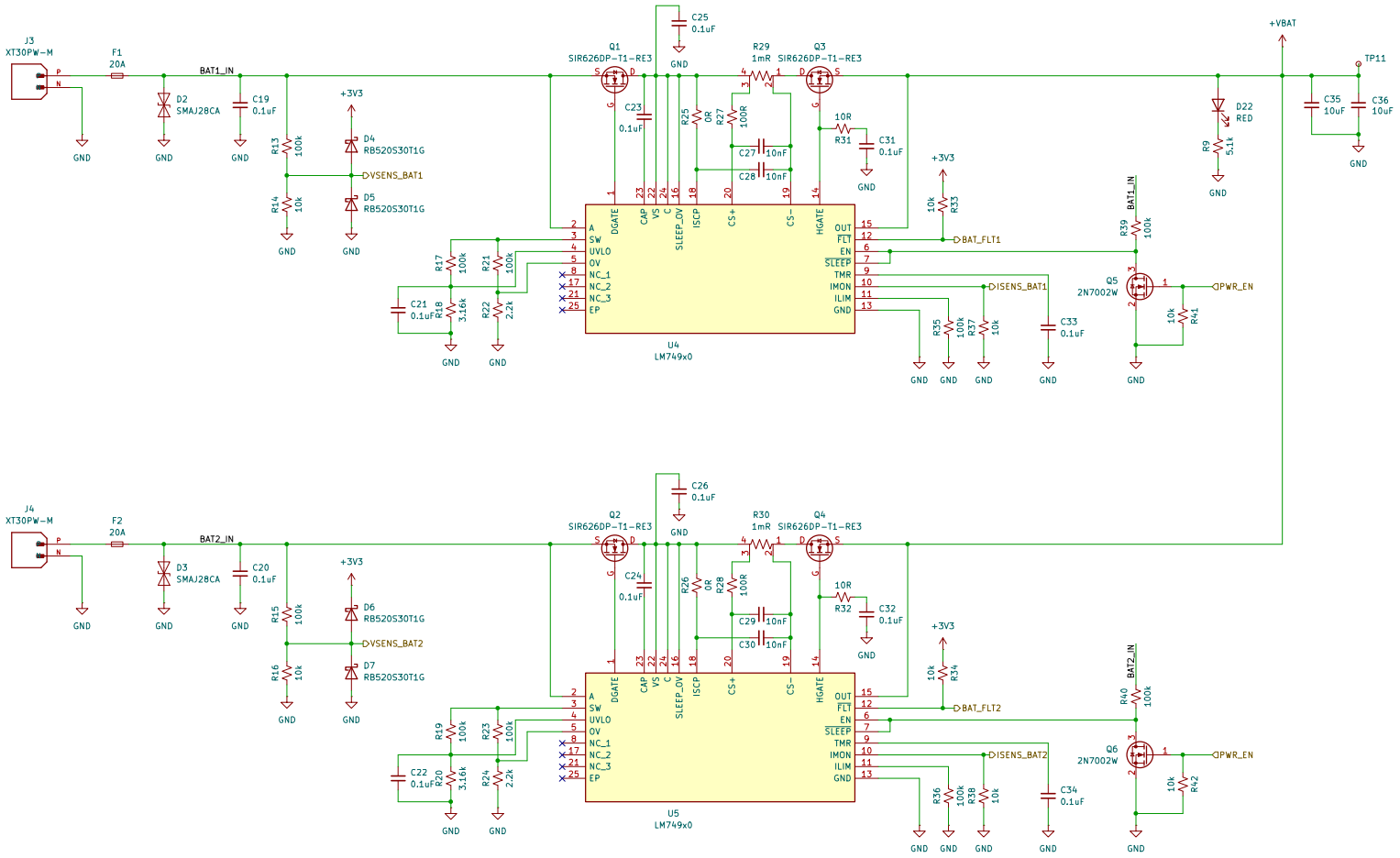

Processor: See STM Application Note AN5419

Waterloo Rocketry

Sheet: /Power Input/
File: pwr_in.kicad_sch

Title: Canard Board

Size: A3	Date: 2026-03-19	**Rev: A**
KiCad E.D.A. 9.0.6		Id: 5/15

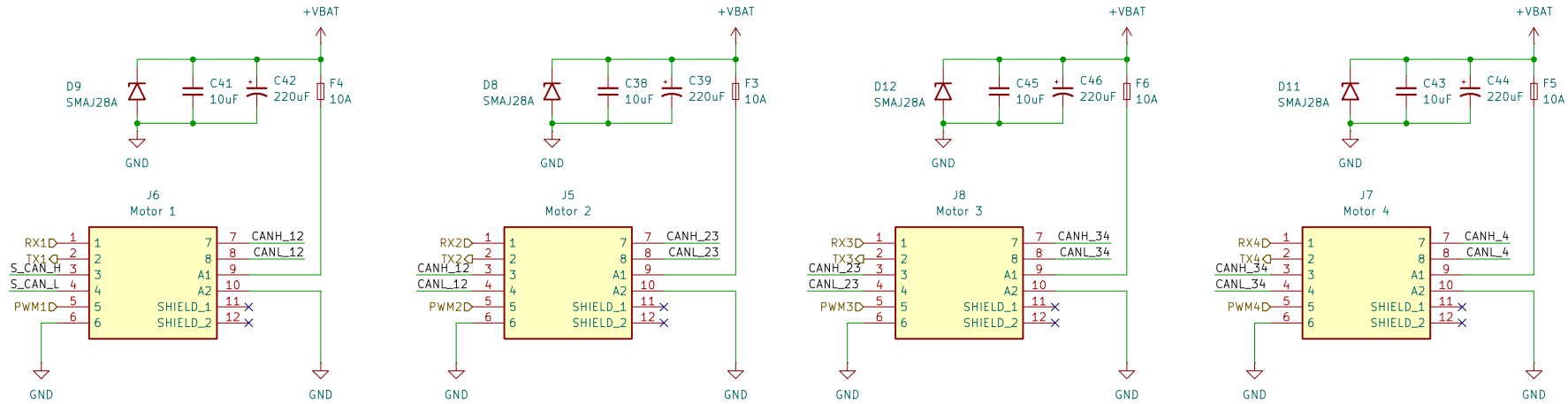

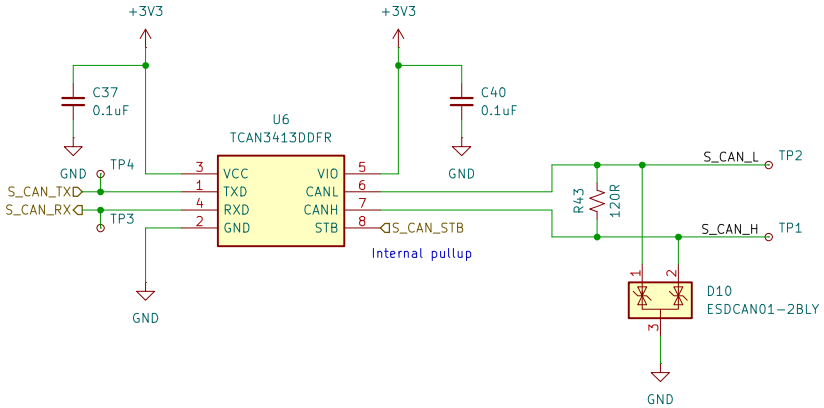

Bridge CAN lines for unused motor connectors

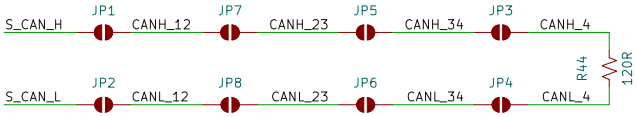

Processor: See STM Application Note AN5419

Waterloo Rocketry

Sheet: /Servos/
File: servos.kicad_sch

Title: Canard Board

Size: A4	Date: 2026-03-19	**Rev: A**
KiCad E.D.A. 9.0.6		Id: 6/15

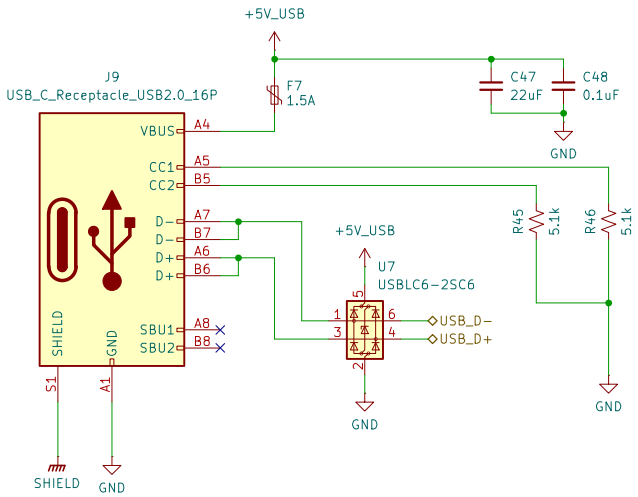

Sheet: /USB/
File: USB.kicad_sch

Title:

Size: A4	Date: 2026−03−19	**Rev: A**
KiCad E.D.A. 9.0.6		Id: 7/15

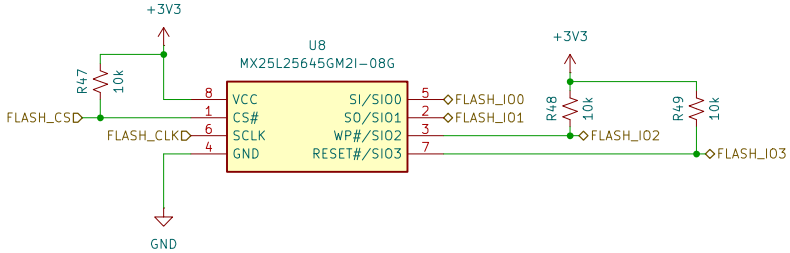

Sheet: /Flash/
File: flash.kicad_sch

Title:

Size: A4	Date: 2026-03-19	**Rev: A**
KiCad E.D.A. 9.0.6		Id: 8/15

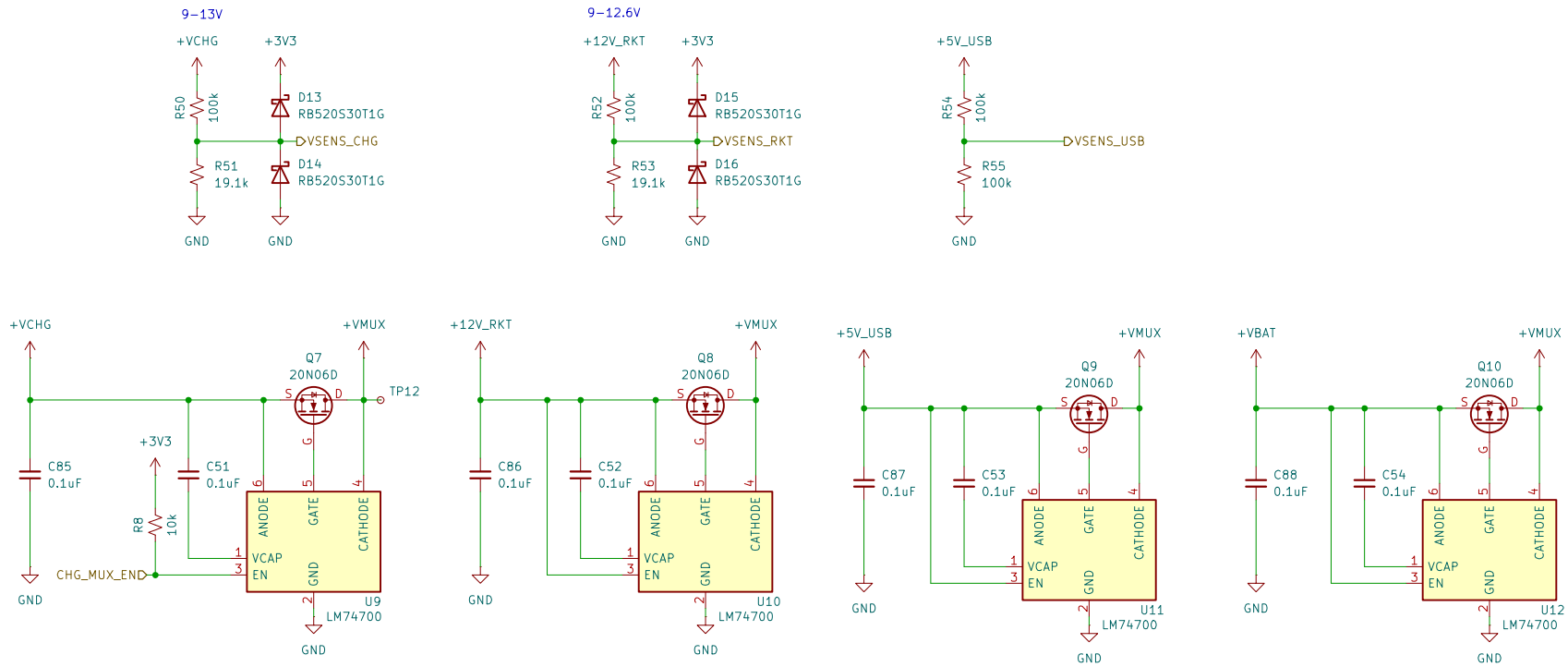

Sheet: /Power Muxing/
File: pwr_mux.kicad_sch

Title:

Size: A4	Date: 2026-03-19	**Rev: A**
KiCad E.D.A. 9.0.6		Id: 9/15

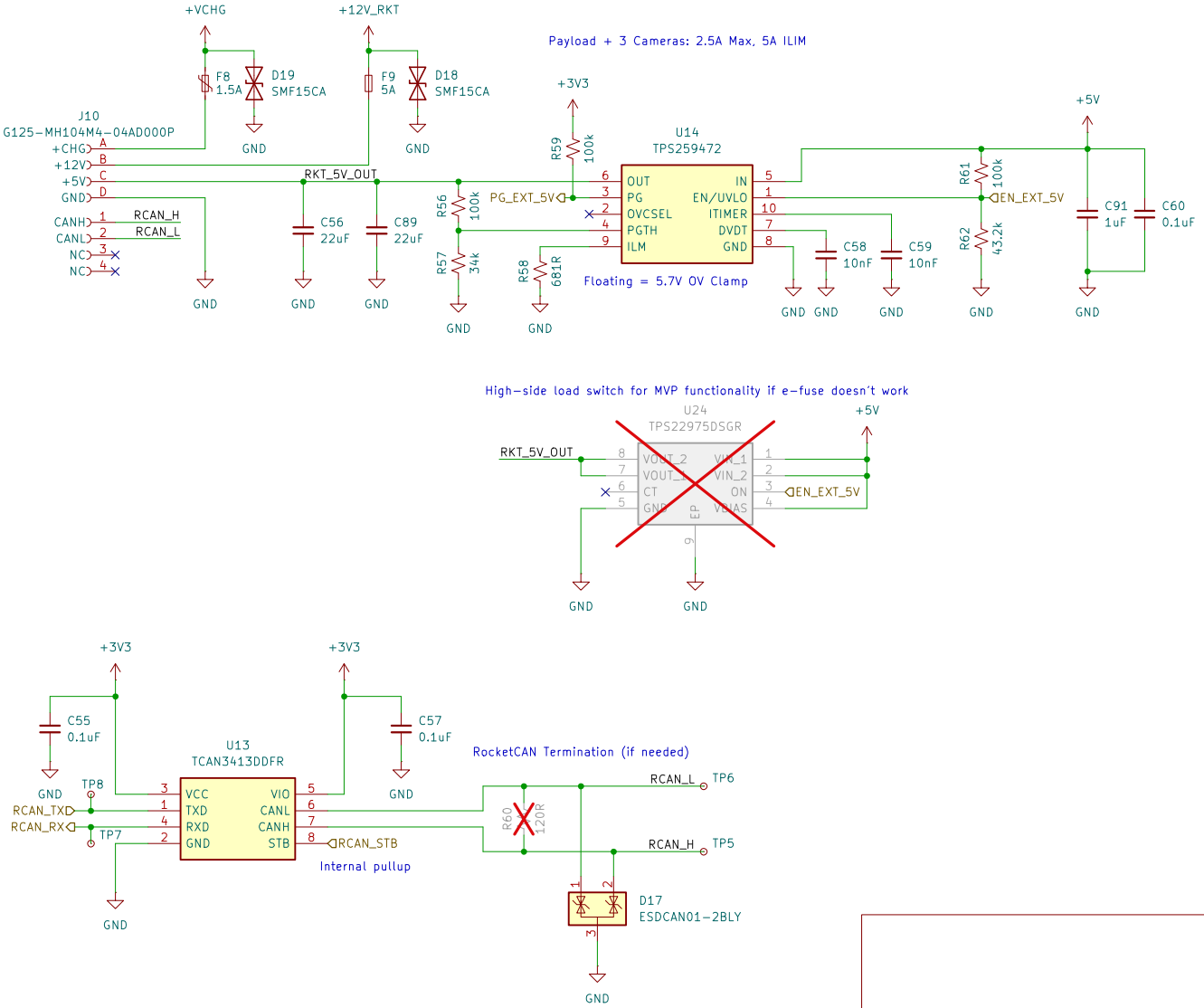

Sheet: /RocketCAN/
File: rocketcan.kicad_sch

Title:

Size: A4	Date: 2026-03-19	**Rev: A**
KiCad E.D.A. 9.0.6		Id: 10/15

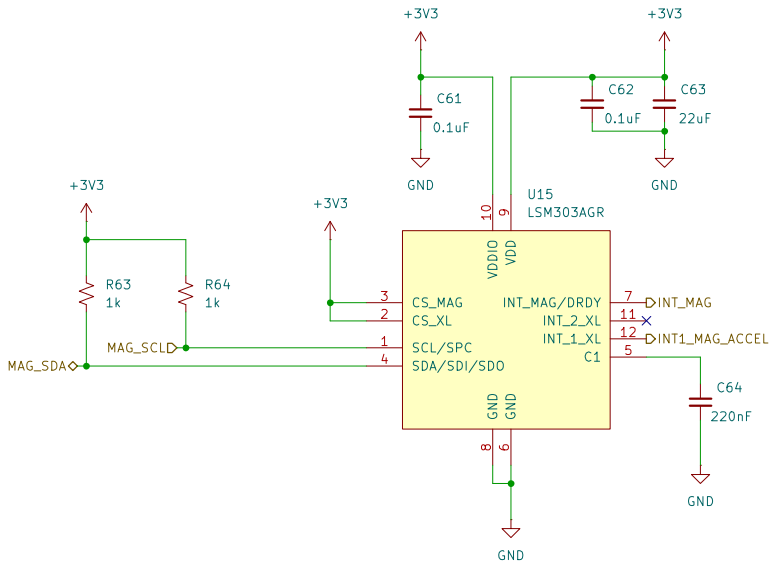

IIS2MDC also works, just doesn't have the accel

Sheet: /Magnetometer/
File: mag.kicad_sch

Title:

Size: A4	Date: 2026-03-19	**Rev: A**
KiCad E.D.A. 9.0.6		Id: 11/15

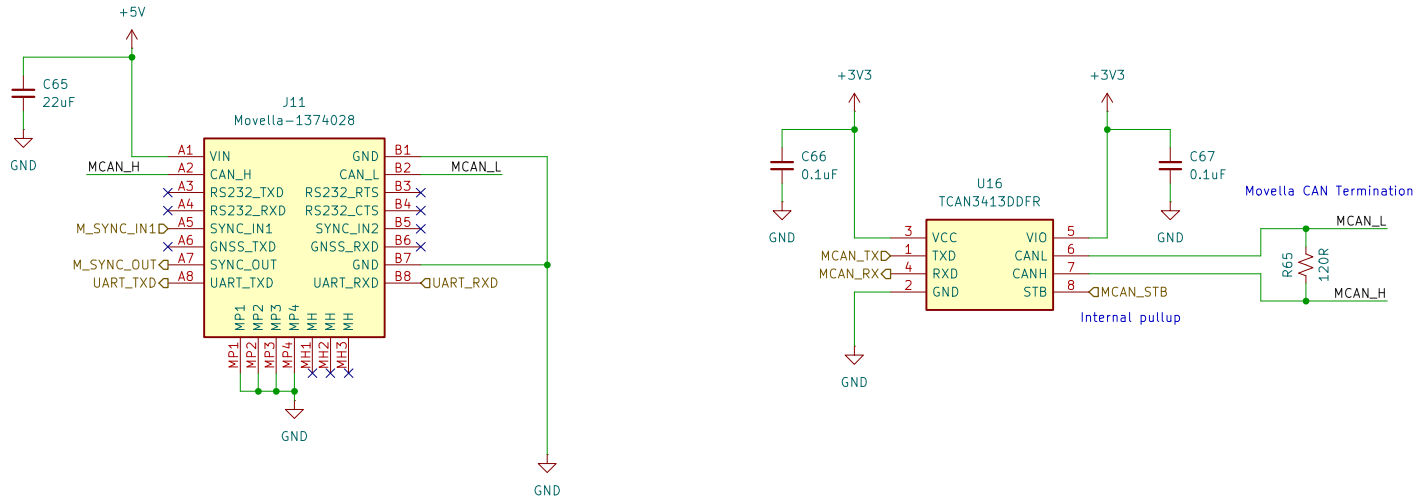

Sheet: /Movella/
File: movella.kicad_sch

Title:

Size: A4	Date: 2026-03-19	**Rev: A**
KiCad E.D.A. 9.0.6		Id: 12/15

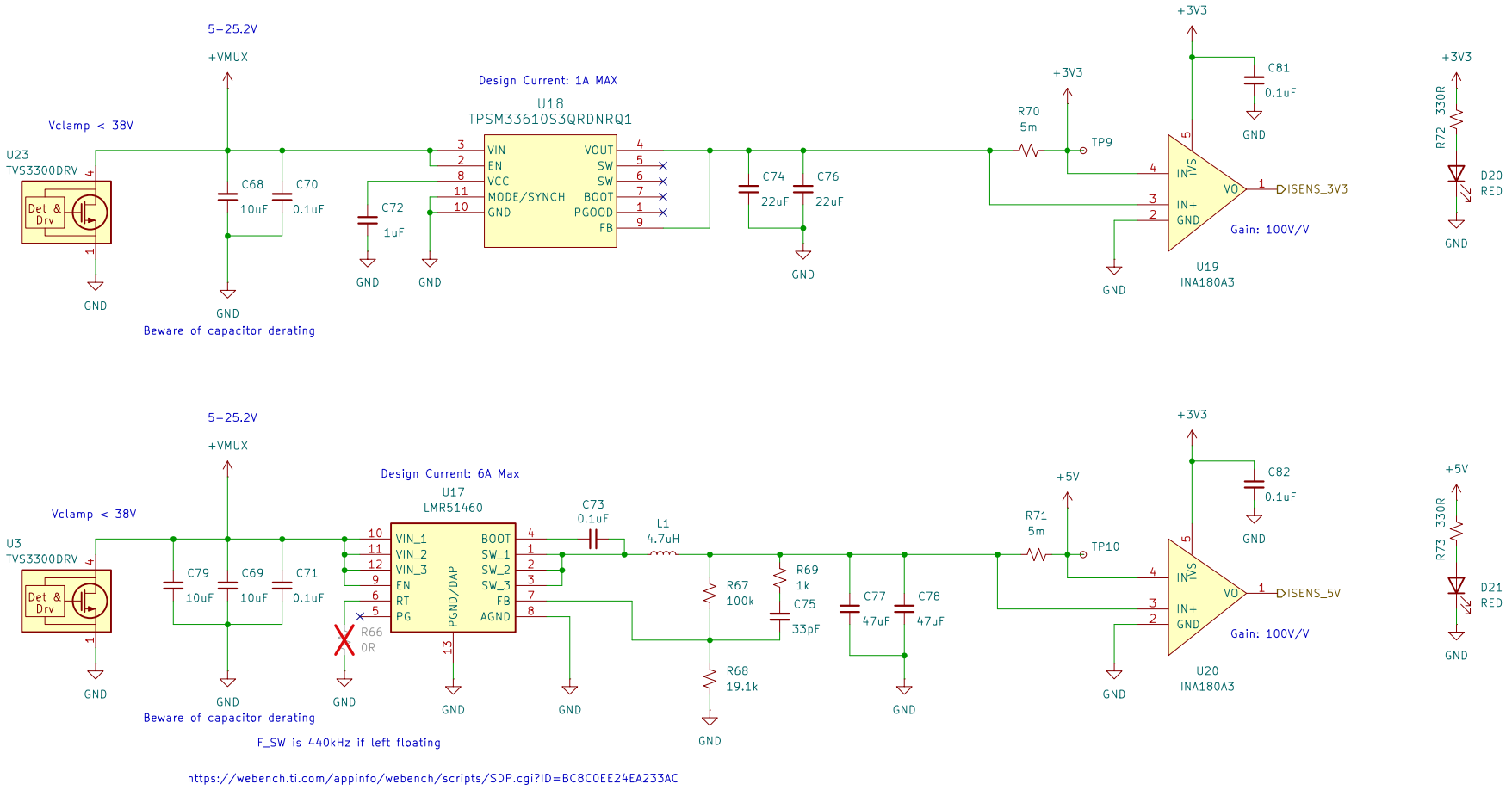

Sheet: /Power Rails/
File: power_rails.kicad_sch

Title:

Size: A4	Date: 2026-03-19	**Rev: A**
KiCad E.D.A. 9.0.6		Id: 13/15

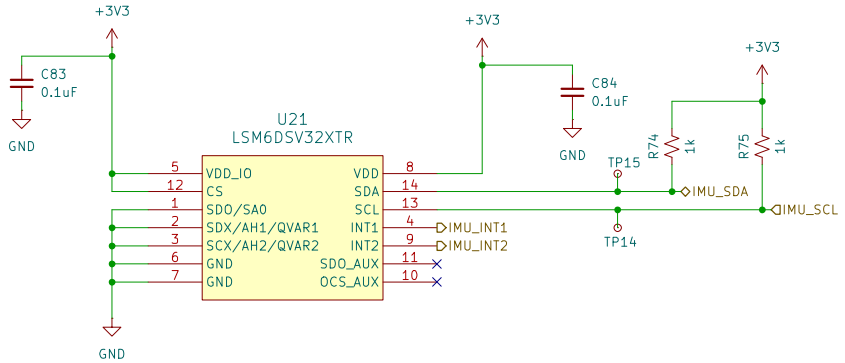

Sheet: /32G IMU/
File: 32g_imu.kicad_sch

Title:

Size: A4	Date: 2026-03-19	**Rev: A**
KiCad E.D.A. 9.0.6		Id: 14/15

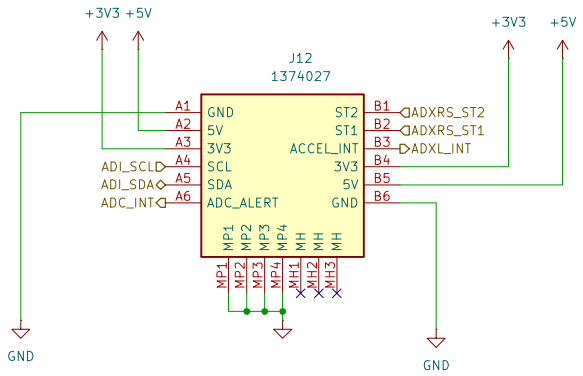

I2C pullups on breakout board

Sheet: /AD Breakout/
File: ad.kicad_sch

Title:

Size: A4	Date: 2026-03-19	**Rev: A**
KiCad E.D.A. 9.0.6		Id: 15/15