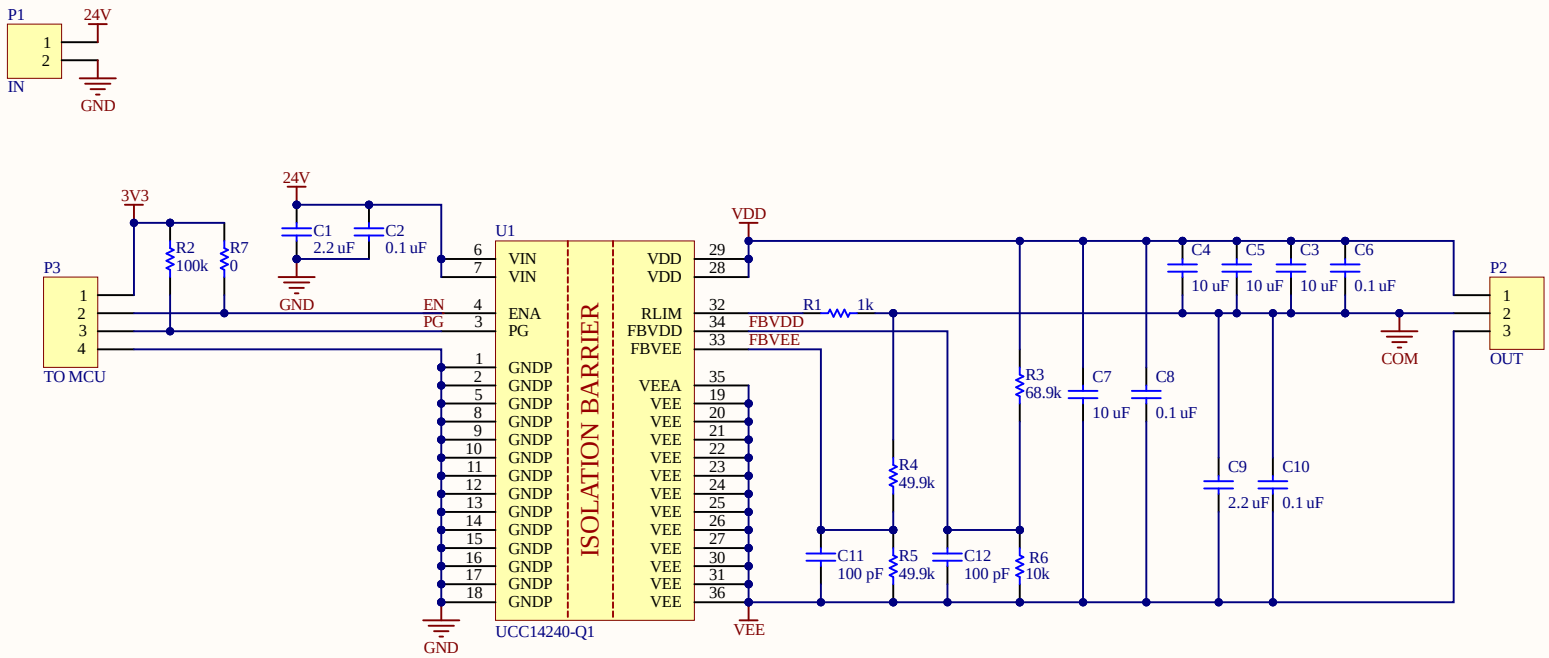

Title: *UCC14240 Breakout Board*		**Waterloop** University of Waterloo 200 University Ave W Waterloo, ON N2L 3G1
Size: A4	Author: Chawthri K	
Date: 2021-10-19	Revision: 1.0	Sheet 1 of 1
File: UCC14240 Test Board.SchDoc		

WATERLOOP

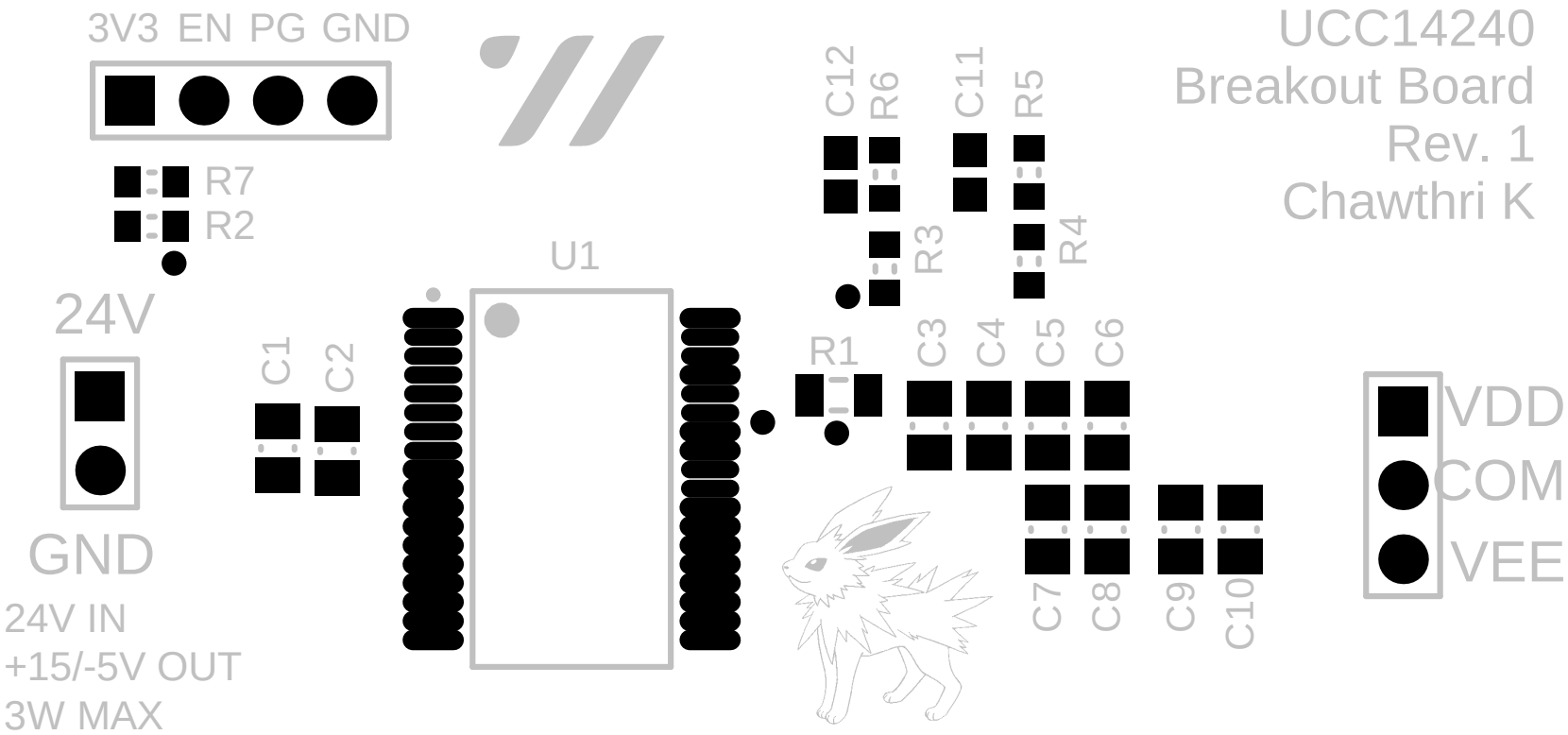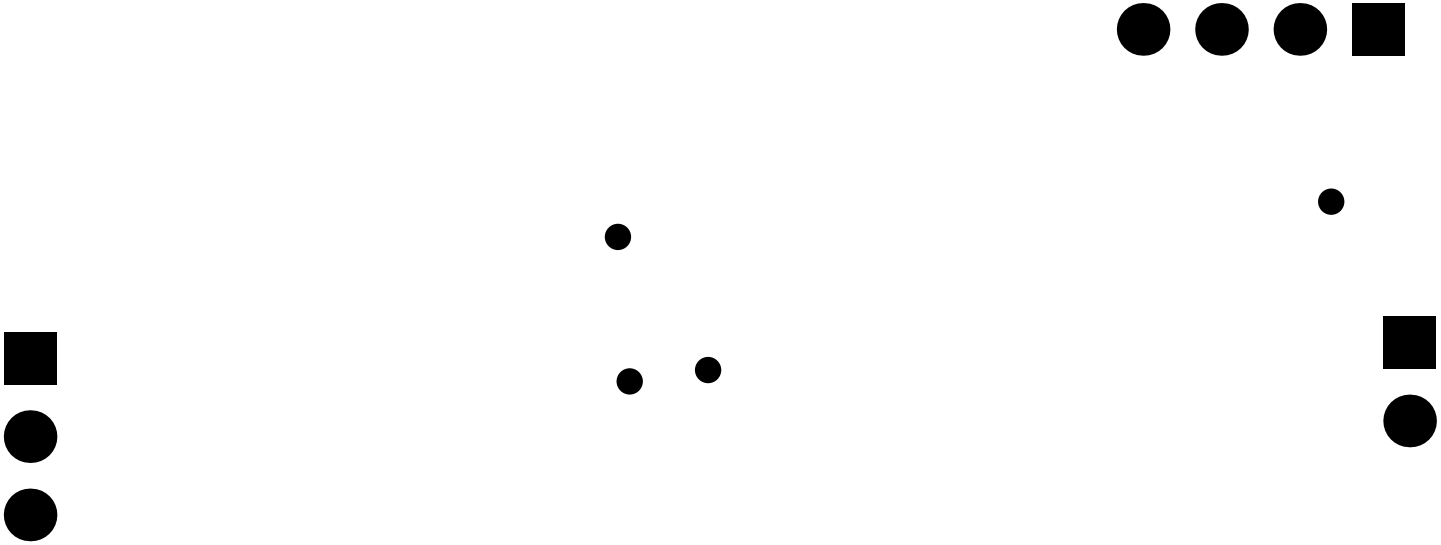
UCC14240
Breakout Board
Rev. 1
Chawthri K
3V3 EN PG GND
R7
R2
24V
GND
24V IN
+15/-5V OUT
3W MAX
C1
C2
U1
C12
R6
C11
R5
R3
R4
R1
C3
C4
C5
C6
C7
C8
C9
C10
VDD
COM
VEE