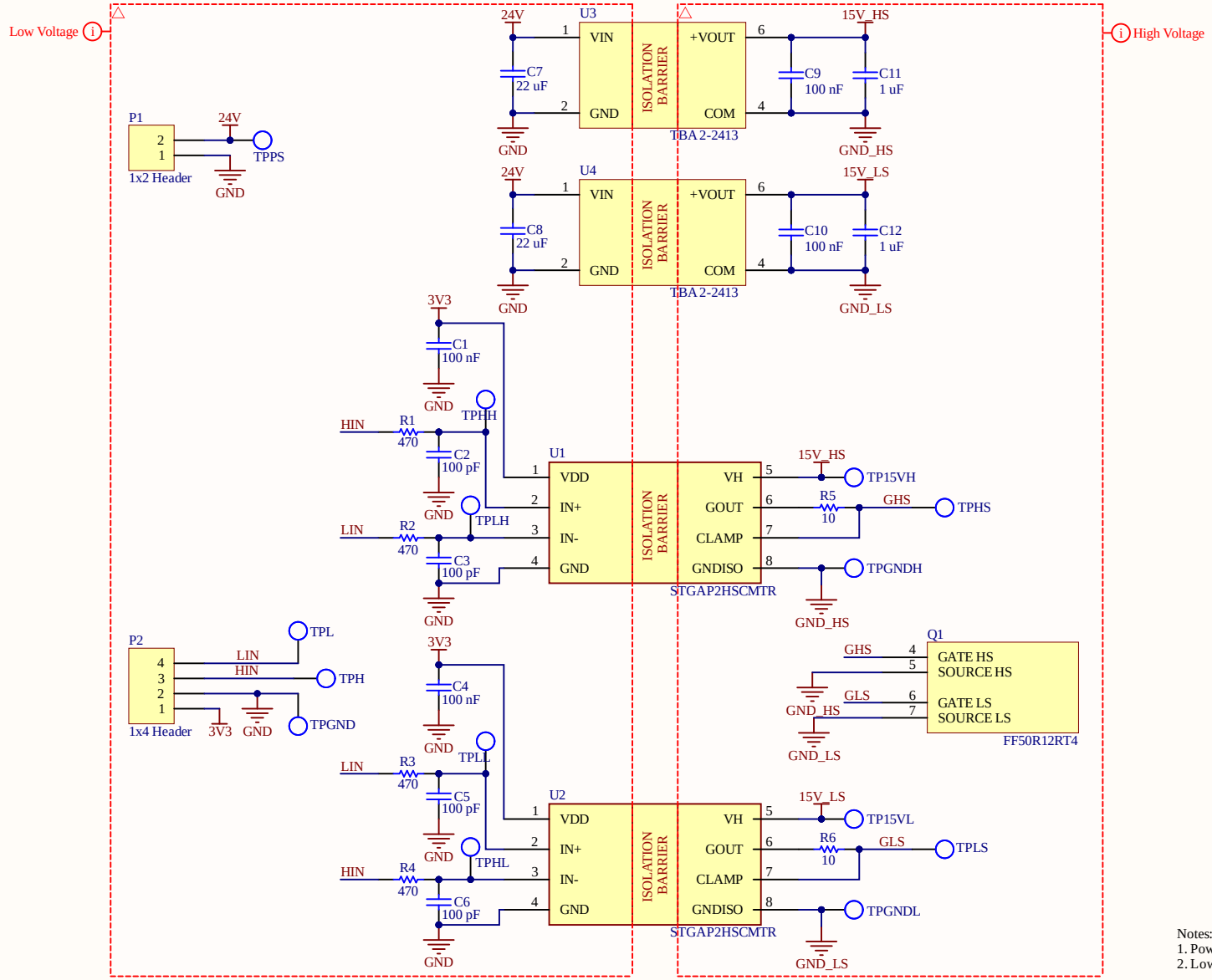

Notes:
1. Power Supply - Input: 24V Output: 15V
2. Low Pass Filter - Cut-off Frequency: 3.39 MHz

Title: *Isolated Gate Driver Test Board*			**Waterloop** 200 University Ave W Engineering 5, 1104 Waterloo, ON N2L 3G1
Size: A4	Author: Benjamin L		
Date: 12/8/2021	Revision: 2	Sheet 1 of 1	
File: Single Channel Isolated Gate Driver Test Board.SchDot			

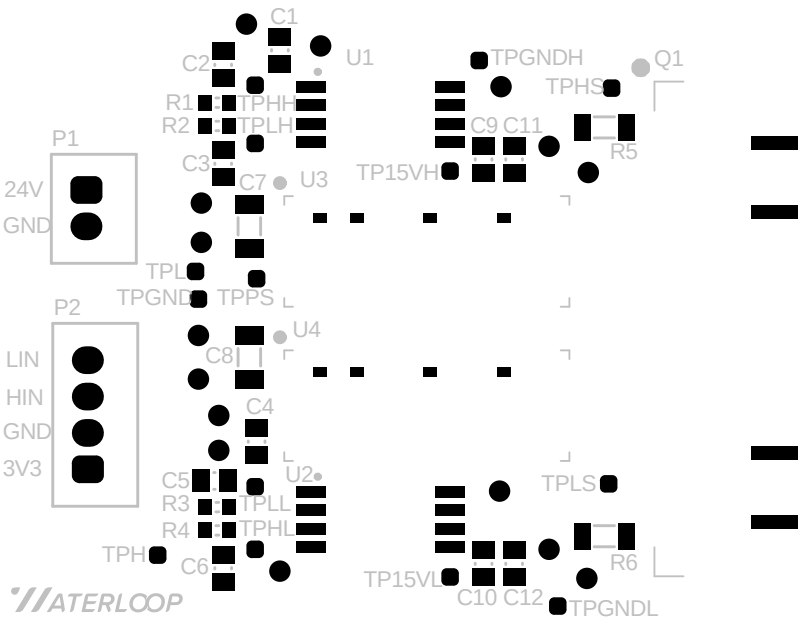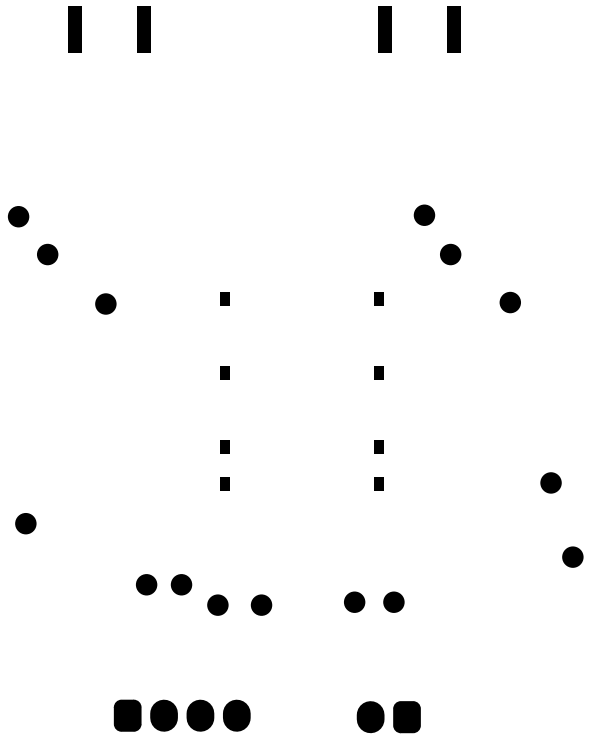
C1
C2
U1
TPGNDH
Q1
TPHS
R1
TPHH
R2
TPLH
C9
C11
R5
P1
C3
TP15VH
24V
C7
U3
GND
TPL
TPGND
TPPS
P2
U4
LIN
C8
HIN
C4
GND
3V3
C5
U2
TPLS
R3
TPLL
R4
TPHL
TPH
C6
R6
TP15VL
C10
C12
TPGNDL
WATERLOOP
Single Channel Isolated Gate Driver Test Board Rev 2