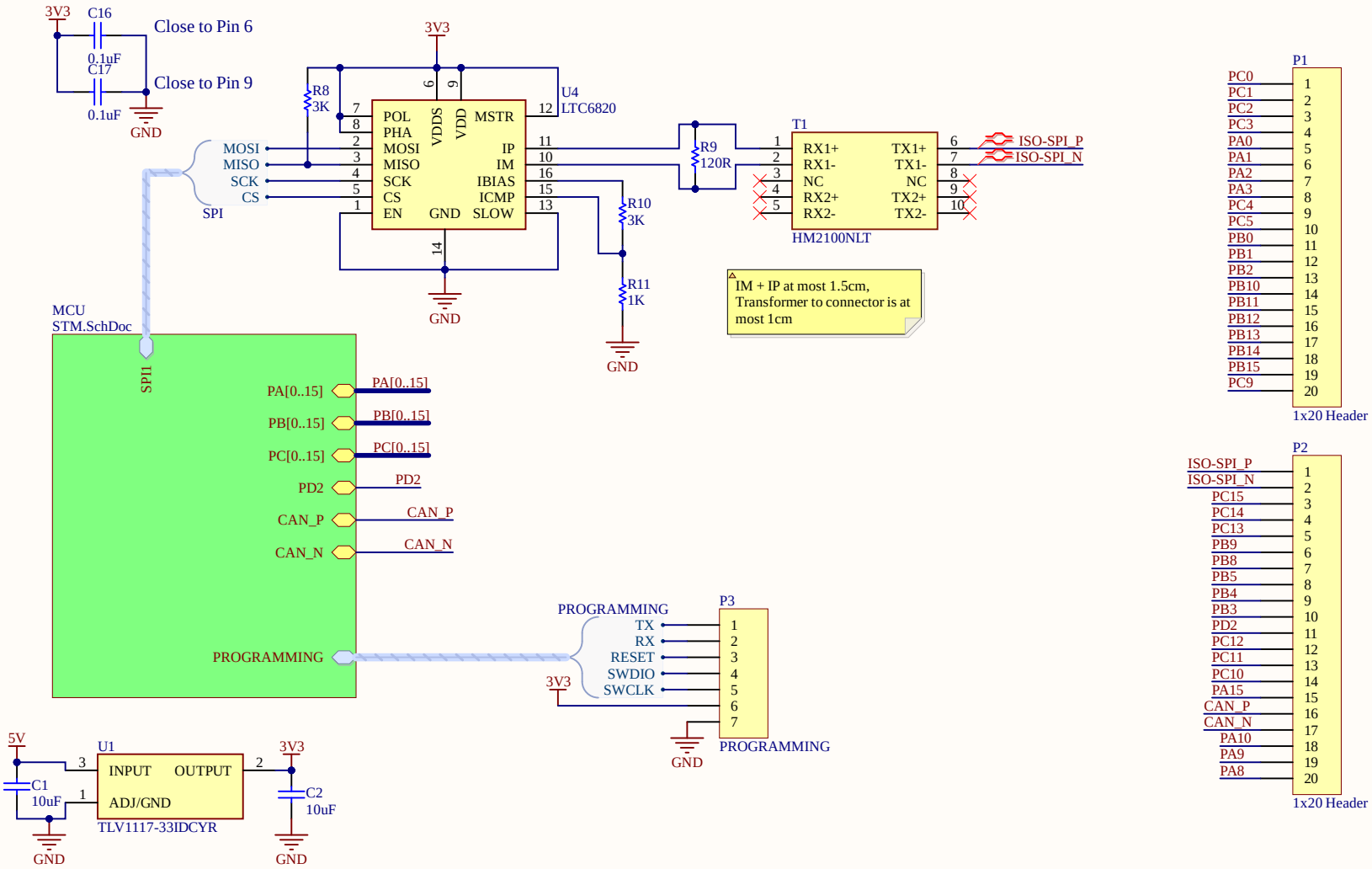

Title: *F405 Dev Board*			**Waterloop** 200 University Ave W Engineering 5, 1104 Waterloo, ON N2L 3G1
Size: A4	Author: Alfonso Faria Espinoza		
Date: 3/16/2021	Revision: 1.0	Sheet 1 of 2	
File: Master.SchDoc			

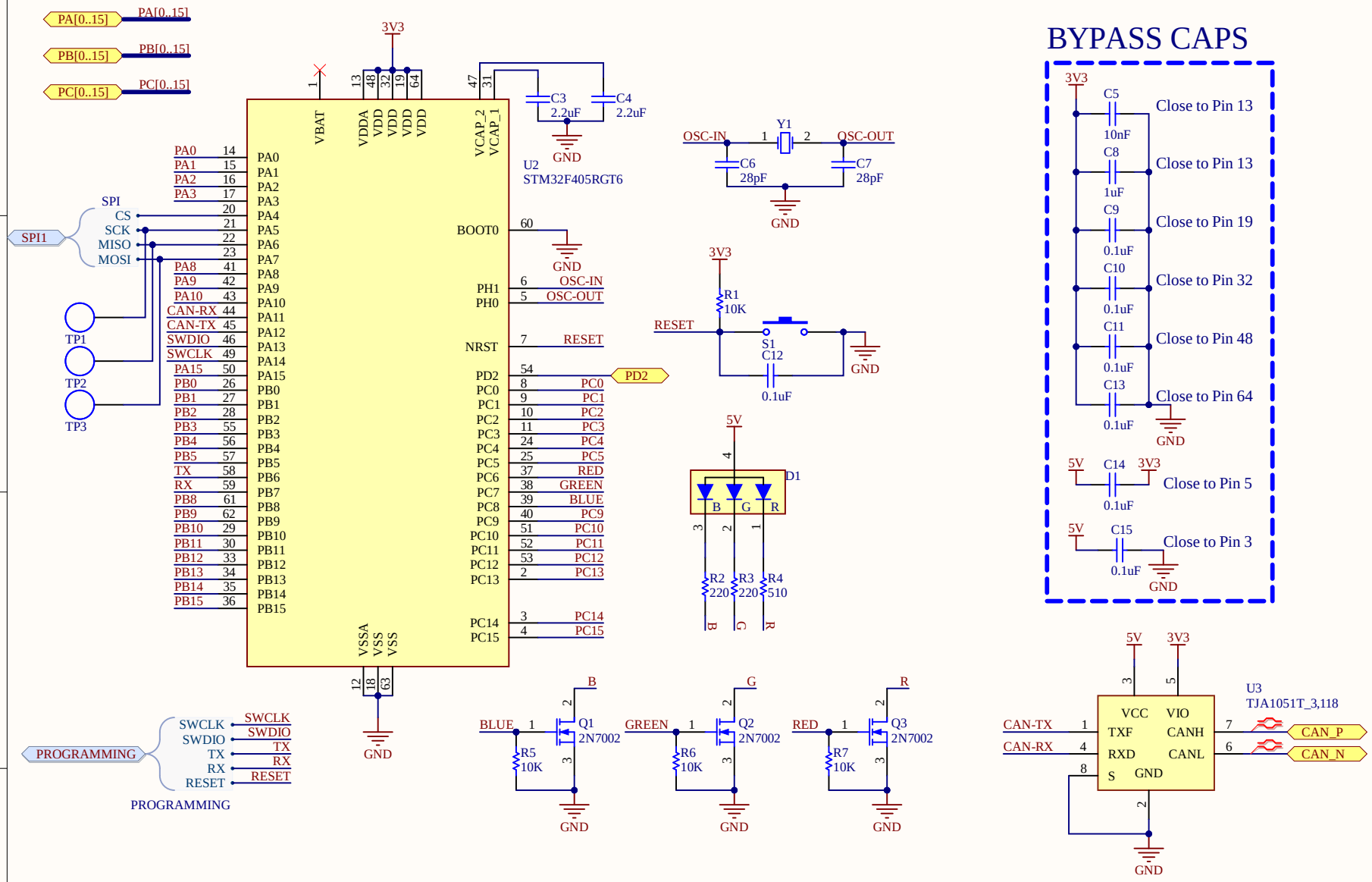

Title: *MCU*			**Waterloop** 200 University Ave W Engineering 5, 1104 Waterloo, ON N2L 3G1
Size: A4	Author: Alfonso Faria Espinoza		
Date: 3/16/2021	Revision: 1.0	Sheet 2 of 2	
File: STM.SchDoc			