hitecture442System Architecturefigure.caption.10

WATERMELON RIPENESS DETECTION AND CLASSIFICATION USING ACOUSTIC SIGNAL PROCESSING AND MACHINE LEARNING

An Undergraduate Thesis

Presented to the
Faculty of Bachelor of Science in Computer Engineering
University of Science and Technology of Southern Philippines
Cagayan de Oro City

In Partial Fulfillment
of the Requirements for the Degree of
Bachelor of Science in Computer Engineering

Christian Phillip T. Bagotsay
Edward Angelo B. Banguis
Giselle V. De la Peña
Marby E. Egnalig
Paul S. Oga
March 2026

APPROVAL SHEET

This Thesis entitled: "WATERMELON RIPENESS DETECTION AND CLASSIFICATION USING ACOUSTIC SIGNAL PROCESSING AND MACHINE LEARNING", prepared and submitted by CHRISTIAN PHILLIP T. BAGOTSAY
EDWARD ANGELO B. BANGUIS
GISELLE V. DE LA PEÑA
MARBY E. EGNALIG
PAUL S. OGA in partial fulfillment of the requirements for the degree of **BACHELOR OF SCIENCE IN COMPUTER ENGINEERING** has been examined and approved.

Engr. Darwin Jone H. Jupiter
Adviser

PANEL OF EXAMINERS

Approved by the committee on Oral Examination with a grade of **PASSED**.

Engr. Sprintszie Maye T. Garrucha
Chair

Engr. Dennis Ivan Chavez
Member

Ms. Marcela Aggarao
Member

Approved and accepted in partial fulfillment of the requirements for the degree **BACHELOR OF SCIENCE IN COMPUTER ENGINEERING**.

Approved:

Dr. Rojien V. Morcilla
Dean, College of Engineering and Architecture

ABSTRACT

Abstract Here

Keywords: *neuromorphic computing, artificial intelligence*

This piece of work is wholeheartedly dedicated

to my parents

Hatdog

and

Lizard

ACKNOWLEDGMENT

Acknowledgments here

The Authors

TABLE OF CONTENTS

Page No.

TITLE PAGE ii

APPROVAL SHEET iii

ABSTRACT iv

DEDICATION v

ACKNOWLEDGMENT vi

TABLE OF CONTENTS vii

LIST OF TABLES x

LIST OF EQUATIONS xi

LIST OF FIGURES xii

LIST OF EQUATIONS xiv

Chapter 1. INTRODUCTION 1

1.1 Background of the Study 1

1.2 Statement of the Problem 3

1.3 Objectives of the Study 5

1.4 Significance of the Study 5

1.5 Scope and Limitations 6

1.6 Definition of Terms 7

Chapter 2. REVIEW OF RELATED LITERATURE 9

2.1 Theoretical Framework 9

2.1.1 Digital Signal Processing 11

2.1.2 Machine Learning 12

2.1.3 Computer Vision 13

2.2 Conceptual Framework 15

2.3 Literature Review 16

2.3.1 Digital Signal Processing 16

2.3.1.1 Watermelon Sorting Process by Frequency Identification and Artificial Neural Network 16

2.3.1.2 Evaluation Of Watermelon Ripeness Using Self Developed Ripening Detector . . 18
2.3.1.3 Non-Destructive Acoustic Screening of Pineapple Ripeness by Unsupervised Machine Learning and Wavelet Kernel Methods 19
2.3.2 Machine Learning 22
2.3.2.1 Watermelon Ripeness Detector Using Near Infrared Spectroscopy 22
2.3.2.2 Supervised Binary Classification Methods for Strawberry Ripeness Discrimination from Bioimpedance Data 23
2.3.2.3 Automatic Classification of the Ripeness Stage of Mango Fruit Using a Machine Learning Approach 25
2.3.3 Computer Vision 25
2.3.3.1 Application of Hyperspectral Imaging for Watermelon Seed Classification Using Deep Learning and Scoring Mechanism . 25
2.3.3.2 An Automated Pipeline for Supervised Classification of Petal Color from Citizen Science Photographs 27
2.4 Synthesis 29
Chapter 3. METHODOLOGY 32
3.1 Research Design & Procedure 32
3.2 Data Gathering 34
3.3 Requirements Analysis 35
3.3.1 Hardware Requirements 35
3.3.2 Software Requirements 39
3.4 System Design 41
3.4.1 Hardware Development 41
3.4.1.1 System Architecture 42
3.4.1.2 Circuit Diagram 42
3.4.1.3 Hardware Design 42
3.4.2 Software Development 48
3.4.2.1 Software Architecture 48

3.5 Another Section 48
3.6 Tables 48
3.7 Images 51
Chapter 4. RESULTS AND DISCUSSION 52
Chapter 5. CONCLUSIONS AND RECOMMENDATIONS 53
5.1 Summary of Findings 53
5.2 Conclusion 54
5.3 Recommendations 55
APPENDICES 56
REFERENCES 57
CURRICULUM VITAE 57
CERTIFICATE OF AUTHENTIC AUTHORSHIP 58

LIST OF TABLES

No.	Table	Page No.
1	A sample long table.	48
2	Sample Data Table	50

LIST OF EQUATIONS

Equation No.	Description	Page
1	Variable x	1
2	Variable y	2
3	Variable z	3

LIST OF FIGURES

No.	Figure	Page No.
1	Theoretical Framework	10
2	Conceptual Framework	15
3	The Modified Waterfall Model	34
4	System Architecture	42
5	Circuit Diagram	42
6	3D Model of the proposed watermelon analysis device.	43
7	Top View	44
8	Rear View	45
9	Front View	45
10	Side View	46
11		46
12	Measurements and Dimensions	47
13	Context Level Diagram	48
14		51
15	Cosine Graph	51

List of Equations

No.	Equation	Page No.
0	Some text	48

LIST OF EQUATIONS

No.	Equation	Page No.
1.1	Variable x	1
2.1	Variable y	2
3.1	Variable z	3

CHAPTER 1

INTRODUCTION

Short introduction ...

1.1 Background of the Study

Advanced technologies have become a cornerstone of modern agriculture, streamlining production and quality control through data-driven methods. Recent trends emphasize the integration of machine learning to enhance efficiency through precision farming and improved resource allocation (Botero-Valencia et al., 2025). Research indicates a paradigm shift where machine learning models have been useful in recent systems dominating over food production. These approaches allow for the evaluation of internal fruit characteristics without compromising physical integrity, aligning practices with contemporary food safety and environmental management requirements (Araújo et al., 2023).

The shift toward quantitative analysis is further supported by research into automated grading systems. Studies highlight how machine learning algorithms are transforming traditional agricultural practices by providing high-precision sorting and quality assurance (Botero-Valencia et al., 2025). Furthermore, the integration of computer vision and acoustic analysis has proven effective in handling agricultural

products, as demonstrated utilized specialized algorithms to provide accurate and efficient solutions for produce management (V. et al., 2025). These trends illustrate a growing reliance on feature extraction techniques to interpret complex biological data. In 2023, the Philippines ranked #52 in the global production of watermelon, having produced around 124,737.55 metric tons of watermelon (Trends of Fresh Watermelon Production in Philippines, 2024). Although the Philippines' contribution to the total global production of watermelon is only around 0.12%, it is still a high-value crop in the Philippines.

Despite these global advancements, many local farmers in the Philippines still rely heavily on traditional, manual methods for pre-harvest assessment. Currently, determining the maturity of watermelons in the field depends on the thumping technique—manually tapping the fruit and listening to the resulting sound, in addition to visual inspection and the observation of the wilting of the watermelon's tendrils. This practice is subjective, as the interpretation of acoustic resonance varies significantly among individuals. Recent literature notes that subjective harvest decisions can lead to the collection of underripe produce, which lacks the necessary sugar content and flavor profiles required for market standards (Savaş Koç & Ferit Akbalik, 2025). This reliance on human intuition creates an inconsistency in fruit quality that can affect the overall reliability of the harvest.

To address these challenges, this study proposes a portable system for de-

tecting watermelon ripeness using acoustic signal processing and machine learning. The device will utilize a microphone to capture the acoustic signals produced by tapping the fruit while still on the vine, with a camera for cross-validation.

1.2 Statement of the Problem

This study seeks to investigate the challenges associated with accurate and objective watermelon ripeness assessment. Despite significant advances in agricultural sensing and automation, accurate and objective watermelon ripeness assessment remains a persistent challenge, particularly for smallholder farmers who continue to rely on manual and subjective methods. These experience-based practices lack standardized metrics and fail to reliably predict quality attributes such as soluble solids, sugar, acidity, sweetness, and firmness (Shah et al., 2025).

To overcome these inconsistencies, various nondestructive testing techniques have been explored, including acoustic-based methods such as acoustic/tactile cues (Hamid et al., 2023), FFT-based acoustic tapping (Okafor, 2020), acoustic impulse response (Pamungkas Bintoro, 2021), and frequency-domain analysis combined with machine learning (Li et al., 2025), as well as computer vision-based methods such as color, texture, and shape feature extraction (Jie et al., 2024), YOLO-based deep learning detection (Defang et al., 2024), and UAV-mounted vision systems (Singh et al., 2025).

Among these, acoustic-based methods have gained particular attention due to their low cost, portability, and ease of field implementation, yet their performance remains highly sensitive to environmental noise with wind, machinery, and handling interference significantly degrading signal quality and the reliability of time-domain and frequency-domain features used for ripeness classification (Li et al., 2025). Similarly, computer vision and optical-based methods, while effective at detecting external ripeness indicators such as color, texture, and shape, are fundamentally limited to surface-level assessment and cannot directly measure internal quality attributes such as flesh firmness, sugar content, or internal voids (Jie et al., 2024; Defang et al., 2024; Arboleda et al., 2020). Relying on either approach alone is therefore insufficient for accurate and comprehensive ripeness assessment.

Existing approaches address either acoustic signal processing or computer vision-based analysis in isolation, with no portable, integrated system combining both modalities for real-time field use identified in the literature. Consequently, local farmers continue to face post-harvest losses and inconsistent product quality due to poor handling, lack of technology, and inadequate ripeness assessment tools (Adepoju Ologan, 2020).

This study addresses this gap by developing a portable device that analyzes the acoustic response and tendril visual characteristics of watermelons, enabling objective and real-time ripeness classification directly in the field and providing local

farmers with a practical and reliable alternative to subjective manual assessment.

1.3 Objectives of the Study

In view of the above stated problem, we have the following objectives:

1. To design a system using an acoustic sensing module utilizing digital signal processing to capture vibration signals and isolate resonant frequencies and a camera to capture tendril images;

2. To develop a portable, field-deployable unit that will analyze acoustic and visual inputs for immediate on-site classification;

3. To evaluate the system's classification accuracy and reliability by comparing its output against traditional manual methods and destructive quality validation.

1.4 Significance of the Study

The development of a portable, non-destructive ripeness assessment system provides critical advancements in agricultural technology and quality control. The findings and output of this research will be significantly beneficial to the following:

Local Farmers and Agricultural Producers. This study provides a low-cost, objective tool that replaces subjective "thumping" methods. By providing accurate harvest timing, farmers in regions such as Northern Mindanao can minimize

post-harvest losses, ensure consistent fruit quality, and command better market prices in urban centers like Cagayan de Oro City.

Consumers and Retailers. The system ensures that only watermelons at peak maturity reach the market. This increases consumer confidence and satisfaction by guaranteeing internal quality attributes—such as sweetness and firmness—reducing the financial risk of purchasing over-ripe or hollow-heart produce.

Future Researchers. The data and methodologies established in this study can serve as a baseline for further research into other fruit varieties or the integration of more complex artificial intelligence models for real-time agricultural diagnostics in uncontrolled environments.

1.5 Scope and Limitations

The study will be conducted in a specific watermelon farm in Northern Mindanao as the site for data collection and system testing. The proposed system will be designed to function as a portable, handheld tool capable of evaluating watermelon ripeness prior to harvest. It relies on a combination of acoustic signal processing and image-based analysis, allowing it to evaluate both external and internal indicators of maturity. All data used for system development and testing will be gathered under natural field conditions to ensure that the device reflects how it would function in actual farm uses.

While the system is designed to provide reliable ripeness assessment, its performance can still be influenced by environmental factors such as wind, machinery, or human activity, which may affect acoustic readings. In addition, the device evaluates only one melon at a time, limiting its use for simultaneous or large-scale assessments. Its focus is exclusively on pre-harvest ripeness, leaving post-harvest quality, storage behavior, and shelf life beyond its scope. Moreover, performance is shaped by the specific farm conditions and the watermelon variety used during development, meaning that results may differ when applied to other environments or cultivars.

1.6 Definition of Terms

Acoustic Signal Processing. A technique used to capture and analyze the sound waves generated from a watermelon ”thump” to identify frequency patterns associated with maturity.

Machine Learning. A category of computational algorithms used to classify watermelon ripeness by identifying patterns within the extracted features.

Pre-harvest Assessment. The process of evaluating the maturity of watermelons while they are still attached to the vine to determine the optimal timing for harvest.

Non-Destructive Testing. A method of quality evaluation that allows for the in-

spection of the internal state of a fruit without causing physical damage.

Thumping Technique. The manual act of striking a watermelon with the hand to produce the resonant sound required for microphone input and digital analysis.

CHAPTER 2

REVIEW OF RELATED LITERATURE

This chapter reviews existing literature and studies on classifying watermelon ripeness using acoustic sounds and visual characteristics using machine learning.

2.1 Theoretical Framework

This study is grounded in Statistical Learning Theory (SLT), which provides a framework for understanding how a system can learn from data and make predictions on new, unseen samples. SLT explains the principles behind learning patterns from representative data, helping guide the design of models that can classify watermelon ripeness reliably (Du et al., 2025). SLT is particularly relevant in this context because it provides a theoretical basis for using measurable features extracted from sensory data, specifically the acoustic signals produced by standardized mechanical knocks and the images of the watermelon's ground spot. These features are processed using Digital Signal Processing (DSP) and Computer Vision (CV) methods, respectively, transforming raw data into quantifiable inputs suitable for classification. Following the SLT framework, the system extracts features from acoustic signals and color-based features from images. These features feed into a classification model designed to assess ripeness accurately and consistently. By

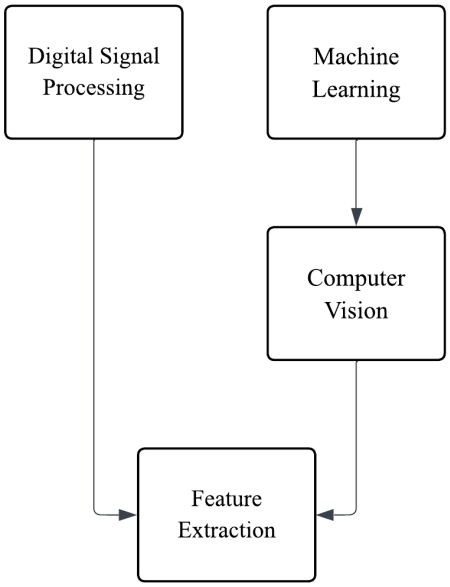

Figure 1: Theoretical Framework

integrating these methods, the proposed device offers a portable, non-destructive, and theoretically sound approach to determining watermelon ripeness, providing farmers with an objective alternative to traditional, experience-based methods.

Digital signal processing, machine learning, and computer vision work together to extract features from watermelon tapping sounds and the appearance of watermelon tendrils.

2.1.1 Digital Signal Processing

Manual determination of fruit and vegetable ripeness often involves simple acoustic or tactile cues — for example, farmers tapping a watermelon and listening for differences in sound or feeling firmness changes. Such practices implicitly rely on the idea that internal physical differences manifest as audible or vibrational signal changes (Hamid, N. A., et al., 2023). Digital Signal Processing formalizes this intuition by capturing acoustic signals (e.g., recorded tapping sounds) and transforming them using techniques such as the Fast Fourier Transform (FFT) to extract features like dominant frequency and spectral amplitude, which correlate with internal structural properties. In Okafor's (2020) study, a prototype watermelon ripeness tester used a microphone to record thumping sounds and then converted them into FFT waveforms using MATLAB, showing that frequency magnitude patterns could distinguish ripe from unripe watermelons. Further supporting this, recent research in watermelon maturity classification demonstrates that frequency-domain analysis of acoustic signals collected from different parts of the watermelon significantly enhances ripeness discrimination when combined with machine learning models such as SVM and logistic regression, improving classification reliability for future mobile-based ripeness detection systems (Li, Y., Bu, Y., Guo, W., 2025). DSP is also central to other non-destructive quality detection technologies, where preprocessing, filtering, and feature extraction improve the signal-to-noise ratio and enable robust

characterization of physical fruit properties (Liu et al., 2025). These theoretical and empirical foundations illustrate that DSP is a key enabler for transforming raw sensor data into discriminative, actionable features for automated ripeness analysis.

2.1.2 Machine Learning

Machine learning is crucial in predicting fruit ripeness due to its ability to learn complex patterns from high-dimensional data and to generalize across variations in environment, sensor conditions, and biological variability. Reviews of AI-driven fruit maturity and quality detection confirm that ML models — including deep learning and traditional classifiers — significantly outperform manual and heuristic approaches by extracting meaningful relationships between input features and quality labels (Jie, M. et al., 2024; Hamid, N. A., et al., 2025). These models can integrate diverse feature sets derived from acoustic DSP and image analysis to improve prediction accuracy and robustness.

For example, a comparative analysis of machine learning approaches applied to watermelon maturity using acoustic and quality features showed that Support Vector Machine (SVM) and LightGBM models achieved high classification accuracies (exceeding 97%) when using frequency and amplitude acoustic features combined with quality indicators (Parvathy Nayana, N., et. al., 2025). This demonstrates that ML models can effectively interpret complex feature patterns and improve predic-

tive performance in real-world agricultural systems. Additionally, non-destructive classification of fruit sweetness and quality using a fusion of acoustic signals and image processing techniques reached high performance with various ML classifiers, showing that combining modalities can enhance the reliability of ripeness prediction (Chawgien, K., Kiattisin, S., 2021). Beyond classification, ML supports multimodal feature fusion and real-time prediction, making it indispensable for portable detection systems that aggregate heterogeneous input data. Reviewing current technological trends in fruit maturity assessment shows a growing emphasis on ML-powered models that can optimize feature selection, adjust to sensory noise, and deliver scalable performance across diverse crops and environments (Jie, M. et al., 2024).

2.1.3 Computer Vision

Computer vision is widely used in crop monitoring and fruit ripeness evaluation by extracting external visual indicators, such as color gradients, texture changes, shape features, and surface patterns, that correspond with maturity stages. Deep learning–based vision models, particularly convolutional neural networks (CNNs) and YOLO variants, have demonstrated high effectiveness in detecting and classifying fruit at various ripeness levels in both controlled and real field conditions. For example, intelligent detection of muskmelon ripeness in greenhouse environments

using a YOLO-RFEW model achieved strong detection accuracy while remaining lightweight and computationally efficient (Defang, X., et. al., 2024).

State-of-the-art reviews note that computer vision techniques based on digital image processing and machine learning classifiers are widely used to extract color, texture, and shape features during fruit growth stages, enabling automated maturity estimation that circumvents the limitations of manual inspection (Jie, M. et al., 2024). Furthermore, airborne and UAV mounted deep learning vision systems have been applied to strawberry maturity detection with high classification performance, optimizing harvest timing and crop management. (Singh, R., Gadade, A. M., Hussain, I., 2025).

These advances highlight the effectiveness of CV in precision agriculture, where imaging technology combined with AI models can detect subtle variations in external features that indicate different ripeness stages. Integrating CV with DSP-derived internal features and ML classification frameworks creates a holistic, multimodal sensing system for ripeness detection, improving accuracy, reliability, and on-farm applicability for portable tools like your proposed watermelon ripeness detector.

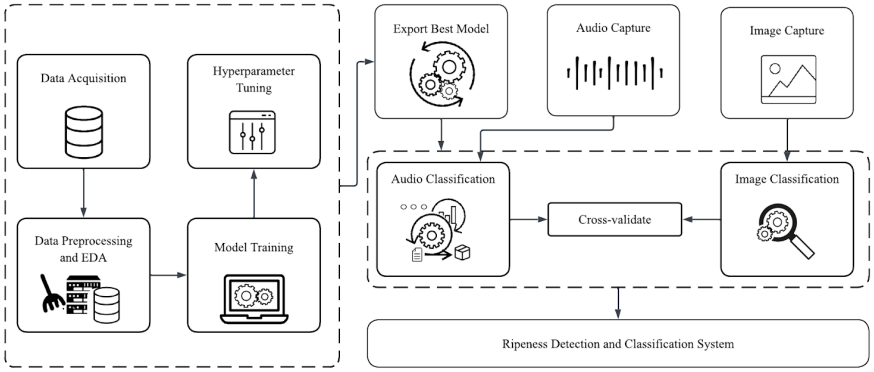

Figure 2: Conceptual Framework

2.2 Conceptual Framework

The conceptual framework of this study will illustrate the process for developing a machine learning–based watermelon ripeness classification system using acoustic and image data. The system will begin with data acquisition, where audio signals and images of watermelons will be collected. These data will undergo preprocessing and exploratory data analysis to ensure quality and suitability for model training.

The processed datasets will be used to train machine learning models, followed by hyperparameter tuning to optimize performance. The best-performing models will then be exported and deployed in the system. During operation, real-time audio and image capturing will be performed and classified separately. The classification results will be cross-validated and integrated to generate a final ripeness output, which will be displayed through an LCD interface.

2.3 Literature Review

The following studies are related to the non-destructive assessment of watermelon ripeness using digital signal processing, machine learning, and computer vision. These works provide relevant methods and findings that support the development of the proposed system.

2.3.1 Digital Signal Processing

2.3.1.1 Watermelon Sorting Process by Frequency Identification and Artificial Neural Network

The study investigates the long-standing challenge of accurately sorting watermelons based on ripeness—a process traditionally performed through manual tapping and subjective auditory judgment (Wongkalasin et al., 2023). The purpose of the research is to develop a more objective, consistent, and modernized method of quality assessment using a frequency-based approach combined with artificial neural networks. To achieve this, the researchers generated controlled sound signals that were transmitted through watermelon samples, collected the resulting vibration responses, and analyzed the signal frequency and amplitude using Fast Fourier Transform (FFT). These processed acoustic features were then used as inputs to a feed-forward neural network trained to differentiate between various ripeness levels. A total of 30 watermelons were tested, each cut open afterward for ground-truth

validation of their actual internal quality.

The findings showed that 129 Hz and 172 Hz produced the most distinct amplitude patterns for differentiating unripe, ripe, and near-rotten fruits, allowing the neural network to classify watermelons with reasonable accuracy. The study concluded that frequency-based analysis integrated with neural network processing provides a modern, non-destructive approach to automated sorting. However, the researchers acknowledged that the system's reliability is limited by the small sample size and the use of only one watermelon variety, meaning broader testing is required to fully validate accuracy and optimize performance across different cultivars.

This study provides a key technical precedent for the proposed acoustic analysis. It validates that processed sound signals (using FFT) can classify ripeness via a neural network, which supports the methodological foundation. The identified resonant frequencies (129 Hz, 172 Hz) serve as a benchmark to evaluate the proposed MFCC-based feature extraction. Critically, the study's limitations—small sample size, single variety, and controlled lab conditions—directly outline the gaps the present research addresses. This research aims to advance the approach by employing MFCCs for better noise resilience, using a larger local dataset, and testing in real field conditions to create a practical farm-level tool.

2.3.1.2 Evaluation Of Watermelon Ripeness Using Self Developed Ripening Detector

The study investigates the use of a self-developed acoustic ripeness detector as an objective method for evaluating watermelon ripeness, offering an alternative to traditional subjective techniques such as manual tapping and visual inspection (Pamungkas Bintoro, 2021). The primary purpose of the research is to determine whether acoustic impulse responses can reliably indicate ripeness levels. In the methodology, a mechanical tapping device was used to generate consistent impacts on the fruit, while the resulting sound signals were recorded and processed in MATLAB. Key acoustic features, including dominant frequency and magnitude, were extracted and analyzed across watermelons harvested at five different maturity stages.

The findings reveal that as watermelon maturity increased, both dominant frequency and magnitude decreased, showing strong correlation with fruit weight and soluble solids content, which are established indicators of ripeness. These results demonstrate that the detector can reliably differentiate ripeness levels based on acoustic characteristics. However, a notable limitation of the study is that it relies on a controlled experimental setup and requires mechanical tapping, which may limit practicality in large-scale or field applications. Additionally, the approach focuses on a limited set of acoustic features, potentially overlooking other informative signal

characteristics.

This study is significant as it strongly validates the use of acoustic signals for non-destructive ripeness detection, providing a clear physiological basis for the proposed system. The inverse relationship between maturity and frequency/magnitude offers a crucial benchmark for acoustic modeling. The limitation of a controlled setup underscores the need for the present research to develop a portable solution for field use. Furthermore, the study highlights a key gap: its reliance on a narrow set of acoustic features could be complemented by integrating computer vision. By fusing acoustic data with visual analysis of external maturity indicators—such as ground-spot color and rind texture—a hybrid system could significantly improve classification robustness, addressing internal and external ripeness cues that a single-modality acoustic approach may miss.

2.3.1.3 Non-Destructive Acoustic Screening of Pineapple Ripeness by Unsupervised Machine Learning and Wavelet Kernel Methods

The study addresses the practical challenge of consistently screening pineapple ripeness on export production lines, where human workers are prone to fatigue-induced errors and subjective inconsistency after prolonged listening (Chen et al., 022). The purpose of the research is to develop an automated, non-destructive acoustic screening device capable of reliably classifying pineapples as raw or ripe directly

on a conveyor system. The methodology involves injecting controlled excitation sounds into the fruit through a vibrator mediated by a custom acoustic coupler, then recording the penetrated sounds for analysis. A Taguchi experiment design was employed to systematically evaluate five acoustic coupler configurations across material, angle, and contact area parameters, ultimately identifying a screw-locked pinning bean board as the optimal coupler based on signal-to-noise ratio.

The study explicitly demonstrates that conventional Fourier Transform analysis is insufficient for this application: both time-domain waveforms and frequency-domain spectral plots of raw and ripe pineapples appear visually indistinguishable, confirming that standard FFT cannot resolve the subtle acoustic differences caused by internal ripeness changes. To overcome this limitation, the study applies Morlet Wavelet Kernel decomposition, which provides simultaneous time and frequency resolution, offering high time resolution at high frequencies and high frequency resolution at low frequencies, allowing it to reveal structural differences that FFT cannot detect. The wavelet transform of ripe pineapples shows a clear spectral ridge at approximately 300 Hz, which is absent or muted in raw fruit, providing a discriminative feature for classification. These wavelet-derived features are processed through an unsupervised pipeline using cross-wavelet power spectrum coherence as the distance metric, followed by singular value decomposition for principal component extraction, and finally AdaBoost-based classification.

From 124 original recordings totaling 3,475 sound frames after preprocessing, 2,780 unlabeled frames were used for unsupervised clustering and 695 labeled frames were reserved for testing. The system achieved 98.56% classification accuracy with a 0.93 F1-score. A notable limitation is that approximately 70% of initial recordings had to be discarded due to acoustic coupler quality issues, and the entire experiment was conducted under controlled, quiet laboratory conditions using a single pineapple variety, raising questions about robustness in noisy field environments. This study carries direct and substantial relevance to the proposed watermelon ripeness detector. Most critically, it provides empirical evidence that raw FFT fails to capture acoustic differences between ripeness stages in fruit tapping applications, because percussion sounds are non-periodic and transient rather than sinusoidal—a finding with direct implications for acoustic feature selection in any tapping-based ripeness system.

This motivates the use of time-frequency representations such as Mel Frequency Cepstral Coefficients (MFCCs) in the proposed system, which, like wavelet decomposition, simultaneously resolves temporal and spectral characteristics of short-duration signals. Additionally, the Taguchi-based acoustic coupler optimization provides a methodological precedent for the mechanical tapping and microphone placement design in the proposed device, reinforcing the importance of coupler geometry in achieving high signal quality. The study's unsupervised clas-

sification approach is also noteworthy: since ripeness is a continuous and gradually changing state rather than a binary condition, unsupervised or semi-supervised strategies may better reflect the underlying biology—a consideration that could inform future iterations of the proposed system when labeled training data from local watermelon varieties is limited.

2.3.2 Machine Learning

2.3.2.1 Watermelon Ripeness Detector Using Near Infrared Spectroscopy

The study presents the design and implementation of a low-cost, portable watermelon ripeness detection system based on near-infrared spectroscopy (NIRS) and machine learning (Arboleda et al., 2020). Its main purpose is to provide a non-destructive and objective alternative to traditional ripeness assessment methods such as tapping or visual inspection, which are often inaccurate and subjective. The methodology involves collecting reflectance spectral data from the watermelon surface using a compact NIR sensor integrated with a Raspberry Pi Zero W. A total of 200 watermelon samples were analyzed and classified using a Support Vector Machine (SVM) to distinguish between ripe and unripe fruits.

The findings show that the proposed system achieved a classification accuracy of 92.5%, demonstrating that reliable ripeness detection can be achieved even with a limited number of wavelength bands. This highlights the effectiveness

of combining simple NIRS hardware with machine learning in real-world agricultural settings. However, a key limitation of the study is that it performs binary classification only and relies on a small dataset, which may limit generalizability across different watermelon varieties and growing conditions. Additionally, the use of manually selected wavelength bands and a single machine learning model may restrict scalability and robustness.

Despite these limitations, the study is significant for the present research as it provides a validated proof-of-concept for a portable, sensor-based detection system, demonstrating the practical viability of deploying low-cost hardware in the field. The high accuracy achieved with a limited sensor also reinforces the potential for integrating other modalities, such as acoustic analysis, to move beyond binary classification and create a more comprehensive and nuanced ripeness assessment tool suitable for farm-level use.

2.3.2.2 Supervised Binary Classification Methods for Strawberry Ripeness Discrimination from Bioimpedance Data

The use of supervised machine learning for binary ripeness classification of strawberry fruit (Ibba et al., 2021) using sensor-derived features extracted from bioimpedance shows a reproducible ML pipeline, addressing the absence of a standardized methodology for this type of agricultural sensor data.. A total of 923

strawberry fruit were measured and labeled as ripe or unripe based on a CIELab color threshold, yielding 684 training and 239 test samples. The raw sensor data were reduced to 18 features through a two-stage selection process: a manual stage based on correlation analysis between features and ripeness labels, and an automated backward sequential feature selection combined with grid search hyperparameter tuning under ten-fold cross-validation. Six supervised binary classifiers were trained and compared: Logistic Regression, Decision Tree, Naive Bayes Classifier, K-Nearest Neighbors, Support Vector Machine, and Multi-Layer Perceptron. MLP models were optimized separately using a 60:20:20 training, validation, and internal test split to promote generalization, while the remaining five classifiers used 10,000-round bootstrap validation for stability assessment before final evaluation on the held-out test set.

This study is significant for the proposed watermelon ripeness detector as it provides a rigorously validated binary classification pipeline whose task structure, ripe versus unripe, directly mirrors the proposed system's classification objective. The complete pipeline spanning correlation-based manual feature selection, automated backward feature selection, bootstrap validation, and held-out test evaluation offers a methodological framework applicable to the proposed system's classifier development for both acoustic and tendril color features. The finding that MLP generalizes best to unseen data while SVM unexpectedly underperforms due to class

overlap is a directly actionable result, cautioning against assuming SVM superiority in ripeness classification tasks where feature distributions may be non-linearly separable—a realistic concern when classifying tendril color under variable field conditions. Furthermore, the study's explicit design objective of deploying the developed models in a portable on-field device reinforces the feasibility of the proposed system's approach of combining optimized binary ML classification with accessible, field-ready hardware.

2.3.2.3 Automatic Classification of the Ripeness Stage of Mango Fruit Using a Machine Learning Approach

2.3.3 Computer Vision

2.3.3.1 Application of Hyperspectral Imaging for Watermelon Seed Classification Using Deep Learning and Scoring Mechanism

The study investigates the use of near-infrared hyperspectral imaging (NIR-HSI) integrated with deep learning techniques for the fast and non-destructive classification of watermelon seed varieties (Qi et al., 2024). Its primary purpose is to address the challenges of high dimensionality and noise in hyperspectral data while improving classification accuracy. Spectral data from 2,283 seeds across 10 varieties were captured within the 1053–1681 nm wavelength range, followed by region-of-interest extraction and spectral correction to ensure data consistency.

To address data complexity, the methodology integrates spectral preprocessing (Savitzky–Golay smoothing and Standard Normal Variate normalization) and feature selection using the Successive Projections Algorithm (SPA) to reduce redundant wavelength bands. Both traditional machine learning models (SVM, XGBoost) and deep learning models (LeNet, GoogLeNet, and ResNet using 1D CNNs) were evaluated. The key finding of the study is that a weighted ensemble scoring mechanism, which fuses predictions from multiple deep learning models, significantly outperforms individual models, achieving a test accuracy of 87.97%. The authors conclude that combining NIR-HSI, deep learning, and ensemble learning provides a robust and effective approach for accurate seed variety identification. This study demonstrates advanced methodologies for processing high-dimensional agricultural sensor data. Its use of sophisticated preprocessing, feature selection, and ensemble modeling to handle complexity and improve accuracy provides a valuable conceptual framework for developing a classification system.

However, the study's reliance on expensive, stationary hyperspectral imaging equipment presents a significant limitation, directly contrasting with the objective of creating a low-cost, portable field device. This distinction highlights the present research's focus on achieving practical deployability by utilizing accessible hardware and sensor fusion tailored for on-farm use.

2.3.3.2 An Automated Pipeline for Supervised Classification of Petal Color from Citizen Science Photographs

The study presents an automated computer vision pipeline for classifying plant color from field photographs using the hue-saturation-value (HSV) color space and k-means clustering, without the use of deep learning or neural networks (Perez-Udell et al., 2023). Its purpose is to provide a flexible, computationally accessible method for classifying color variation in large photographic datasets, addressing the subjectivity and inconsistency inherent in manual scoring and the limitations of RGB-based analysis under variable lighting.

The methodology consists of four sequential Python scripts: a downloader for image acquisition, a Color Cluster Visualizer that applies k-means clustering on a representative image subset to identify the HSV range of the target feature and determine the optimal number of clusters k, a Data Collector that performs the same clustering across all images and aggregates pixels within the defined HSV range into per-image summary statistics, and a Classifier that bins images into user-defined color categories based on those statistics. The pipeline is demonstrated on two plant species: Geranium maculatum, which displays continuous pink-to-purple petal variation classified into three bins using saturation thresholds, and Linanthus parryae, which displays a discrete binary color morph of white versus blue, classified by counting pixels falling within the blue HSV range against an

empirically determined threshold. The binary classification case for L. parryae was validated by manual examination of a subset of images.

The findings demonstrate that the HSV-based pipeline produces accurate and repeatable color classifications without requiring controlled lighting or standardized camera conditions—a key advantage over RGB-based methods, in which illumination changes cause non-linear shifts in all three color channels simultaneously. For the binary classification of L. parryae, the pipeline achieves a precision of 91.5% in identifying the blue morph, with all unclassified images defaulting correctly to the white morph. For the continuous G. maculatum case, the pipeline agrees with unanimous manual scoring 85.3% of the time, and always agrees with at least one of three independent human scorers for contested images. The authors note that focusing classification solely on the pixel-level color range of the target feature, while intentionally ignoring shape and texture, eliminates angle and distance sensitivity and substantially reduces computational requirements, allowing the entire pipeline to run on consumer-grade hardware.

A key limitation is that the method aggregates all pixels within the target color range regardless of spatial structure, meaning it cannot distinguish between separate co-occurring objects of the same color, and performs best when the target feature contrasts sufficiently with its background. This study is directly relevant to the computer vision component of the proposed watermelon ripeness detector,

which classifies tendril color as either green or brown to indicate ripeness. The binary classification case demonstrated in this study—distinguishing two discrete plant color morphs using HSV thresholding and k-means segmentation—mirrors the proposed system's visual classification task structurally and methodologically.

The finding that the HSV color space produces stable and consistent color classification under variable field lighting conditions, where RGB values would fluctuate non-linearly, directly supports the use of HSV as the color space of choice for tendril color extraction in the proposed system. The pipeline's pixel-counting approach for binary classification—counting pixels within a defined HSV range and applying a threshold—is a technically straightforward and computationally lightweight method well suited for embedded deployment in a portable device.

Furthermore, the study's explicit discussion of the advantages of color-only segmentation over shape-and-texture-dependent methods reinforces the suitability of a color-focused traditional CV approach for the proposed system's tendril classification task, where the diagnostic information is entirely chromatic rather than structural.

2.4 Synthesis

The collective findings from these related studies establish a clear, converging pathway for the proposed research. Research by Wongkalasin et al. (2023) and

Pamungkas / Bintoro (2021) fundamentally validates acoustic analysis as a viable, non-destructive method for ripeness detection, demonstrating strong correlations between specific frequency features and internal fruit quality. However, these acoustic studies are constrained by controlled laboratory conditions, small sample sizes, and the limitation of single-sensor, single-variety testing, highlighting a critical gap for field application. In parallel, the work of Arboleda et al. (2020) provides a crucial proof-of-concept for a low-cost, portable system, but its scope is limited to binary classification. The study by Qi et al. (2024), while using different sensor technology, offers a sophisticated methodological blueprint for handling complex sensor data through advanced preprocessing and model fusion to boost accuracy.

Synthesizing these insights, a significant opportunity is identified: to advance beyond these individual limitations by developing a portable, field-deployable tool. The proposed system directly addresses the identified gaps by integrating the validated principle of acoustic analysis—enhanced with more robust MFCC feature extraction for noise resilience—with computer vision for external assessment. This multi-modal, sensor-fusion approach, trained on a larger, locally-sourced dataset, aims to create a practical and comprehensive classification system that surpasses the scope, generalizability, and real-world applicability of the existing research, delivering a nuanced ripeness assessment tool specifically designed for farm-level use.

float

CHAPTER 3

METHODOLOGY

This chapter describes the methodological framework used in developing the machine learning–based watermelon ripeness detection system. It details the research design adopted in the study, the requirements analysis, and the procedures for data gathering and acquisition. The chapter further explains the image collection process, data preprocessing techniques, model training and validation, and system evaluation methods. These procedures were systematically implemented to ensure accurate ripeness classification, model reliability, and consistency of results under real-world agricultural conditions.

3.1 Research Design & Procedure

The proposed research will utilize the Modified Waterfall Methodology, which has a linear and sequential structure, but with overlapping phases or "feedback loops". This methodology is best for software-hardware systems, which is fit for our proposed study.

The research design chosen for this study was the System Development Life Cycle (SDLC), specifically the modified Waterfall Model in Figure 2. The sequential structure of the Waterfall Model—which consists of requirements gathering,

requirements analysis, system design & development, and testing—aligns with the implementation of object detection and audio classification for pre-harvest watermelons. Additionally, with the modified Waterfall Model, an option to go back to the previous phase is available in the event that errors occur in the current phase.

Because the core requirements of the system such as the established resonant frequency (Wongkalasin et al., 2023) and the efficacy of SVM and ensemble modeling (Arboleda et al., 2020; Qi et al., 2024) are already well defined, a structure and sequential framework provides the necessary discipline for the development. However, the "modified" aspect of this model is critical for addressing the transition from the "controlled lab conditions" to the "real-world field conditions" targeted in our study since we are dealing with pre-harvest watermelons, meaning they are still grown. By incorporating feedback loops between phases, this SDLC allows for essential backtracking, which is particularly vital when integrating acoustic sensors and image analysis, as both may require iterative recalibration during development and integration phase. Furthermore, the model respects the inherent physical dependency of the system itself, where the collection of dataset is logically gated by the successful design and integration of the microphone, camera and microcontroller since we will be needing it to collect audio and image data. This ensures that each stage, from hardware-software to integration phase, undergoes rigorous verification before progressing, mitigating the risk of cascading errors in the final system. By

structuring the development this way, the Waterfall Model directly supports the methodological rigor, flexibility, and practical reliability required to deliver a system capable of addressing the persistent issue of manual pre-harvest watermelon inspection in agricultural farms.

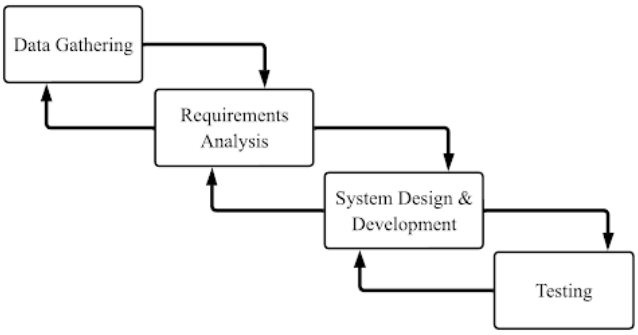

Figure 3: The Modified Waterfall Model

3.2 Data Gathering

The data gathering for this study will be conducted in a selected farm near Cagayan de Oro City. The data to be collected will be through an interview with the farmer, and sound and image samples from the watermelons planted in the farm. The interview will help gather insights on current practices for determining watermelon ripeness, common issues, and accuracy concerns therein. Meanwhile, sound samples will be collected through tapping the watermelons and recording the sound using a prototype of the proposed device. Pictures of the watermelons' tendrils will also be taken.

3.3 Requirements Analysis

Defines the essential hardware and software specifications required to develop the watermelon ripeness detection device. By establishing the system's architecture and functional framework, these requirements provide the technical blueprint necessary to guide the project from conceptual design to successful implementation.

3.3.1 Hardware Requirements

- **Microprocessor.** The ESP32-S3 N16R8 was selected as the primary microcontroller for this system. The ESP32-S3 represents a strategic pivot in Espressif's architecture from connectivity-first to intelligent-compute-first design, built on a dual-core Xtensa LX7 processor running at 240 MHz, delivering more than five times the computational throughput of earlier single-core ESP variants (Yan, 2025). The N16R8 configuration specifically provides 16 MB of external Flash and 8 MB of PSRAM, which directly addresses the memory demands of running concurrent audio buffering, FFT-based signal processing, machine learning inference, and camera frame capture on a single embedded unit.

  A critical hardware advantage of the ESP32-S3 over the standard ESP32-WROOM-32 is its dedicated LCD_CAM peripheral, which operates independently of the I2S audio bus. This architectural separation allows the system

to sample microphone input via I2S and capture camera frames simultaneously on a single board, eliminating the need for a secondary microcontroller solely to handle camera operations. Furthermore, the ESP32-S3 integrates the ESP-DSP vector instruction set and supports the TensorFlow Lite Micro framework, enabling on-device deployment of lightweight classifiers, consistent with the study's approach of exporting trained SVM or decision tree models as compact, hardcoded inference routines deployable without a dedicated GPU or cloud dependency (Yan, 2025). The chip also features native USB Serial/JTAG support, allowing direct firmware flashing and debugging via USB-C throughout development. The chosen board variant is the AI-Thinker ESP32-S3-CAM or Freenove ESP32-S3-WROOM, both of which pre-mount the N16R8 module with an integrated camera connector, minimizing soldering requirement.

- **Pulse Thumper.** The pulse thumper serves as the mechanical actuator responsible for delivering a standardized, repeatable impact to the watermelon surface, replacing the variability inherent in manual hand-tapping. A push-pull solenoid will be used for this purpose, driven by a MOSFET transistor controlled via a GPIO pin on the ESP32-S3. The solenoid operating voltage will be determined during the hardware prototyping phase through empirical testing, as the optimal voltage depends on the trade-off between strike

force sufficient to produce a detectable acoustic response and the risk of surface bruising, a concern directly relevant to the non-destructive nature of the assessment. A 1N4007 flyback diode will be placed across the solenoid terminals to suppress back-EMF and protect the microcontroller from voltage spikes during switching. The striker tip will be fitted with a rubber damping head to replicate the damped impact profile of a human thumb and prevent metallic ringing artifacts from contaminating the recorded acoustic signal. This mechanical standardization is essential for ensuring that the acoustic features extracted across different measurement sessions remain comparable, directly addressing the subjectivity limitation of the traditional thumping technique identified in the problem statement.

- **Microphone.** The INMP441 MEMS digital microphone module was selected for acoustic signal capture. This component communicates over the I2S protocol, which maps directly to the ESP32-S3's I2S peripheral through well-documented Arduino and ESP-IDF libraries, eliminating the analog noise and resolution limitations associated with the ESP32's onboard ADC, a consideration particularly relevant given that the system targets resonant frequency features in the range of approximately 100–300 Hz, where signal fidelity is critical for accurate classification (Li et al., 2025; Pamungkas & Bintoro, 2021). The INMP441 provides an omnidirectional response with a flat fre-

quency range from 60 Hz to 15 kHz, fully encompassing the target acoustic spectrum. The module will be mounted within the enclosure at a distance of approximately 2–5 cm from the watermelon contact surface, oriented perpendicular to the strike point, and housed within a small acoustic chamber integrated into the enclosure design to attenuate ambient noise pickup during field operation.

- **Camera.** A compact camera module will be required to capture an image of the watermelon's ground spot for color-based maturity analysis. The camera will only need to capture a still image with sufficient color accuracy under natural outdoor lighting. It will be mounted on the enclosure facing downward or forward toward the fruit surface, as shown in the 3D model. A camera compatible for the ESP32-S3's camera connections will be chosen, such as the OV2624 with an extended Flexible Flat Cable (FFC).

- **LCD Display.** An LCD display will be used to present the ripeness classification result to the user. Based on the 3D model, a character or small graphical LCD module will be mounted on the back face of the device for easy reading during operation. The display will need to interface with the microprocessor over I2C or SPI and should be readable under outdoor lighting conditions.

- **Battery.** The device will be powered by a rechargeable battery housed within

the enclosure. The voltage of the battery will be determined depending on what voltage the push-pull solenoid is rated, to ensure it will function sufficiently. To power the ESP32-S3, a Buck Converter will be used to step down the battery's voltage to the microcontroller's operating voltage to ensure it won't be damaged. A capacitor will be added to prevent a "brownout" on the microcontroller, where it will not get enough power due to the solenoid hogging the voltage. The battery will need to provide enough capacity for a reasonable field working session without requiring frequent recharging.

- **Enclosure.** Based on the 3D model, the system will be housed in a custom-designed handheld enclosure that integrates all components in a fixed layout—with the pulse thumper at the front, the microphone and camera facing the fruit, the microprocessor mounted internally, and the LCD display and battery at the rear. The enclosure will likely be 3D-printed to match the designed form factor and will need to be sturdy enough for regular outdoor farm use.

3.3.2 Software Requirements

- **Programming Language and IDE.** The firmware and processing logic will be written in C/C++ using the Arduino IDE or PlatformIO, both of which have strong community support for ESP32 and similar boards. MicroPython will be another option that allows Python-style scripting directly on the microcon-

troller, which may simplify the implementation of the signal processing and classification routines. The development team will choose based on familiarity and which option best supports the audio and camera libraries available for the target board.

- **Signal Processing.** The signal processing pipeline will need to extract basic frequency-domain features from the recorded tap sound. This will involve computing a Fast Fourier Transform on the audio sample and identifying dominant frequency components that correlate with ripeness. On a microcontroller, this will be done using lightweight FFT libraries available for Arduino or MicroPython environments. The processing will not need to be complex—a small set of frequency and amplitude features will be sufficient as input to the classifier.

- **Computer Vision.** The image processing component will leverage a lightweight convolutional neural network (CNN) to analyze the tendril region of captured images and assess the wilting state, which correlates with the ripeness stage of the fruit. The method is designed to operate on low-resource hardware, making it feasible for deployment on devices without dedicated GPUs.

- **Machine Learning Classifier.** The classifier that combines acoustic and visual features to determine ripeness will be kept simple. Given the structured,

low-dimensional nature of the feature input, a lightweight classical approach will be well-suited for this task. The model will be trained on a desktop computer then converted into a compact, hardcoded form for deployment on the microcontroller. No deep learning framework or complex model architecture will be required—the feature set will be small enough that a straightforward classifier will be adequate.

- **Version Control.** Git will be used to manage the project's source code and keep track of changes throughout development. A shared repository on a platform such as GitHub will allow the team to collaborate and maintain a history of the project as it evolves.

3.4 System Design

3.4.1 Hardware Development

3.4.1.1 System Architecture

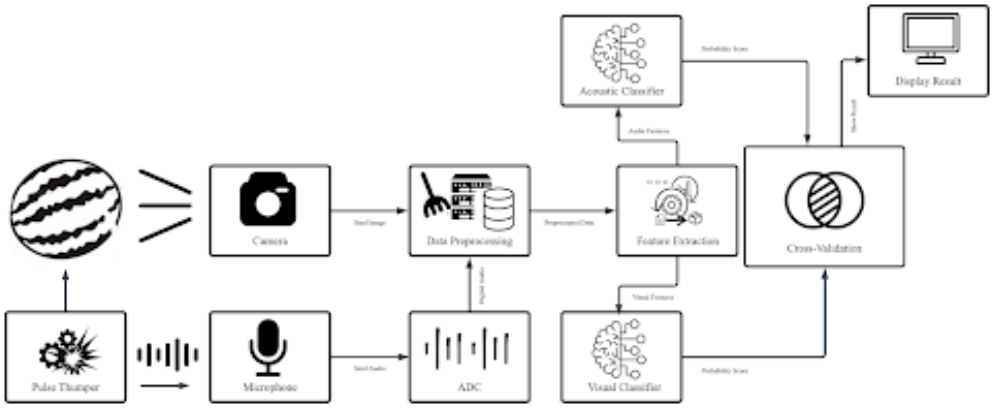

Figure 4: System Architecture

3.4.1.2 Circuit Diagram

Figure 5: Circuit Diagram

3.4.1.3 Hardware Design

This subsection describes the physical structure of the proposed system used for watermelon ripeness analysis. The design includes a three-dimensional (3D) model to visualize the overall structure and a two-dimensional (2D) model that presents the dimensional layout and component placement.

3D Model

This section shows the arrangement of major components such as the camera module, microphone sensor, tapping mechanism, and LCD display. The model provides a clear visualization of how the components are integrated within the enclosure.

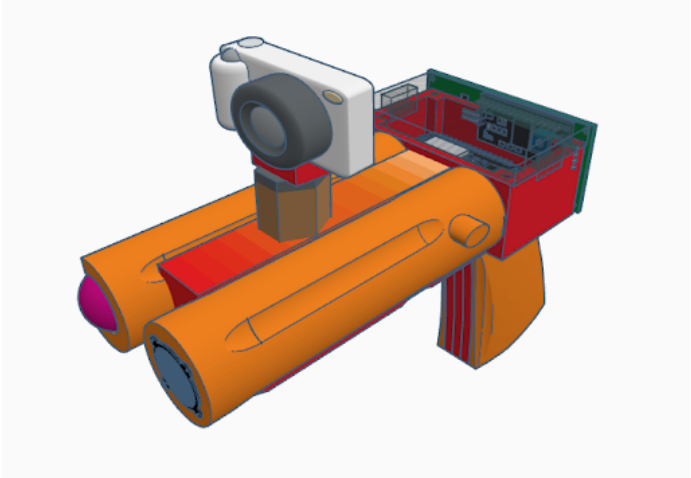

Figure 6: 3D Model of the proposed watermelon analysis device.

The design ensures proper positioning of the imaging and acoustic sensing components to enable consistent data acquisition during the ripeness detection process.

2D Model

The two-dimensional (2D) model of the proposed device. This section includes multiple orthographic views, such as the top, side, front, and back views, to illustrate the structural layout of the hardware system. These views provide a clearer representation of the device's dimensions, component placement, and overall configuration.

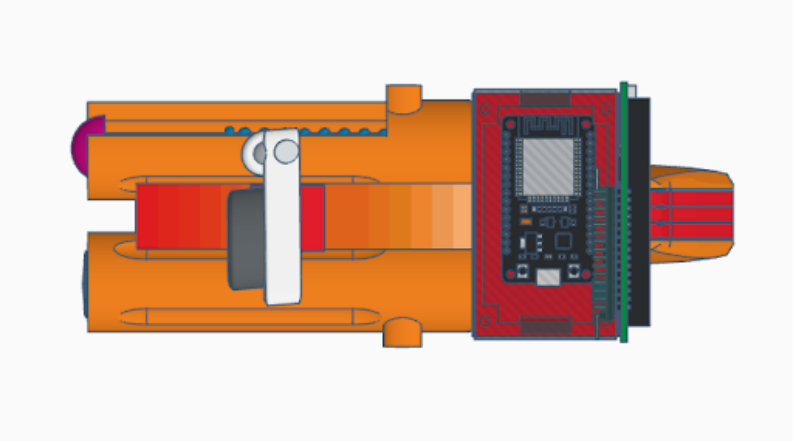

Figure 7: Top View

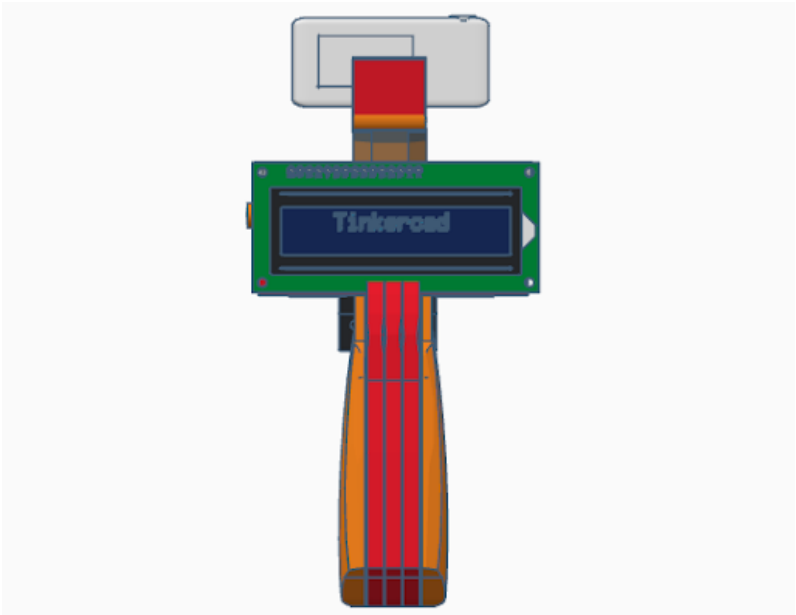

Figure 8: Rear View

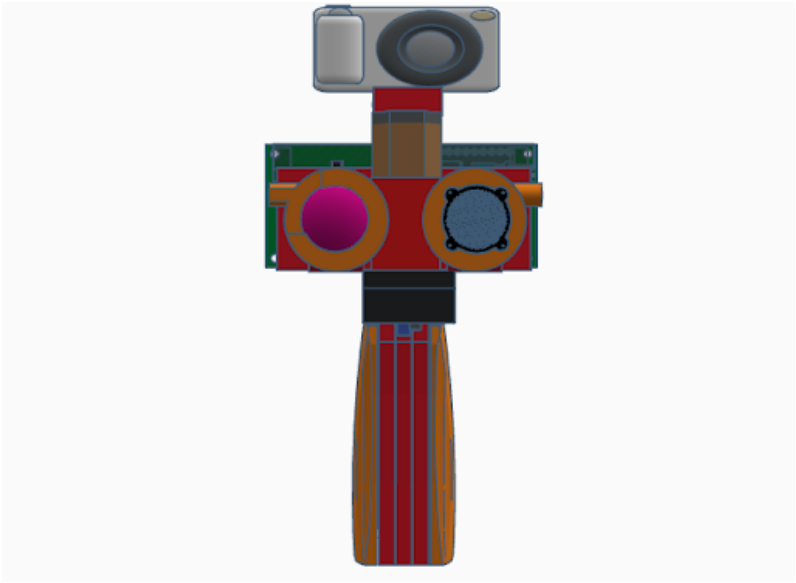

Figure 9: Front View

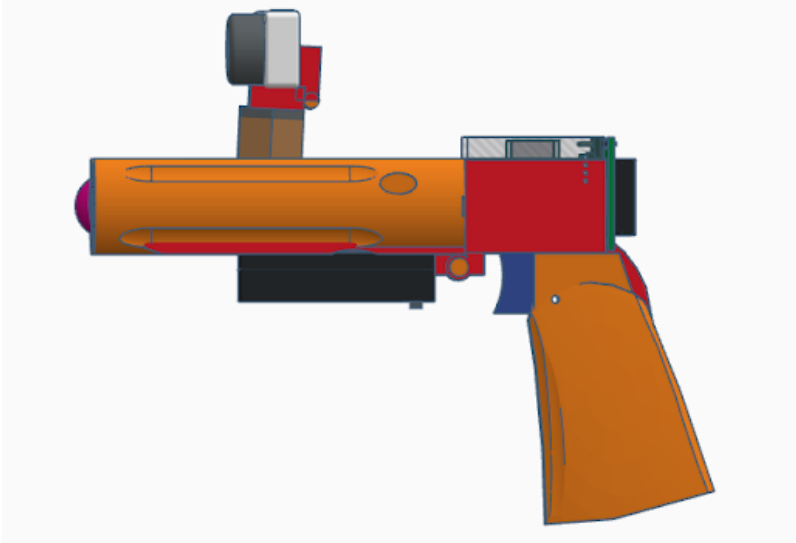

Figure 10: Side View

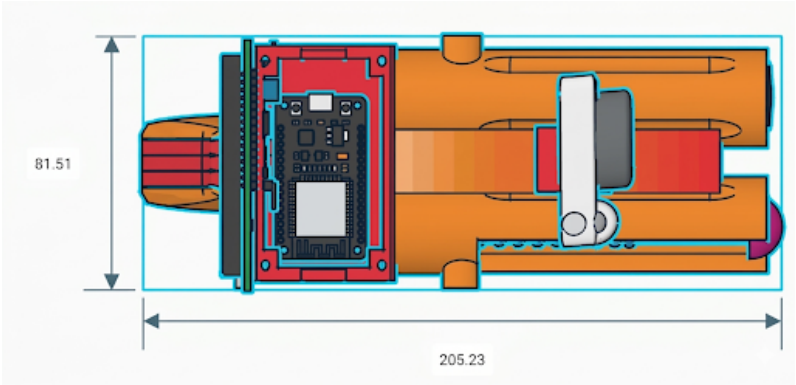

Figure 11

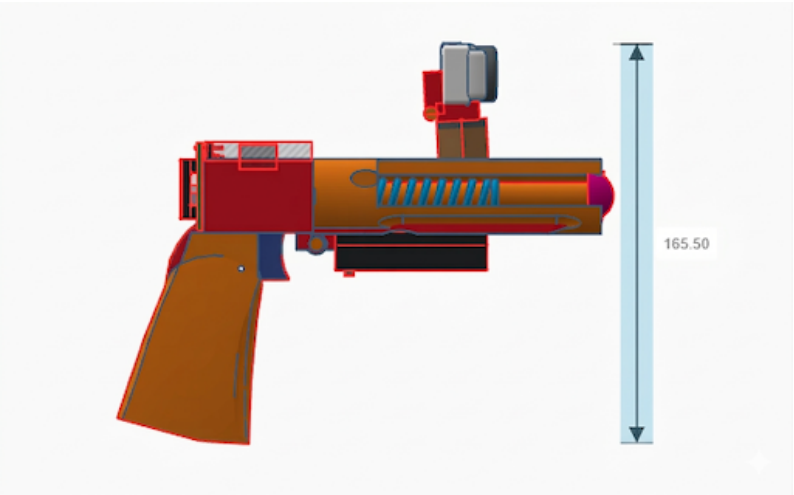

Figure 12: Measurements and Dimensions

3.4.2 Software Development

3.4.2.1 Software Architecture

Figure 13: Context Level Diagram

Context Level Diagram

3.5 Another Section

3.6 Tables

Table 1: A sample long table.

First column	Second column	Third column
One	abcdef ghjijklmn	123.456778
One	abcdef ghjijklmn	123.456778
One	abcdef ghjijklmn	123.456778
One	abcdef ghjijklmn	123.456778
One	abcdef ghjijklmn	123.456778
One	abcdef ghjijklmn	123.456778
One	abcdef ghjijklmn	123.456778
One	abcdef ghjijklmn	123.456778
One	abcdef ghjijklmn	123.456778
One	abcdef ghjijklmn	123.456778
One	abcdef ghjijklmn	123.456778
One	abcdef ghjijklmn	123.456778
One	abcdef ghjijklmn	123.456778
One	abcdef ghjijklmn	123.456778
One	abcdef ghjijklmn	123.456778
One	abcdef ghjijklmn	123.456778
One	abcdef ghjijklmn	123.456778
One	abcdef ghjijklmn	123.456778
One	abcdef ghjijklmn	123.456778
One	abcdef ghjijklmn	123.456778
One	abcdef ghjijklmn	123.456778
One	abcdef ghjijklmn	123.456778
One	abcdef ghjijklmn	123.456778

Continued on next page

Table 1 – continued from previous page

First column	Second column	Third column
One	abcdef ghjijklmn	123.456778
One	abcdef ghjijklmn	123.456778
One	abcdef ghjijklmn	123.456778

Table 1 – continued from previous page

First column	Second column	Third column
One	abcdef ghjijklmn	123.456778
One	abcdef ghjijklmn	123.456778
One	abcdef ghjijklmn	123.456778
One	abcdef ghjijklmn	123.456778
One	abcdef ghjijklmn	123.456778
One	abcdef ghjijklmn	123.456778
One	abcdef ghjijklmn	123.456778
One	abcdef ghjijklmn	123.456778
One	abcdef ghjijklmn	123.456778
One	abcdef ghjijklmn	123.456778
One	abcdef ghjijklmn	123.456778
One	abcdef ghjijklmn	123.456778
One	abcdef ghjijklmn	123.456778
One	abcdef ghjijklmn	123.456778
One	abcdef ghjijklmn	123.456778
One	abcdef ghjijklmn	123.456778
One	abcdef ghjijklmn	123.456778
One	abcdef ghjijklmn	123.456778
One	abcdef ghjijklmn	123.456778
One	abcdef ghjijklmn	123.456778
One	abcdef ghjijklmn	123.456778
One	abcdef ghjijklmn	123.456778
One	abcdef ghjijklmn	123.456778
One	abcdef ghjijklmn	123.456778
One	abcdef ghjijklmn	123.456778

Table 2: Sample Data Table

Item	Quantity	Price ($)
Apples	10	0.50
Bananas	5	0.30
Cherries	20	1.20
Dates	50	2.50

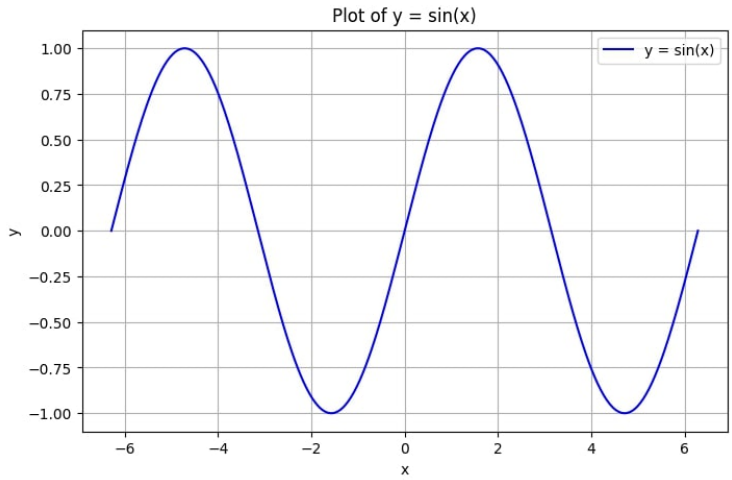

Figure 14

3.7 Images

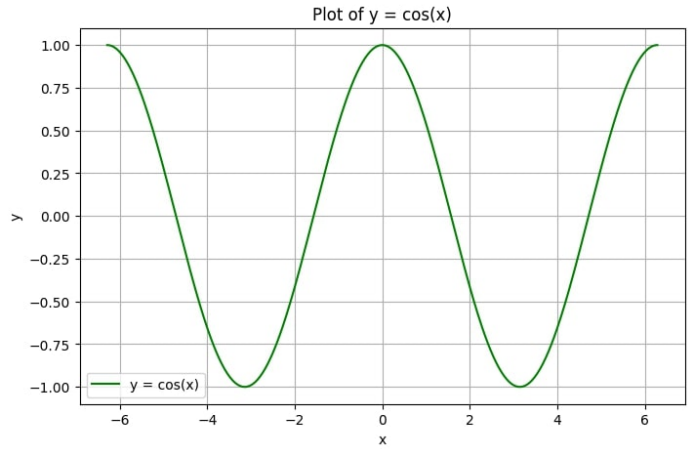

Figure 15: Cosine Graph

CHAPTER 4

RESULTS AND DISCUSSION

This chapter presents the findings from the research conducted and provides a thorough analysis and interpretation of these results.

CHAPTER 5

CONCLUSIONS AND RECOMMENDATIONS

This chapter provides the summary of the results obtained in this study and gives some recommendations for further investigation.

5.1 Summary of Findings

The study's findings address the initial research questions by confirming the effectiveness, reliability, and diverse applications of telemetry systems. The "Summary of Findings" section provides a concise overview of the key results from your research. This section should be factual and focus on presenting the data without interpretation. It should include:

Key Results:

Briefly summarize the most significant findings. Use bullet points or numbered lists for clarity if appropriate. Present the data as it was found, highlighting major patterns, relationships, or trends.

Data Presentation:

Include tables, graphs, or charts that succinctly summarize the data. Make sure each visual aid is clearly labeled and includes a brief description.

Coverage of Research Questions:

Address each of the research questions or hypotheses posed at the beginning of the study. Summarize the results relevant to each question.

5.2 Conclusion

The ”Conclusions” section interprets the findings and discusses their implications. This section should:

Interpret Findings:

Provide an interpretation of the data summarized in the previous section. Discuss what the results mean in the context of the research questions or hypotheses. Implications:

Explain the significance of the findings. Discuss how the results contribute to the field of study or practical applications. Limitations:

Acknowledge any limitations in the study that may affect the results or their interpretation.

5.3 Recommendations

The ”Recommendations” section provides actionable suggestions based on the study’s findings and conclusions. This section should:

Practical Applications:

Offer specific recommendations for practitioners, policymakers, or other stakeholders based on the findings. Future Research:

Suggest areas for further investigation that could address the study’s limitations or build on its findings. Implementation:

Provide guidance on how the recommendations can be implemented effectively.

APPENDICES

Type your appendix here.

CURRICULUM VITAE

Name:	**Darwin Jone H. Jupiter**
Date of Birth:	June 5, 2000
Place of Birth:	San Fernandino, Roseller T. Lim, Zamboanga Sibugay
Home Address:	Katipunan, Roseller T. Lim, Zamboanga Sibugay
E-mail Address:	darwinjone.jupiter@ustp.edu.ph

EDUCATIONAL BACKGROUND:

Master's Degree:	Batangas State Univeristy - The National Engineering University Alangilan, Batangas City Master of Science in Computer Engineering (on-going) —
Undergraduate Degree:	University of Science and Technology of Southern Philippines C. M. Recto Ave., Lapasan, Cagayan de Oro City Bachelor of Science in Computer Engineering Cum Laude, April 2022
Senior High School:	Ateneo de Zamboanga University La Purisima St., Zamboanga City With Honors, March 2018
Junior High School:	San Fernandino National High School San Fernandino, Roseller T. Lim, Zamboanga Sibugay Class Valedictorian, March 2016
Elementary:	Guinabucan Elementary School San Fernandino, Roseller T. Lim, Zamboanga Sibugay Class Valedictorian, March 2012

CERTIFICATE OF AUTHENTIC AUTHORSHIP

I hereby declare that this submission is my own work and, to the best of my knowledge, it contains no materials previously published or written by another person, nor material which, to a substantial extent, has been accepted for the award of any other degree or diploma at USTP or any other educational institution, except where due acknowledgement is made in the manuscript. Any contribution made to the research by others, with whom I have worked at USTP or elsewhere, is explicitly acknowledged in the manuscript.

I also declare that the intellectual content of this manuscript is the product of my own work, except to the extent that assistance from others in the project design and conception or in style, presentation and linguistic expression is acknowledged.

CHRISTIAN PHILLIP T. BAGOTSAY
EDWARD ANGELO B. BANGUIS
GISELLE V. DE LA PEÑA
MARBY E. EGNALIG
PAUL S. OGA

Date: ”insert date signed