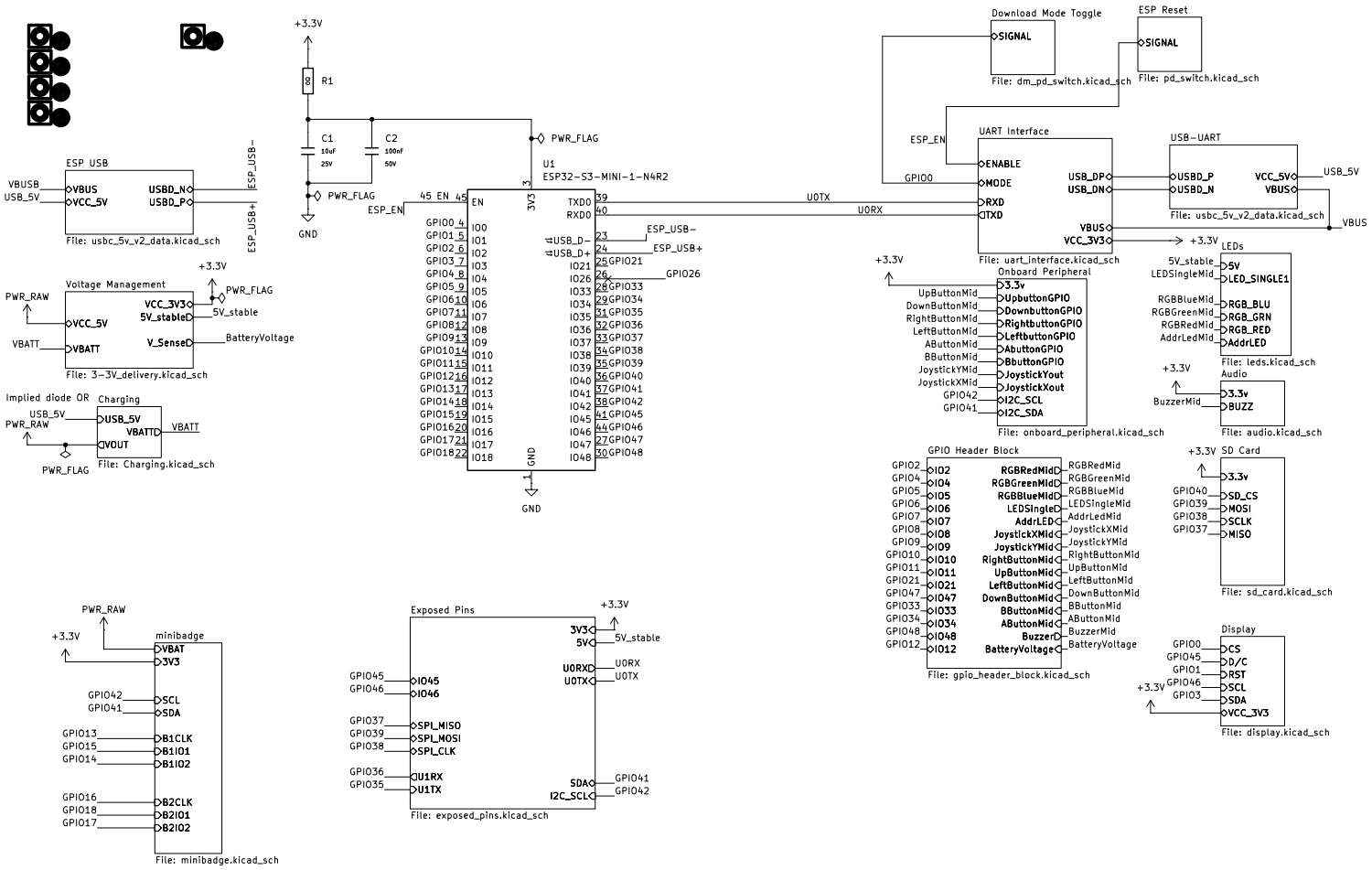
ESP USB
VBUSB
USB_5V
VBUS
VCC_5V
USBD_N
USBD_P
ESP_USB−
ESP_USB+
File: usbc_5v_v2_data.kicad_sch
Voltage Management
PWR_RAW
VCC_5V
VBATT
VCC_3V3
5V_stable
V_Sense
+3.3V
PWR_FLAG
5V_stable
BatteryVoltage
File: 3−3V_delivery.kicad_sch
Implied diode OR
Charging
USB_5V
PWR_RAW
USB_5V
VBATT
VOUT
VBATT
PWR_FLAG
File: Charging.kicad_sch
+3.3V
R1
C1
10uF
25V
C2
100nF
50V
PWR_FLAG
GND
PWR_FLAG
U1
ESP32−S3−MINI−1−N4R2
45 EN 45
ESP_EN
EN
3V3
GPIO0 4
GPIO1 5
GPIO2 6
GPIO3 7
GPIO4 8
GPIO5 9
GPIO6 10
GPIO7 11
GPIO8 12
GPIO9 13
GPIO10 14
GPIO11 15
GPIO12 16
GPIO13 17
GPIO14 18
GPIO15 19
GPIO16 20
GPIO17 21
GPIO18 22
IO0
IO1
IO2
IO3
IO4
IO5
IO6
IO7
IO8
IO9
IO10
IO11
IO12
IO13
IO14
IO15
IO16
IO17
IO18
TXD0 39
RXD0 40
USB_D− 23
USB_D+ 24
ESP_USB−
ESP_USB+
IO21 25 GPIO21
IO26 26 GPIO26
IO33 28 GPIO33
IO34 29 GPIO34
IO35 31 GPIO35
IO36 32 GPIO36
IO37 33 GPIO37
IO38 34 GPIO38
IO39 35 GPIO39
IO40 36 GPIO40
IO41 37 GPIO41
IO42 38 GPIO42
IO45 41 GPIO45
IO46 44 GPIO46
IO47 27 GPIO47
IO48 30 GPIO48
GND
Download Mode Toggle
SIGNAL
File: dm_pd_switch.kicad_sch
ESP Reset
SIGNAL
File: pd_switch.kicad_sch
ESP_EN
UART Interface
ENABLE
GPIO0
MODE
RXD
TXD
USB_DP
USB_DN
VBUS
VCC_3V3
U0TX
U0RX
File: uart_interface.kicad_sch
USB−UART
USBD_P
USBD_N
VCC_5V
VBUS
USB_5V
File: usbc_5v_v2_data.kicad_sch
VBUS
+3.3V
+3.3V
Onboard Peripheral
UpButtonMid
DownButtonMid
RightButtonMid
LeftButtonMid
AButtonMid
BButtonMid
JoystickYMid
JoystickXMid
GPIO42
GPIO41
3.3v
UpbuttonGPIO
DownbuttonGPIO
RightbuttonGPIO
LeftbuttonGPIO
AbuttonGPIO
BbuttonGPIO
JoystickYout
JoystickXout
I2C_SCL
I2C_SDA
File: onboard_peripheral.kicad_sch
LEDs
5V_stable
LEDSingleMid
5V
LED_SINGLE1
RGBBlueMid
RGBGreenMid
RGBRedMid
AddrLedMid
RGB_BLU
RGB_GRN
RGB_RED
AddrLED
File: leds.kicad_sch
+3.3V
Audio
BuzzerMid
3.3v
BUZZ
File: audio.kicad_sch
GPIO Header Block
GPIO2 IO2
GPIO4 IO4
GPIO5 IO5
GPIO6 IO6
GPIO7 IO7
GPIO8 IO8
GPIO9 IO9
GPIO10 IO10
GPIO11 IO11
GPIO21 IO21
GPIO47 IO47
GPIO33 IO33
GPIO34 IO34
GPIO48 IO48
GPIO12 IO12
RGBRedMid
RGBGreenMid
RGBBlueMid
LEDSingleMid
AddrLedMid
JoystickXMid
JoystickYMid
RightButtonMid
UpButtonMid
LeftButtonMid
DownButtonMid
BButtonMid
AButtonMid
BuzzerMid
BatteryVoltage
File: gpio_header_block.kicad_sch
+3.3V
SD Card
3.3v
GPIO40 SD_CS
GPIO39 MOSI
GPIO38 SCLK
GPIO37 MISO
File: sd_card.kicad_sch
Display
GPIO0 CS
GPIO45 D/C
GPIO1 RST
GPIO46 SCL
GPIO3 SDA
VCC_3V3
+3.3V
File: display.kicad_sch
PWR_RAW
+3.3V
minibadge
VBAT
3V3
GPIO42 SCL
GPIO41 SDA
GPIO13 B1CLK
GPIO15 B1IO1
GPIO14 B1IO2
GPIO16 B2CLK
GPIO18 B2IO1
GPIO17 B2IO2
File: minibadge.kicad_sch
Exposed Pins
+3.3V
3V3
5V
5V_stable
U0RX
U0TX
GPIO45 IO45
GPIO46 IO46
GPIO37 SPI_MISO
GPIO39 SPI_MOSI
GPIO38 SPI_CLK
GPIO36 U1RX
GPIO35 U1TX
SDA
I2C_SCL
GPIO41
GPIO42
File: exposed_pins.kicad_sch

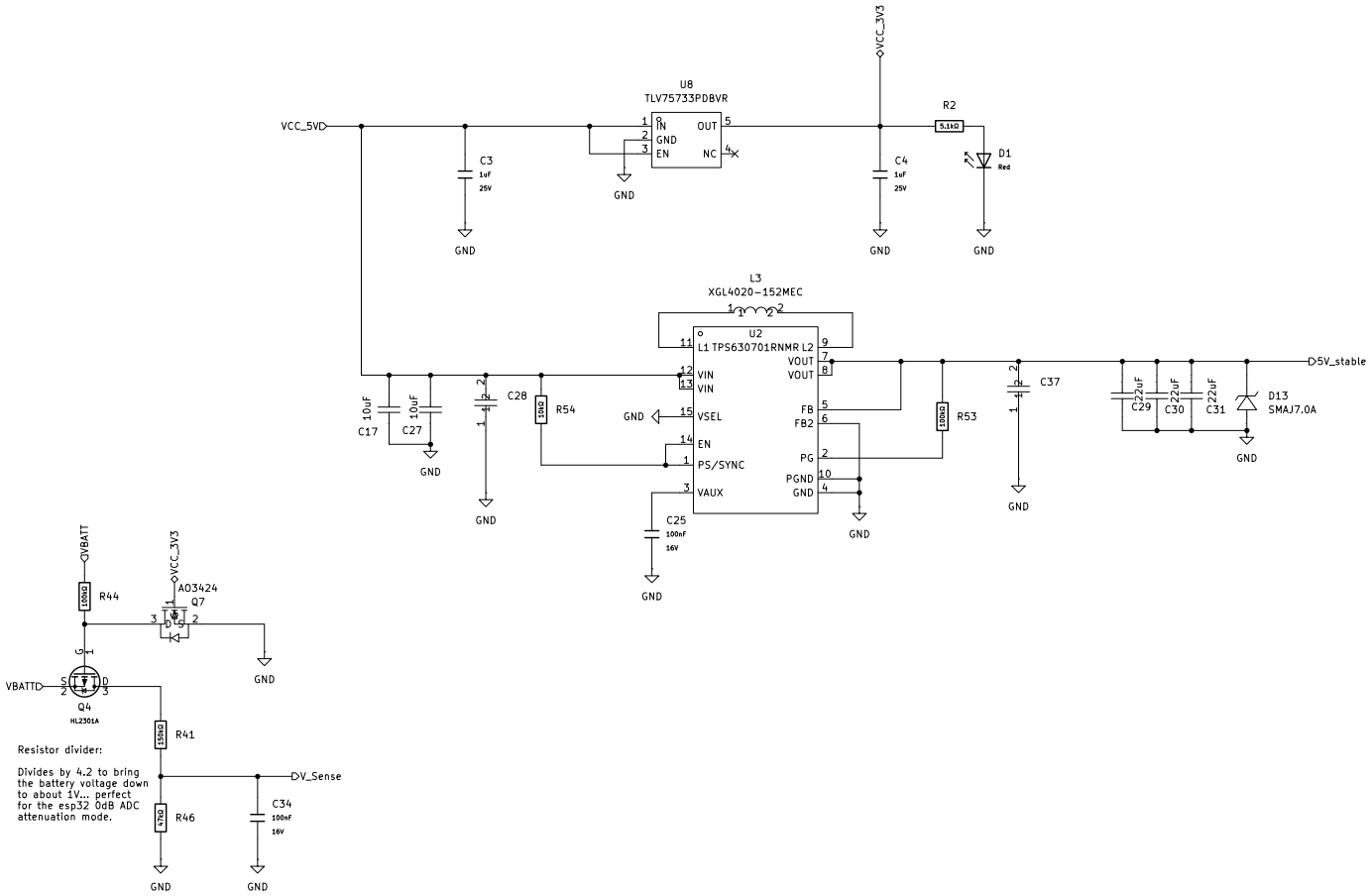
VCC_5V
U8
TLV75733PDBVR
IN
GND
EN
OUT
NC
C3
1uF
25V
C4
1uF
25V
VCC_3V3
R2
5.1kΩ
D1
Red
L3
XGL4020-152MEC
U2
TPS630701RNMR
L1
L2
VIN
VSEL
EN
PS/SYNC
VAUX
VOUT
FB
FB2
PG
PGND
C17
10uF
C27
10uF
C28
10kΩ
R54
C25
100nF
16V
R53
100kΩ
C37
C29
22uF
C30
22uF
C31
22uF
D13
SMAJ7.0A
5V_stable
VBATT
R44
100kΩ
AO3424
Q7
Q4
HL2301A
R41
150kΩ
R46
47kΩ
C34
100nF
16V
V_Sense
Resistor divider:
Divides by 4.2 to bring the battery voltage down to about 1V... perfect for the esp32 0dB ADC attenuation mode.

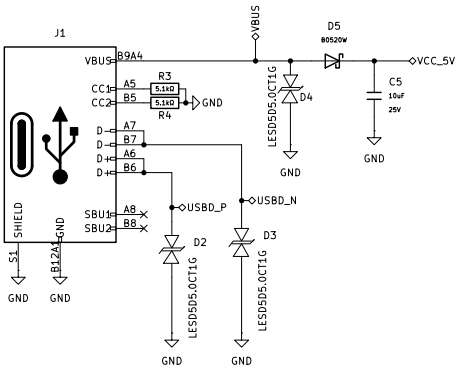
J1
VBUS
B9A4
CC1
A5
CC2
B5
R3
5.1kΩ
5.1kΩ
R4
GND
D-
A7
D-
B7
D+
A6
D+
B6
SBU1
A8
SBU2
B8
SHIELD
S1
GND
B12A1
GND
USBD_P
USBD_N
D2
LESD5D5.0CT1G
D3
LESD5D5.0CT1G
GND
GND
VBUS
D5
B0520W
VCC_5V
LESD5D5.0CT1G
D4
GND
C5
10uF
25V
GND

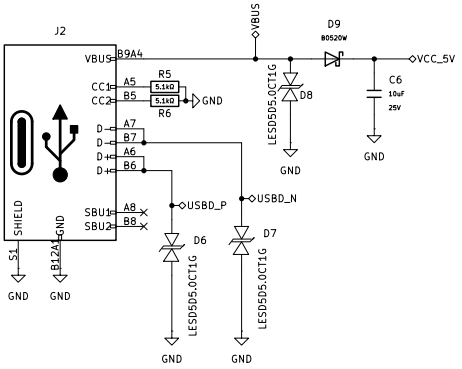
J2
VBUS
B9A4
CC1
A5
CC2
B5
R5
5.1kΩ
5.1kΩ
R6
GND
D-
A7
D-
B7
D+
A6
D+
B6
SBU1
A8
SBU2
B8
SHIELD
S1
GND
B12A1
GND
USBD_P
USBD_N
D6
LESD5D5.0CT1G
GND
D7
LESD5D5.0CT1G
GND
VBUS
LESD5D5.0CT1G
D8
GND
D9
B0520W
VCC_5V
C6
10uF
25V
GND

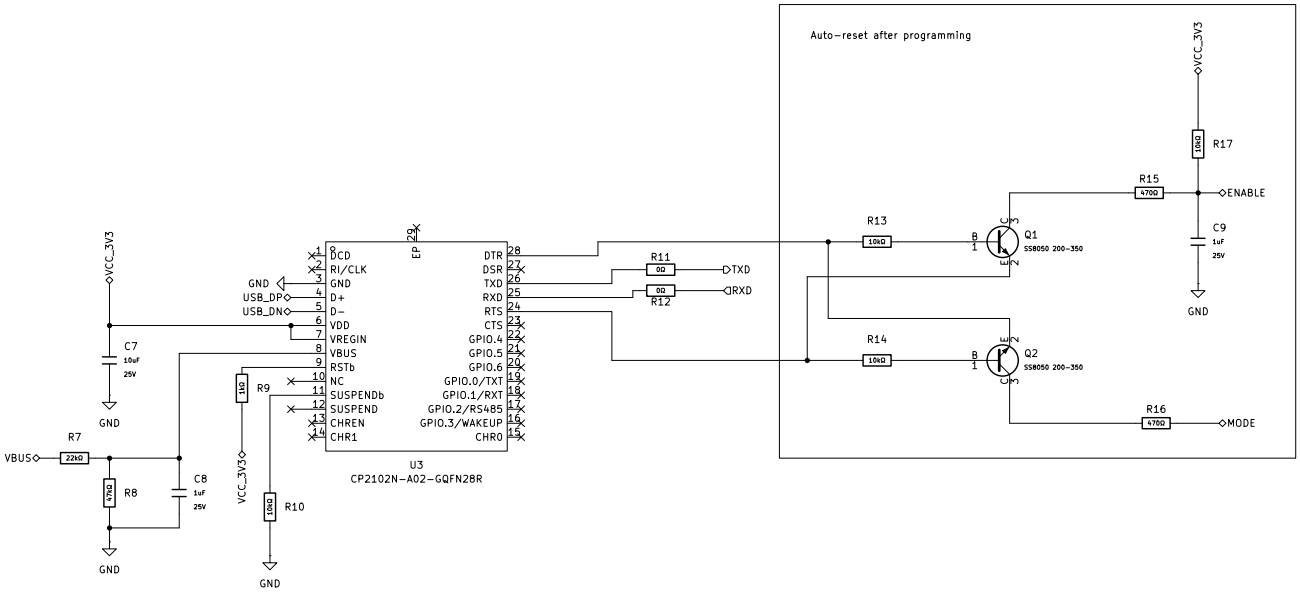
Auto-reset after programming
VCC_3V3
R17
10kΩ
R15
470Ω
ENABLE
C9
1uF
25V
GND
R13
10kΩ
Q1
SS8050 200-350
R14
10kΩ
Q2
SS8050 200-350
R16
470Ω
MODE
VCC_3V3
C7
10uF
25V
GND
R7
22kΩ
VBUS
R8
470Ω
C8
1uF
25V
GND
1kΩ
R9
VCC_3V3
R10
10kΩ
GND
GND
USB_DP
USB_DN
DCD
RI/CLK
GND
D+
D-
VDD
VREGIN
VBUS
RSTb
NC
SUSPENDb
SUSPEND
CHREN
CHR1
EP
DTR
DSR
TXD
RXD
RTS
CTS
GPIO.4
GPIO.5
GPIO.6
GPIO.0/TXT
GPIO.1/RXT
GPIO.2/RS485
GPIO.3/WAKEUP
CHR0
U3
CP2102N-A02-GQFN28R
R11
0Ω
R12
0Ω
TXD
RXD

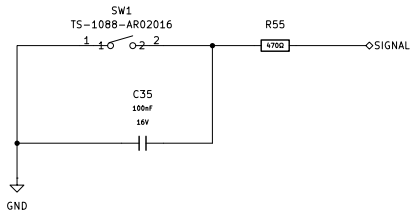
SW1
TS-1088-AR02016
1
1
2
2
R55
470Ω
SIGNAL
C35
100nF
16V
GND

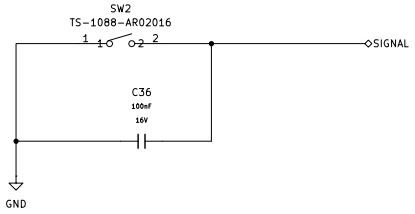
SW2
TS-1088-AR02016
1
1
2
2
SIGNAL
C36
100nF
16V
GND

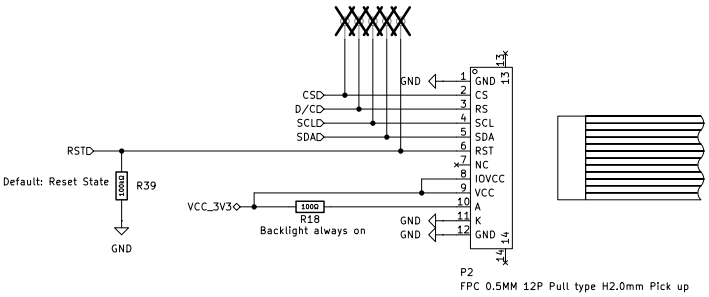
GND
CS
D/C
SCL
SDA
RST
Default: Reset State
100kΩ
R39
GND
VCC_3V3
100Ω
R18
Backlight always on
GND
GND
1 GND
2 CS
3 RS
4 SCL
5 SDA
6 RST
7 NC
8 IOVCC
9 VCC
10 A
11 K
12 GND
13
14
P2
FPC 0.5MM 12P Pull type H2.0mm Pick up

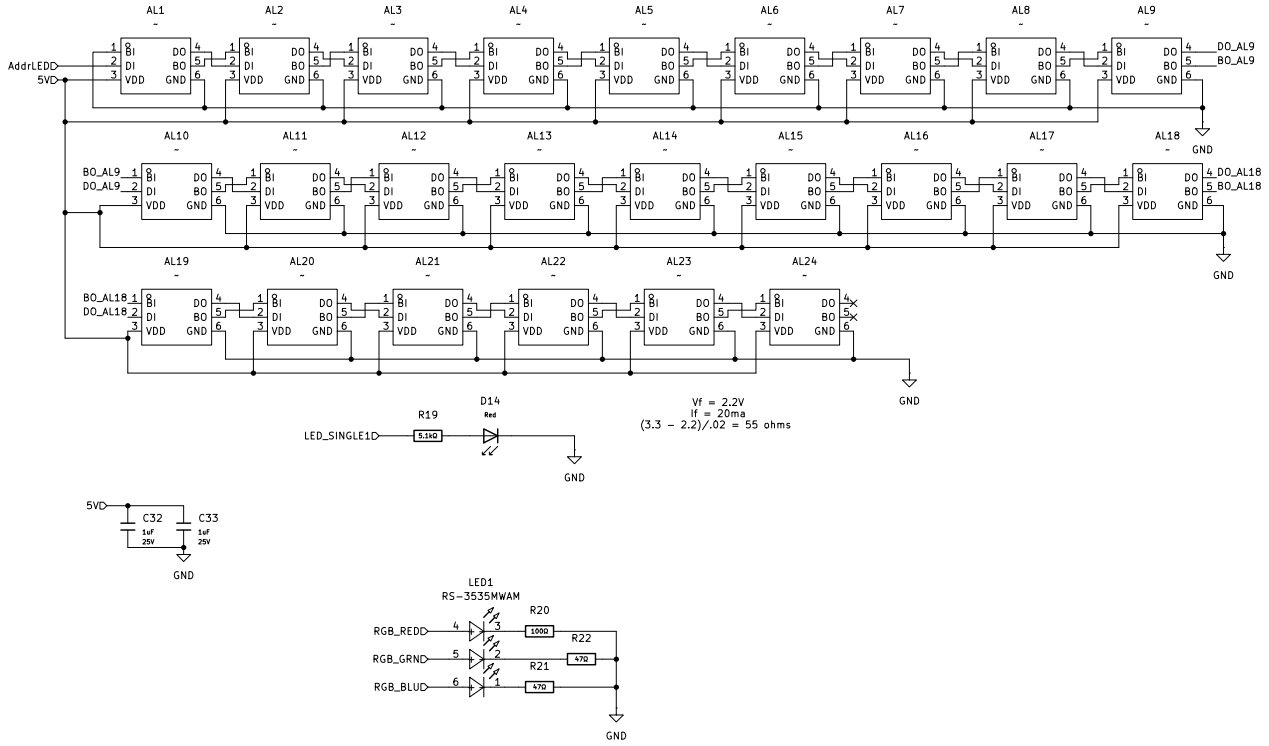
AL1
AL2
AL3
AL4
AL5
AL6
AL7
AL8
AL9
AL10
AL11
AL12
AL13
AL14
AL15
AL16
AL17
AL18
AL19
AL20
AL21
AL22
AL23
AL24
AddrLED
5V
DO_AL9
BO_AL9
BO_AL9
DO_AL9
DO_AL18
BO_AL18
BO_AL18
DO_AL18
BI
DI
VDD
DO
BO
GND
GND
GND
GND
Vf = 2.2V
If = 20ma
(3.3 - 2.2)/.02 = 55 ohms
R19
5.1kΩ
D14
Red
LED_SINGLE1
GND
5V
C32
1uF
25V
C33
1uF
25V
GND
LED1
RS-3535MWAM
RGB_RED
RGB_GRN
RGB_BLU
R20
100Ω
R22
47Ω
R21
47Ω
GND

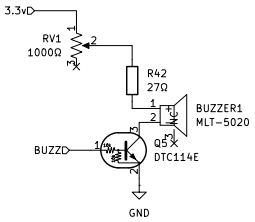
3.3v
RV1
1000Ω
R42
27Ω
BUZZER1
MLT-5020
BUZZ
Q5
DTC114E
GND

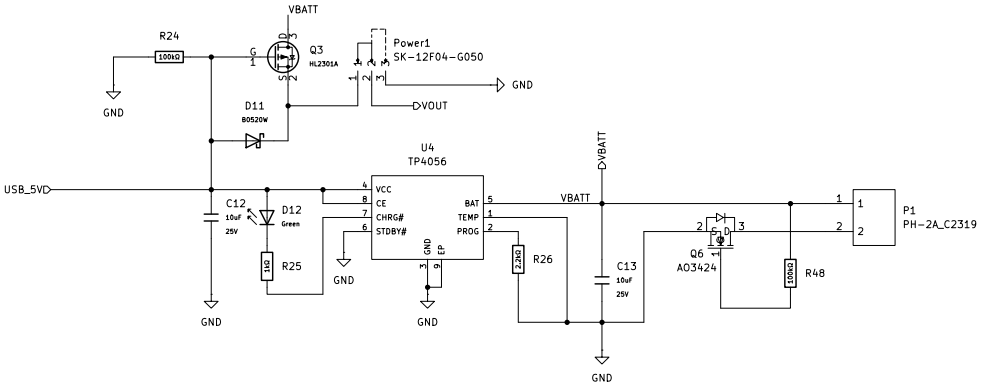
VBATT
R24
100kΩ
Q3
HL2301A
Power1
SK-12F04-G050
GND
VOUT
D11
B0520W
U4
TP4056
USB_5V
VCC
CE
CHRG#
STDBY#
BAT
TEMP
PROG
GND
EP
C12
10uF
25V
D12
Green
1kΩ
R25
2.2kΩ
R26
C13
10uF
25V
Q6
AO3424
100kΩ
R48
P1
PH-2A_C2319

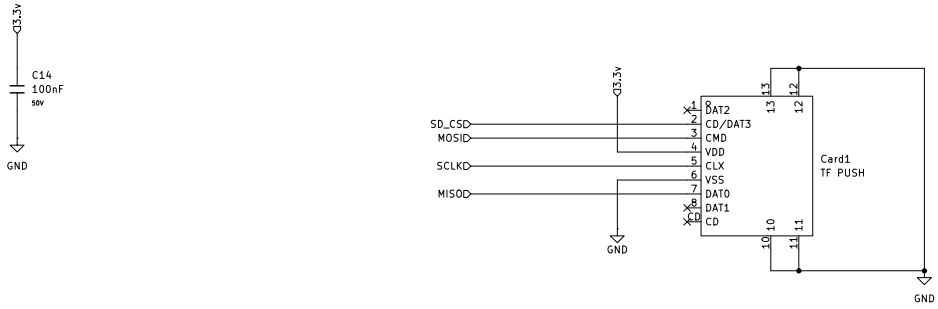
3.3v
C14
100nF
50v
GND
3.3v
SD_CS
MOSI
SCLK
MISO
GND
1 DAT2
2 CD/DAT3
3 CMD
4 VDD
5 CLX
6 VSS
7 DAT0
8 DAT1
9 CD
13
12
10
11
Card1
TF PUSH
GND

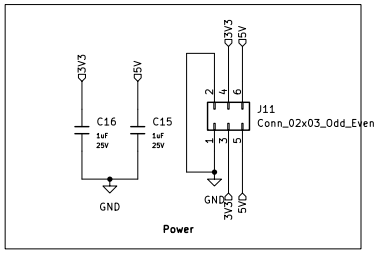
3V3
5V
C16
1uF
25V
C15
1uF
25V
GND
J11
Conn_02x03_Odd_Even
GND
3V3
5V
Power

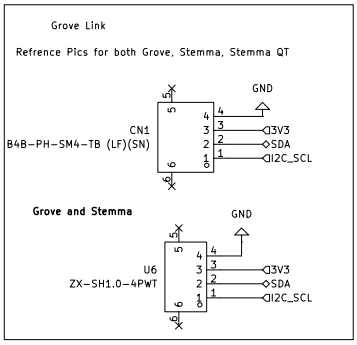
Grove Link
Refrence Pics for both Grove, Stemma, Stemma QT
GND
CN1
B4B-PH-SM4-TB (LF)(SN)
3V3
SDA
I2C_SCL
Grove and Stemma
GND
U6
ZX-SH1.0-4PWT
3V3
SDA
I2C_SCL

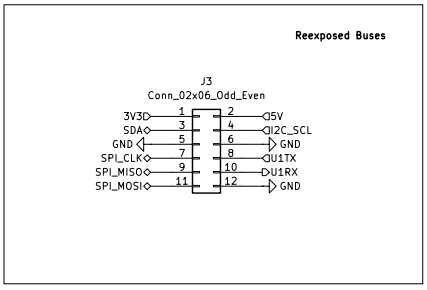
Reexposed Buses
J3
Conn_02x06_Odd_Even
3V3
SDA
GND
SPI_CLK
SPI_MISO
SPI_MOSI
5V
I2C_SCL
GND
U1TX
U1RX
GND

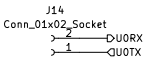
J14
Conn_01x02_Socket
U0RX
U0TX

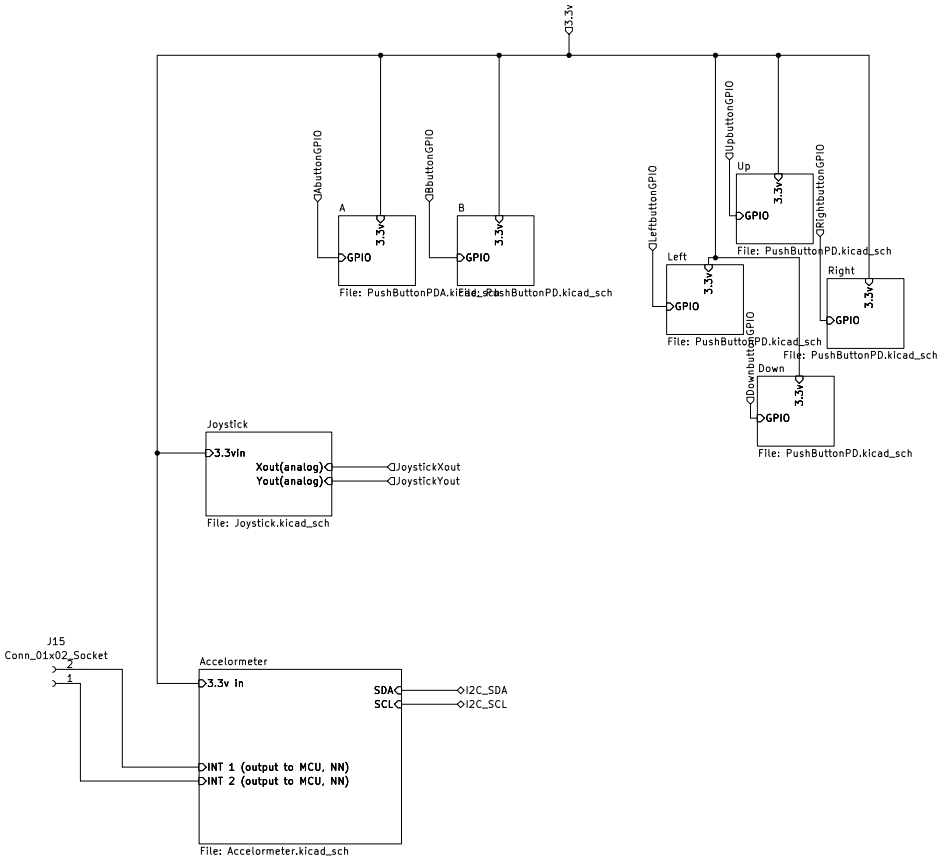
3.3v
AbuttonGPIO
BbuttonGPIO
UpbuttonGPIO
LeftbuttonGPIO
RightbuttonGPIO
DownbuttonGPIO
A
B
Up
Left
Right
Down
3.3v
GPIO
File: PushButtonPDA.kicad_sch
File: PushButtonPD.kicad_sch
Joystick
3.3vin
Xout(analog)
Yout(analog)
JoystickXout
JoystickYout
File: Joystick.kicad_sch
J15
Conn_01x02_Socket
2
1
Accelormeter
3.3v in
SDA
SCL
I2C_SDA
I2C_SCL
INT 1 (output to MCU, NN)
INT 2 (output to MCU, NN)
File: Accelormeter.kicad_sch

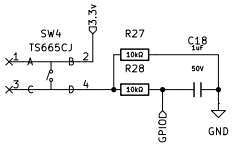
3.3v
SW4
TS665CJ
1
A
B
2
3
C
D
4
R27
10kΩ
R28
10kΩ
C18
1uF
50V
GPIO0
GND

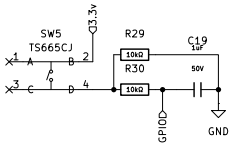
3.3v
SW5
TS665CJ
1
A
B
2
3
C
D
4
R29
10kΩ
R30
10kΩ
C19
1uF
50V
GPIO0
GND

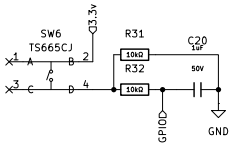
3.3v
SW6
TS665CJ
1
A
B
2
3
C
D
4
R31
10kΩ
R32
10kΩ
C20
1uF
50V
GPIO0
GND

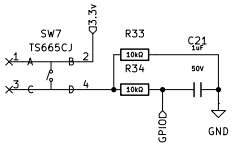
3.3v
SW7
TS665CJ
1
A
B
2
3
C
D
4
R33
10kΩ
R34
10kΩ
C21
1uF
50V
GPIO0
GND

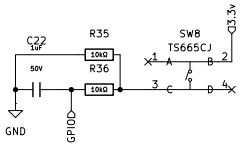
C22
1uF
50V
R35
10kΩ
R36
10kΩ
SW8
TS665CJ
1
A
B
2
3
C
D
4
3.3v
GND
GPIO0

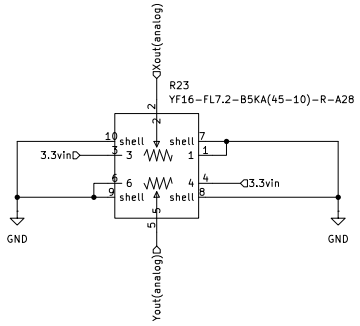
Xout(analog)
R23
YF16-FL7.2-B5KA(45-10)-R-A28
2
10
shell
shell
7
3.3vin
3
1
1
6
4
3.3vin
9
shell
shell
8
5
GND
GND
Yout(analog)

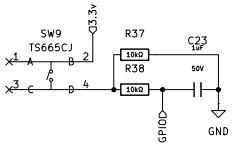
3.3v
SW9
TS665CJ
1
A
B
2
3
C
D
4
R37
10kΩ
R38
10kΩ
C23
1uF
50V
GPIO0
GND

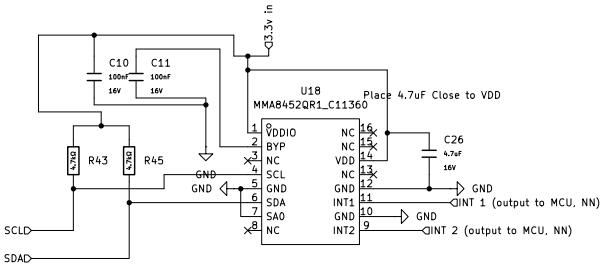

With SA0 Low, 001110 (0x1C) is the address, if high, its (0x1D)

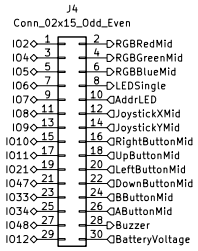
J4
Conn_02x15_Odd_Even
IO2 1 2 RGBRedMid
IO4 3 4 RGBGreenMid
IO5 5 6 RGBBlueMid
IO6 7 8 LEDSingle
IO7 9 10 AddrLED
IO8 11 12 JoystickXMid
IO9 13 14 JoystickYMid
IO10 15 16 RightButtonMid
IO11 17 18 UpButtonMid
IO21 19 20 LeftButtonMid
IO47 21 22 DownButtonMid
IO33 23 24 BButtonMid
IO34 25 26 AButtonMid
IO48 27 28 Buzzer
IO12 29 30 BatteryVoltage

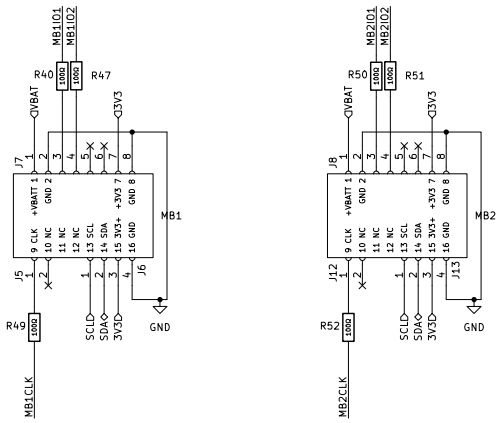
MB1IO1
MB1IO2
R40
100Ω
R47
100Ω
VBAT
3V3
J7
1 +VBATT
2 GND
3
4
5
6
7
8
9 CLK
10 NC
11 NC
12 NC
13 SCL
14 SDA
15 3V3+
16 GND
+3V3
GND
MB1
J5
J6
R49
100Ω
MB1CLK
SCL
SDA
3V3
GND
MB2IO1
MB2IO2
R50
100Ω
R51
100Ω
VBAT
3V3
J8
1 +VBATT
2 GND
3
4
5
6
7
8
9 CLK
10 NC
11 NC
12 NC
13 SCL
14 SDA
15 3V3+
16 GND
+3V3
GND
MB2
J12
J13
R52
100Ω
MB2CLK
SCL
SDA
3V3
GND

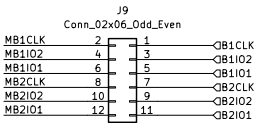
J9
Conn_02x06_Odd_Even
MB1CLK 2 1 B1CLK
MB1IO2 4 3 B1IO2
MB1IO1 6 5 B1IO1
MB2CLK 8 7 B2CLK
MB2IO2 10 9 B2IO2
MB2IO1 12 11 B2IO1