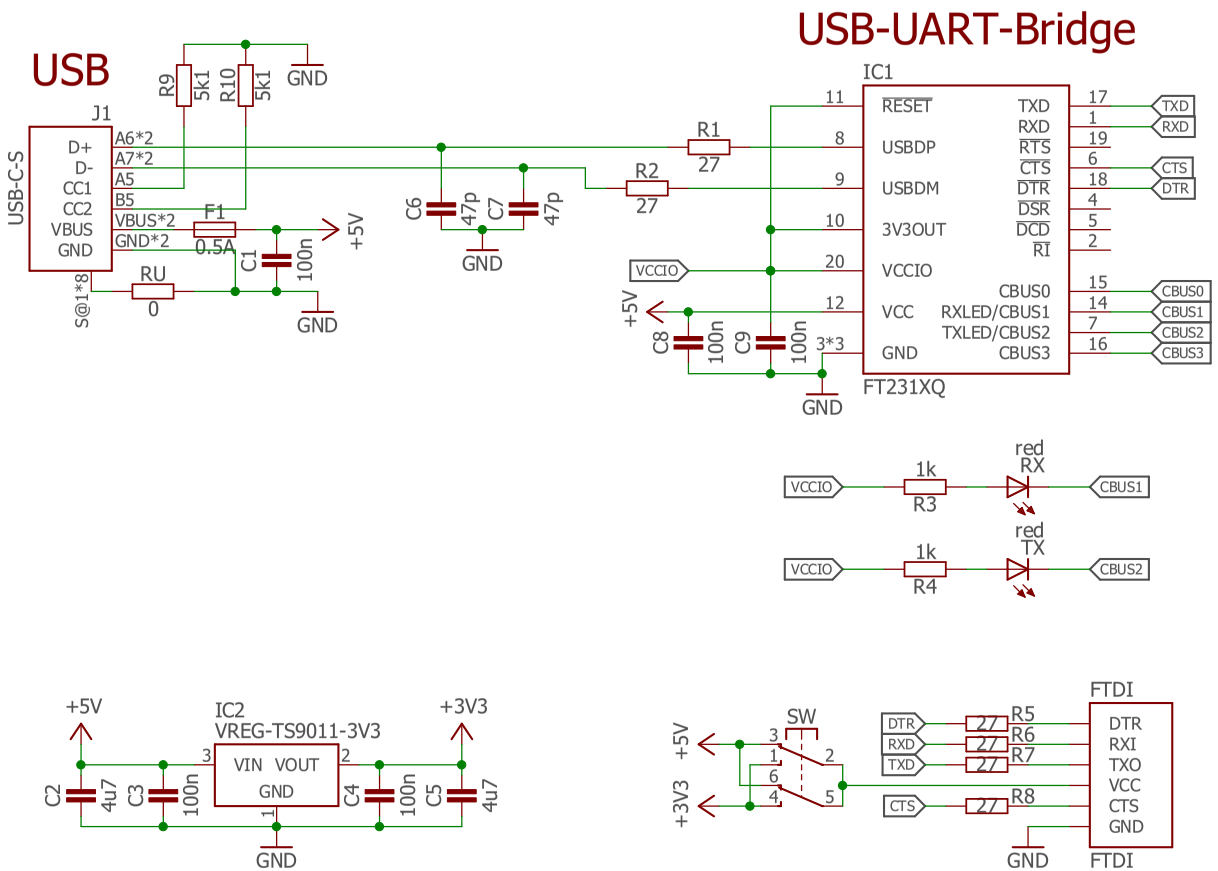

Released under the Creative Commons Attribution Share-Alike License. http://creativecommons.org/licenses/by-sa/4.0/

Designed by Andreas Watterott (Watterott electronic)

Watterott | Watterott | OS HW | CE | WEEE

www.watterott.com

FTDI-Breakout_v30

28.07.2020 12:45

Sheet: 1/1

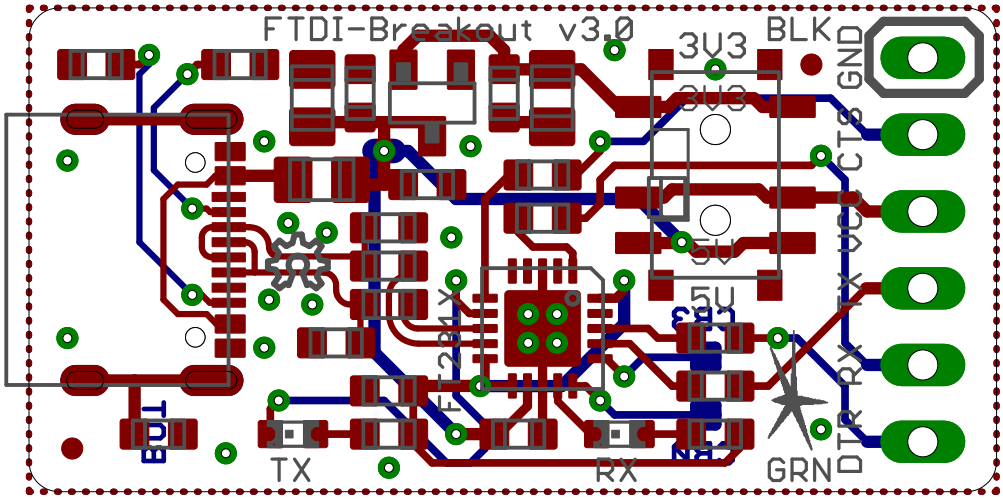
FTDI-Breakout v3.0
3V3
BLK
GND
CTS
VCC
RX
TX
DTR
GRN
5V
C3
BUT
TX
RX