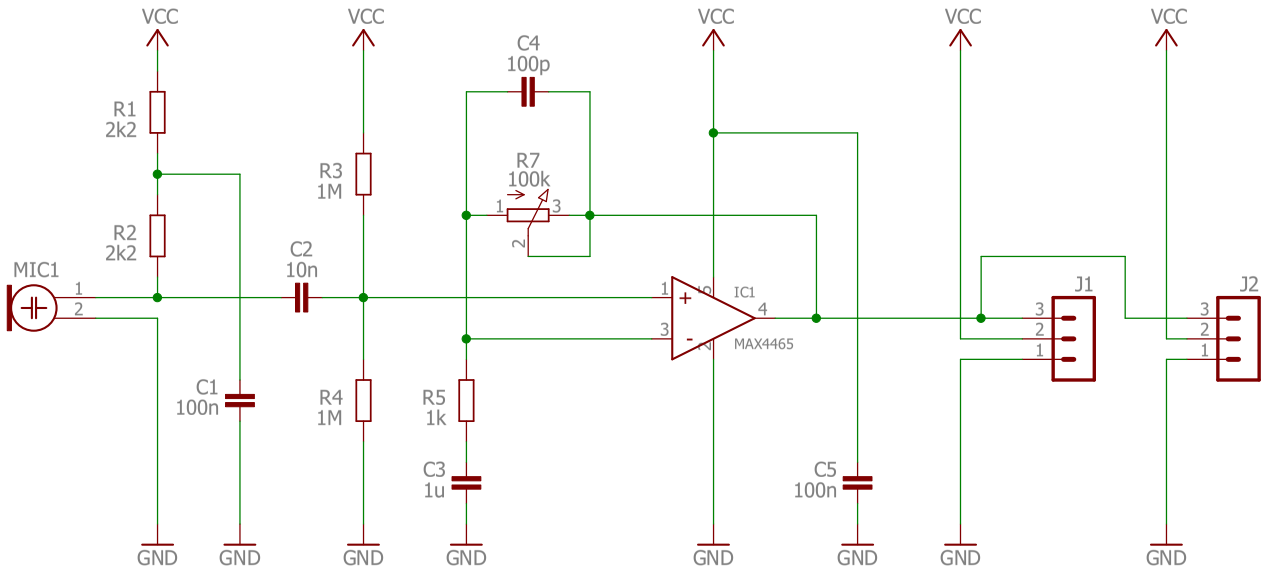

Released under the Creative Commons Attribution Share-Alike License. http://creativecommons.org/licenses/by-sa/4.0/

Designed by Stephan Watterott (Watterott electronic)

Watterott

OSHW

www.watterott.com

Mic-Breakout_v11

10.04.2016 12:55

Sheet: 1/1

Mic-Breakout
100n
2k2
2k2
10n
1k
1k
400p
1M
100n
MAX4465
100k
Gain
-
+
S