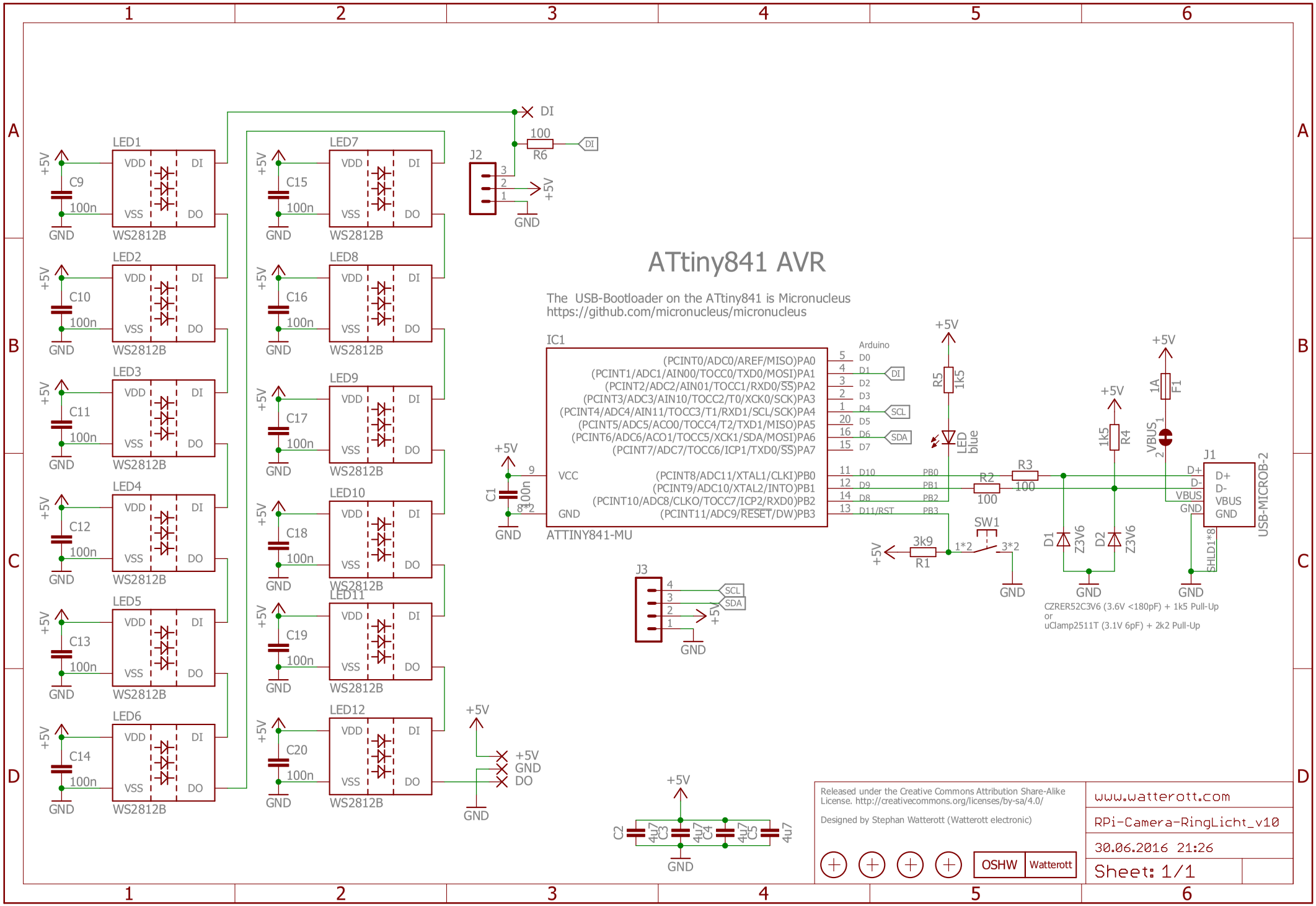
ATtiny841 AVR
The USB-Bootloader on the ATtiny841 is Micronucleus
https://github.com/micronucleus/micronucleus
IC1
ATTINY841-MU
(PCINT0/ADC0/AREF/MISO)PA0
(PCINT1/ADC1/AIN00/TOCC0/TXD0/MOSI)PA1
(PCINT2/ADC2/AIN01/TOCC1/RXD0/SS)PA2
(PCINT3/ADC3/AIN10/TOCC2/T0/XCK0/SCK)PA3
(PCINT4/ADC4/AIN11/TOCC3/T1/RXD1/SCL/SCK)PA4
(PCINT5/ADC5/ACO0/TOCC4/T2/TXD1/MISO)PA5
(PCINT6/ADC6/ACO1/TOCC5/XCK1/SDA/MOSI)PA6
(PCINT7/ADC7/TOCC6/ICP1/TXD0/SS)PA7
(PCINT8/ADC11/XTAL1/CLKI)PB0
(PCINT9/ADC10/XTAL2/INTO)PB1
(PCINT10/ADC8/CLKO/TOCC7/ICP2/RXD0)PB2
(PCINT11/ADC9/RESET/DW)PB3
VCC
GND
Arduino
D0
D1
D2
D3
D4
D5
D6
D7
D10
D9
D8
D11/RST
PB0
PB1
PB2
PB3
DI
SCL
SDA
LED1
LED2
LED3
LED4
LED5
LED6
LED7
LED8
LED9
LED10
LED11
LED12
WS2812B
VDD
VSS
DI
DO
C9
C10
C11
C12
C13
C14
C15
C16
C17
C18
C19
C20
100n
+5V
GND
J2
J3
R6
100
R5
1k5
LED blue
R3
100
R2
100
R4
1k5
R1
3k9
SW1
1*2
3*2
D1
Z3V6
D2
Z3V6
F1
1A
VBUS
J1
D+
D-
VBUS
GND
USB-MICROB-2
SHLD1*8
C1
100n
8*2
CZRER52C3V6 (3.6V <180pF) + 1k5 Pull-Up
or
uClamp2511T (3.1V 6pF) + 2k2 Pull-Up
C2
C3
C4
C5
4u7
Released under the Creative Commons Attribution Share-Alike License. http://creativecommons.org/licenses/by-sa/4.0/
Designed by Stephan Watterott (Watterott electronic)
OSHW
Watterott
www.watterott.com
RPi-Camera-RingLicht_v10
30.06.2016 21:26
Sheet: 1/1

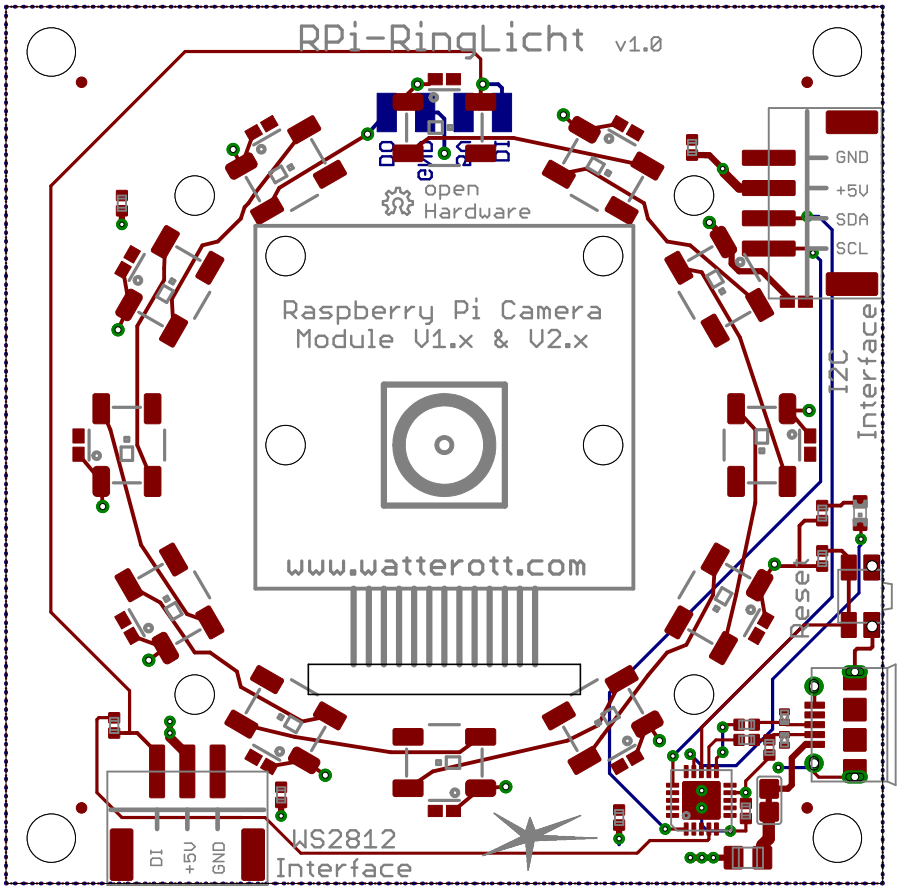
RPi-RingLicht
v1.0
open
Hardware
Raspberry Pi Camera
Module V1.x & V2.x
www.watterott.com
GND
+5V
SDA
SCL
I2C
Interface
Reset
DI
+5V
GND
WS2812
Interface