Channel Coding Part II

Digital Communication
Chapter 6 & 7

Ola Jetlund

November 1, 2007

Introduction
Linear Block Codes
Hamming
Convolutional Codes
Example
Decoding
Decisions
Viterbi

Last Week

- Channel Coding
- Linear Block Codes
- Convolutional Codes

Introduction
Linear Block Codes
Hamming
Convolutional Codes
Example
Decoding
Decisions
Viterbi

Linear Block Codes (n, k), I

Coding is a mapping from one space to another:

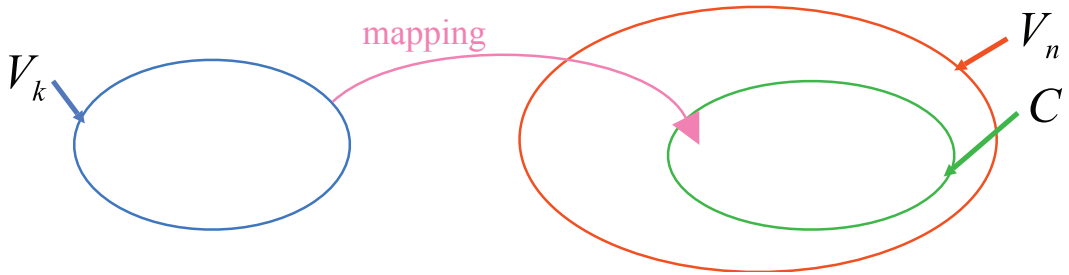

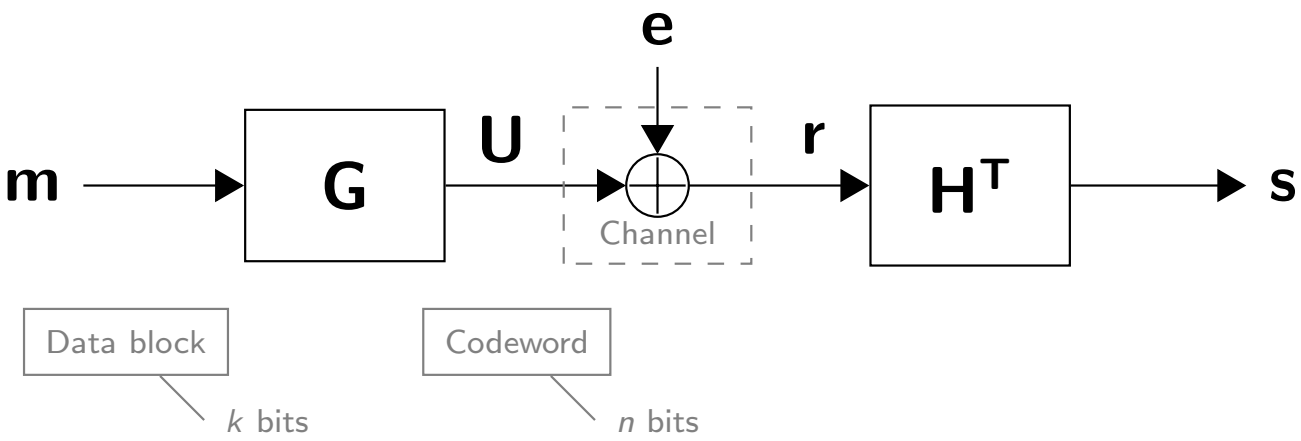

$$\mathbf{s} = \mathbf{r} \cdot \mathbf{H}^T \qquad \mathbf{r} = \mathbf{U} + \mathbf{e} \qquad \mathbf{U} = \mathbf{m} \cdot \mathbf{G} \qquad \mathbf{G} \cdot \mathbf{H}^T = \mathbf{0}$$

$$\mathbf{s} = \mathbf{r} \cdot \mathbf{H}^T = (\mathbf{U} + \mathbf{e}) \cdot \mathbf{H}^T = (\mathbf{m} \cdot \mathbf{G} + \mathbf{e}) \cdot \mathbf{H}^T \mathbf{m} \cdot \mathbf{G} \cdot \mathbf{H}^T + \mathbf{e} \cdot \mathbf{H}^T$$
$$= \mathbf{m} \cdot \mathbf{0} + \mathbf{e} \cdot \mathbf{H}^T = \mathbf{0} + \mathbf{e} \cdot \mathbf{H}^T = \mathbf{e} \cdot \mathbf{H}^T.$$

Hamming distance and weight

- Hamming weight: $w(\mathbf{U}_i) =$ the number of non-zero elements in $\mathbf{U}_i$.
- Hamming distance: $d(\mathbf{U}_i, \mathbf{U}_j) = w(\mathbf{U}_i \oplus \mathbf{U}_j)$
- Minimum distance:

$$d_{\min} = \min_{i \neq j} d(\mathbf{U}_i, \mathbf{U}_j) = \min_i w(\mathbf{U}_i)$$

Convolutional codes

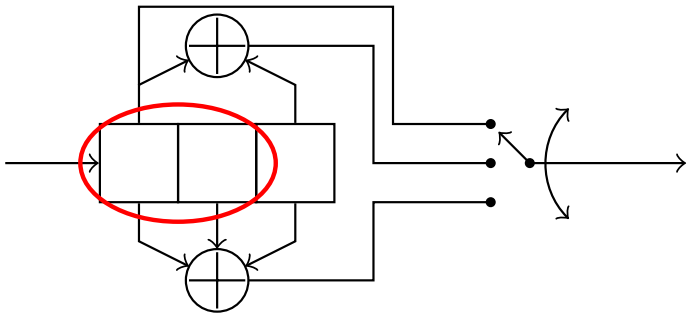

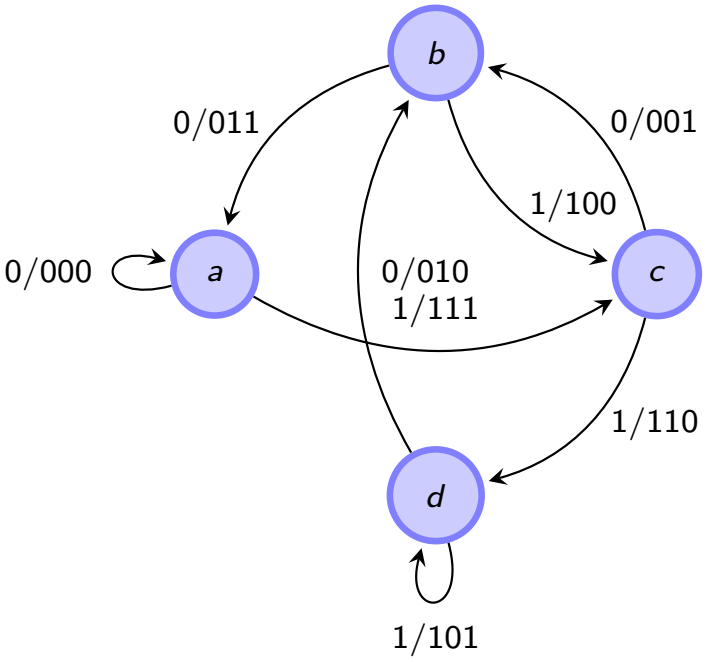

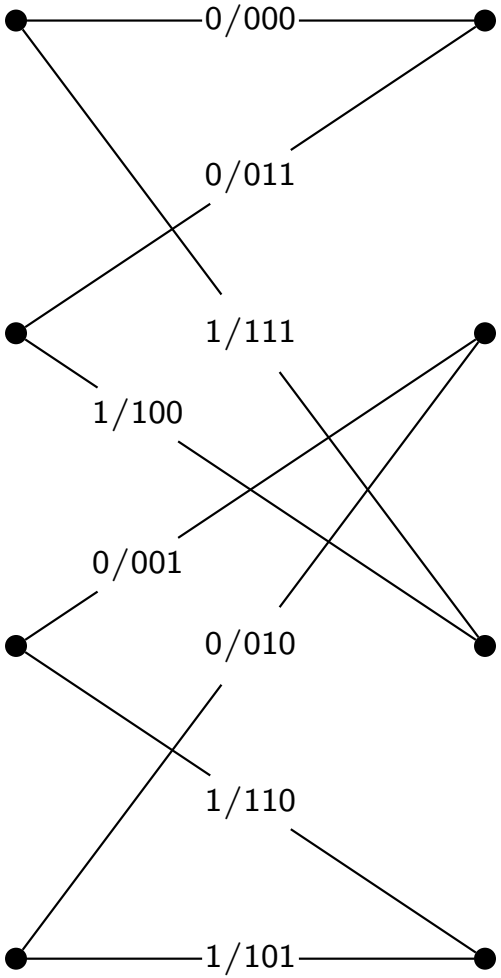

Today

More details on the Convolutional codes

- State diagram and trellis representation of the code - another example.
- How the decoding is performed for Convolutional codes?
- What is a Maximum likelihood decoder?
- What are the soft decisions and hard decisions?
- How does the Viterbi algorithm work?

Block Diagram of the DCS

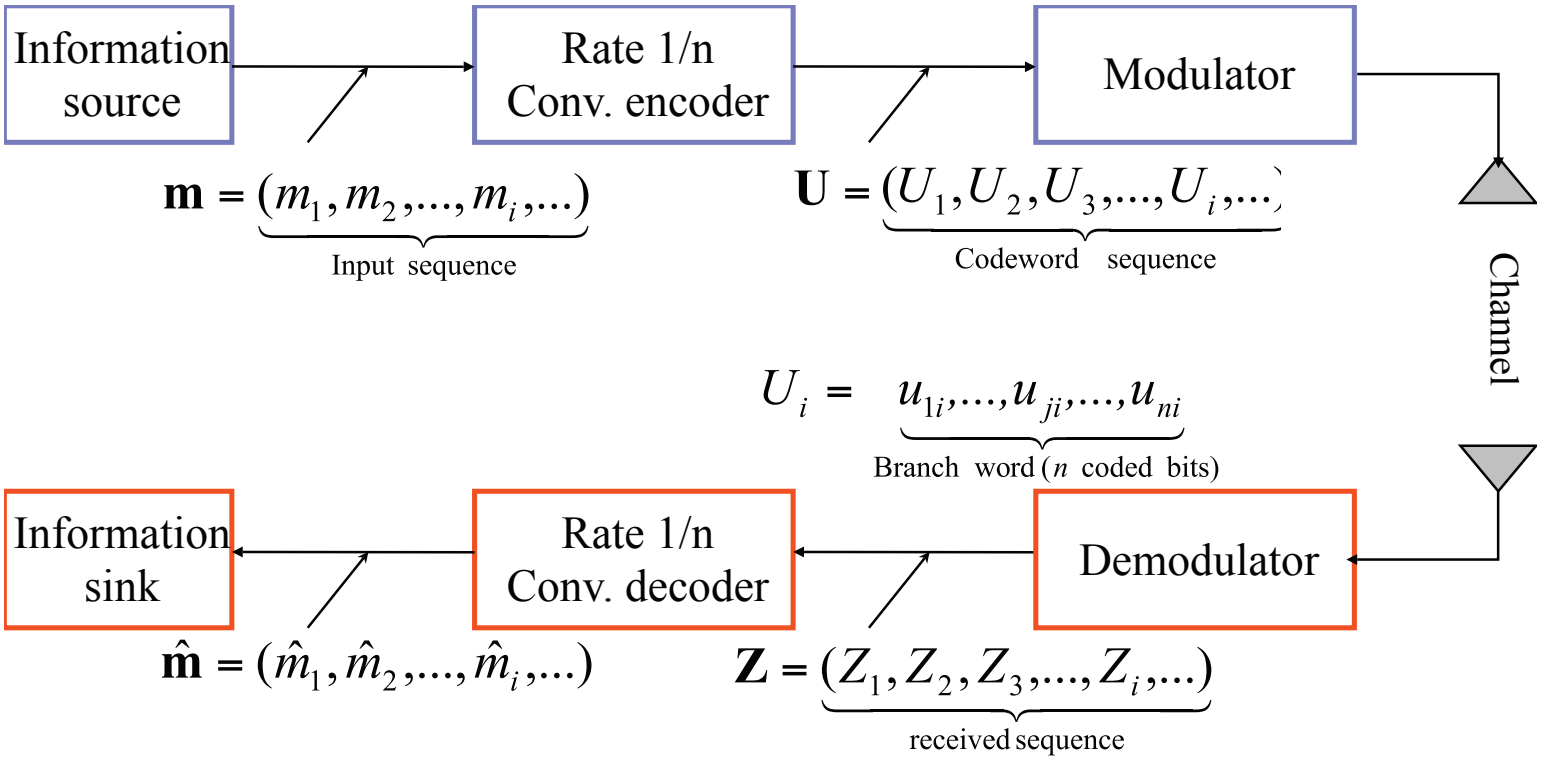

$$\mathbf{m} = \underbrace{(m_1, m_2, \ldots, m_i, \ldots)}_{\text{Input sequence}}$$

$$\mathbf{U} = \underbrace{(U_1, U_2, U_3, \ldots, U_i, \ldots)}_{\text{Codeword sequence}}$$

$$U_i = \underbrace{u_{1i}, \ldots, u_{ji}, \ldots, u_{ni}}_{\text{Branch word } (n \text{ coded bits})}$$

$$\hat{\mathbf{m}} = (\hat{m}_1, \hat{m}_2, \ldots, \hat{m}_i, \ldots)$$

$$\mathbf{Z} = \underbrace{(Z_1, Z_2, Z_3, \ldots, Z_i, \ldots)}_{\text{received sequence}}$$

$$\underbrace{Z_i}_{\substack{\text{Demodulator outputs} \\ \text{for Branch word } i}} = \underbrace{z_{1i}, \ldots, z_{ji}, \ldots, z_{ni}}_{n \text{ outputs per Branch word}}$$

The encoder today

A Rate $\frac{1}{2}$ Convolutional encoder

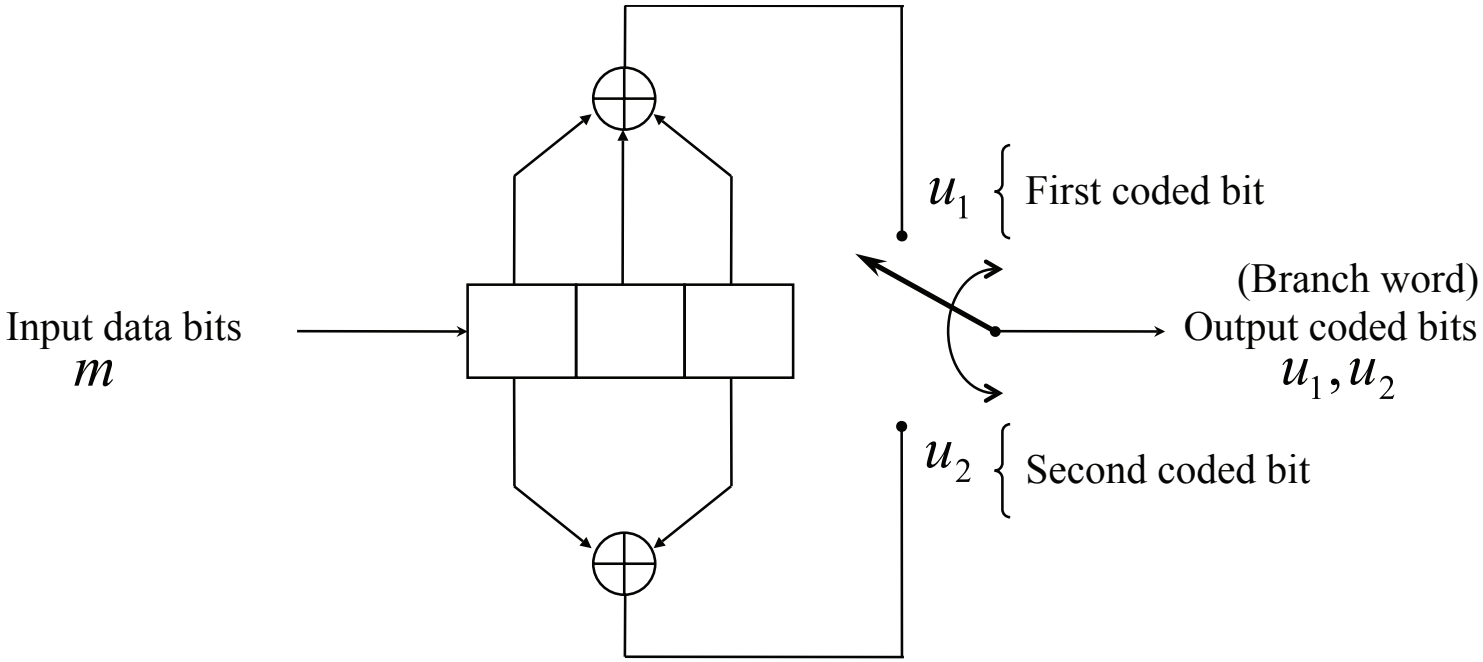

State Diagram

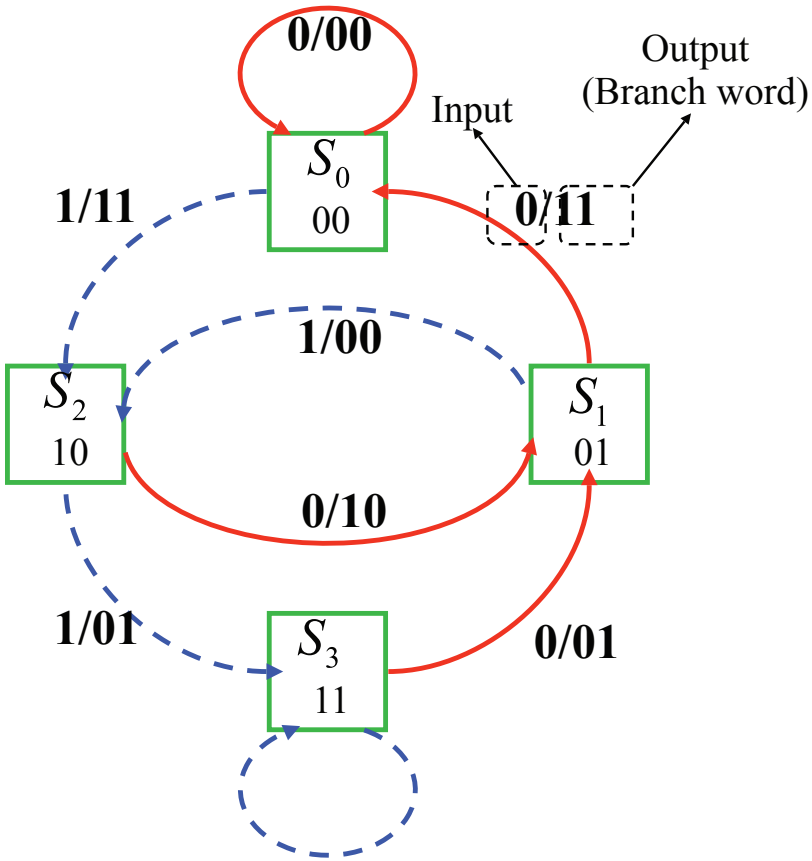

Current state	input	Next state	output
S_0 00	0	S_0	0
	1	S_2	11
S_1 01	0	S_0	11
	1	S_2	0
S_2 10	0	S_1	10
	1	S_3	1
S_3 11	0	S_1	1
	1	S_3	10

Effective code rate

- Initialize the memory before encoding the first bit (all-zero)
- Clear out the memory after encoding the last bit (all-zero)
- Hence, a tail of zero-bits is appended to data bits.

- Effective code rate :
- L is the number of data bits and $k = 1$ is assumed:

$$R_{\text{eff}} = \frac{L}{n(K + K - 1)} < R_c$$

Trellis I

Trellis diagram is an extension of the state diagram that shows the passage of time.
Example of a section of trellis for the rate code

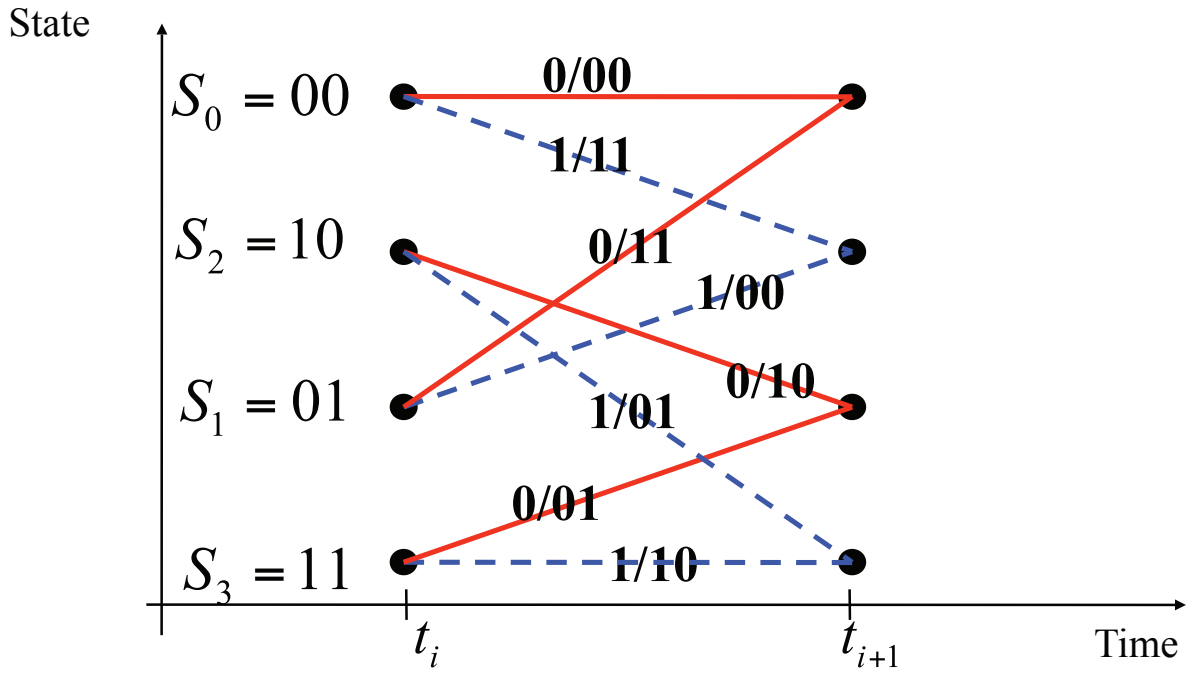

Trellis II

Example sequence:

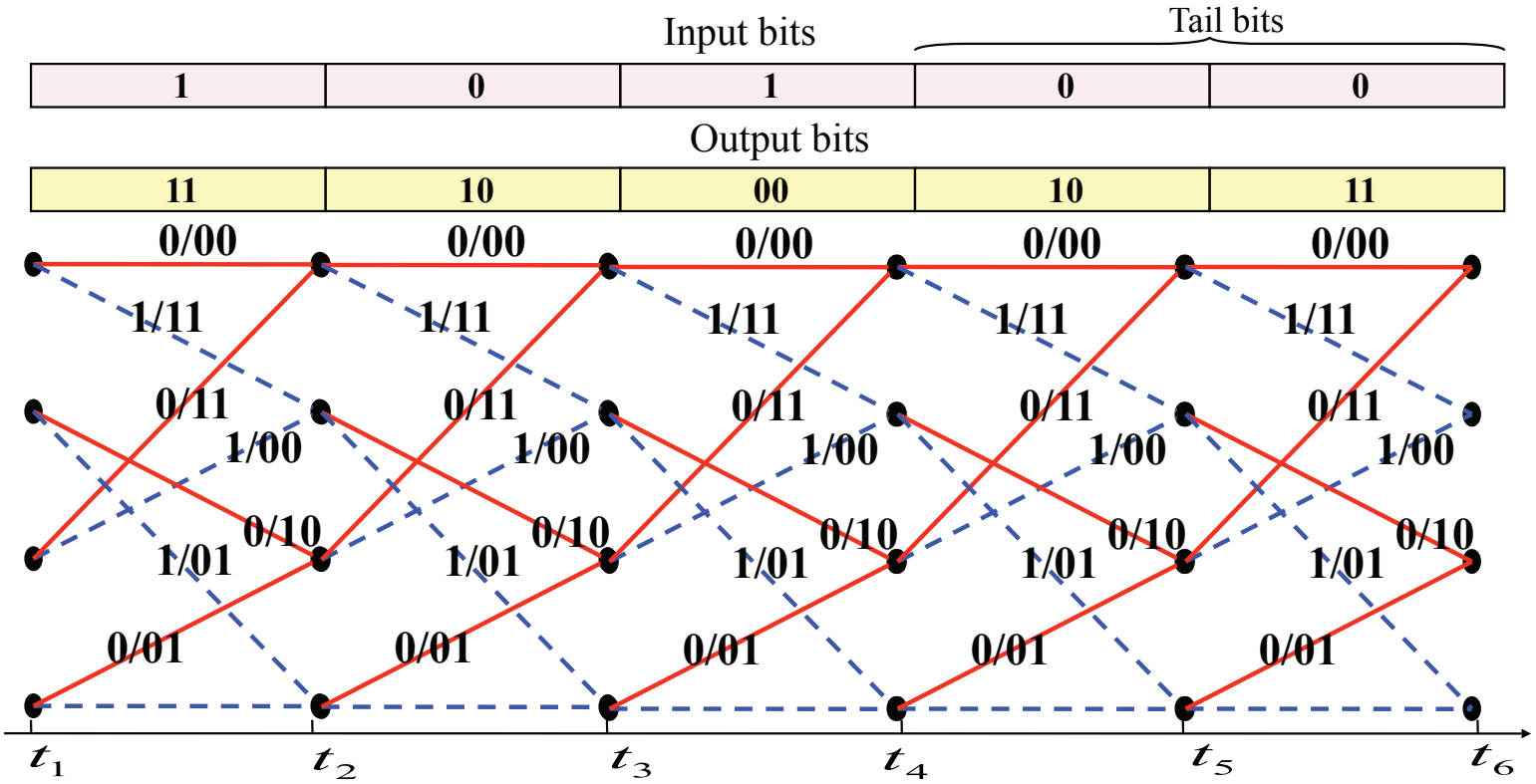

Trellis III

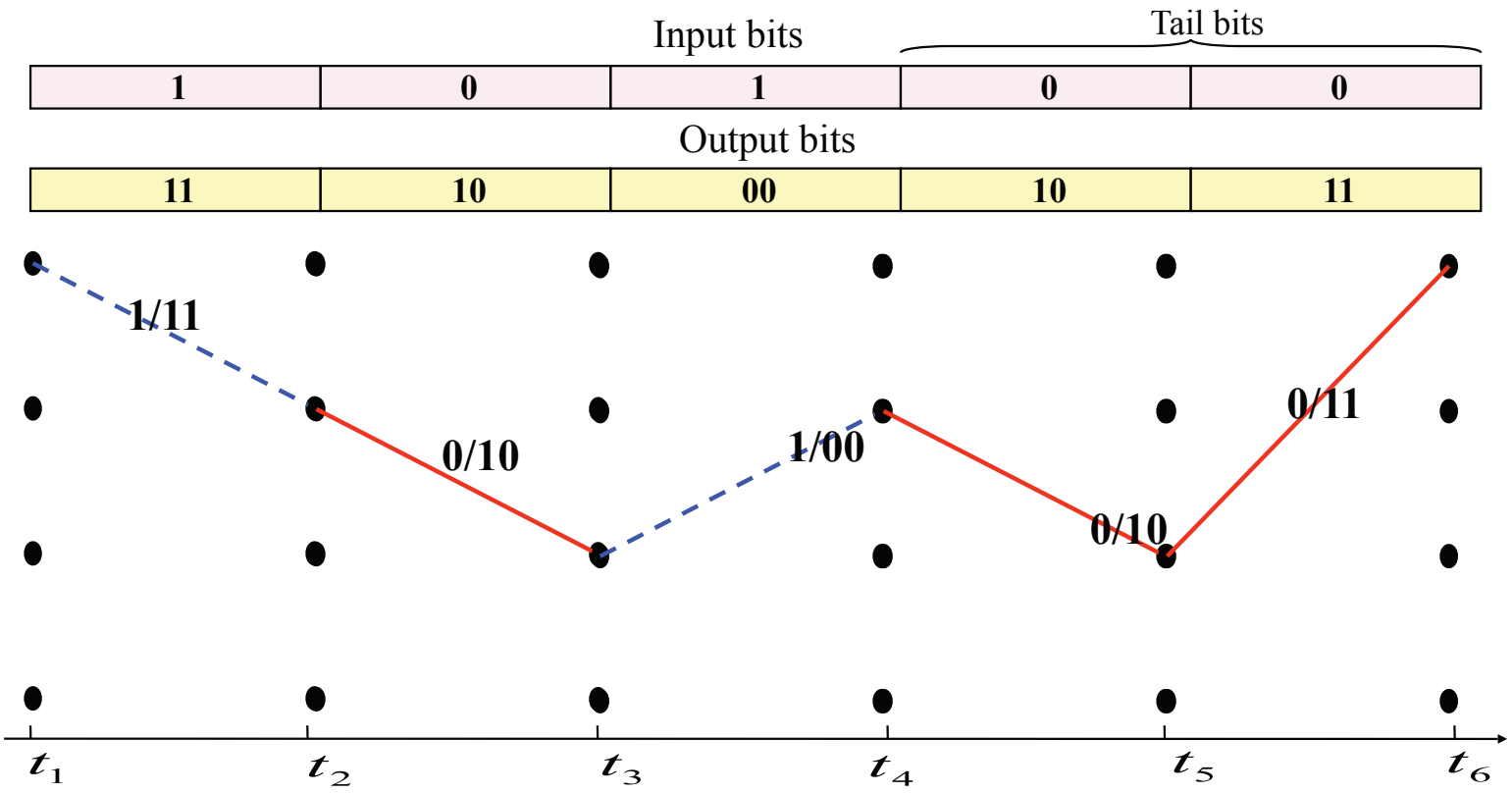
Input bits
Tail bits
1
0
1
0
0
Output bits
11
10
00
10
11
1/11
0/10
1/00
0/10
0/11
t_1
t_2
t_3
t_4
t_5
t_6

Optimum decoding

Maximum likelihood decoder

- is optimum if all the input sequence messages are equally likely
- minimizes the probability of error
- selects a codeword among all the possible codewords which ...
- ... maximizes the likelihood function

$$p(\mathbf{Z}|\mathbf{U}^{(m')})$$

  - $\mathbf{Z}$ is the received sequence
  - $\mathbf{U}^{(m')}$ is one of the possible codewords

ML-Decoding Rule

Choose $\mathbf{U}^{(m')}$ if $p(\mathbf{Z}|\mathbf{U}^{(m')}) = \max_{\text{over all } \mathbf{U}^{(m')}} p(\mathbf{Z}|\mathbf{U}^{(m)})$

NOTE! There are 2^L codewords.

Soft and Hard Decisions I

- In hard decision:
  - The demodulator makes a firm or hard decision
  - Its output is only zero or one ("hard-bits")
  - Provides no information on how reliable the decision is.
- Decoding based on hard-bits is called the "hard-decision decoding".

Soft and Hard Decisions II

- In Soft decision:
  - Demodulator provides the decoder with some side information.
  - The side information is a measure of confidence for the decision.
  - The demodulator outputs are called "soft-bits".
  - Soft-bits are quantized to more than two levels.
- Decoding based on soft-bits, is called the "soft-decision decoding".

On AWGN channels 2 dB gain is obtained by using soft-decoding over hard-decoding.

The Viterbi Algorithm - by example (i)

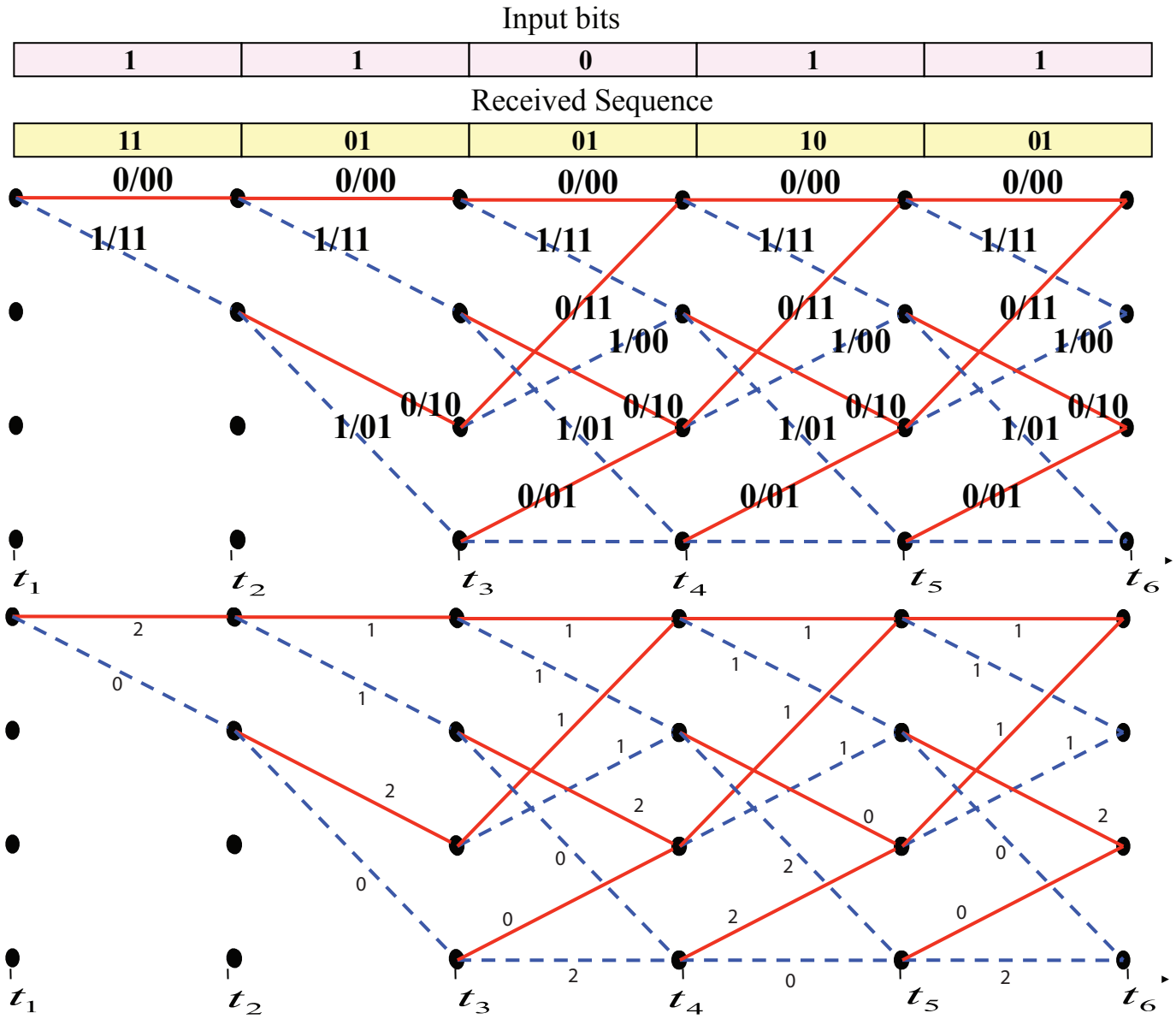

The Viterbi Algorithm - by example (ii)

Input bits

1	1	0	1	1

Received Sequence

11	01	01	10	01

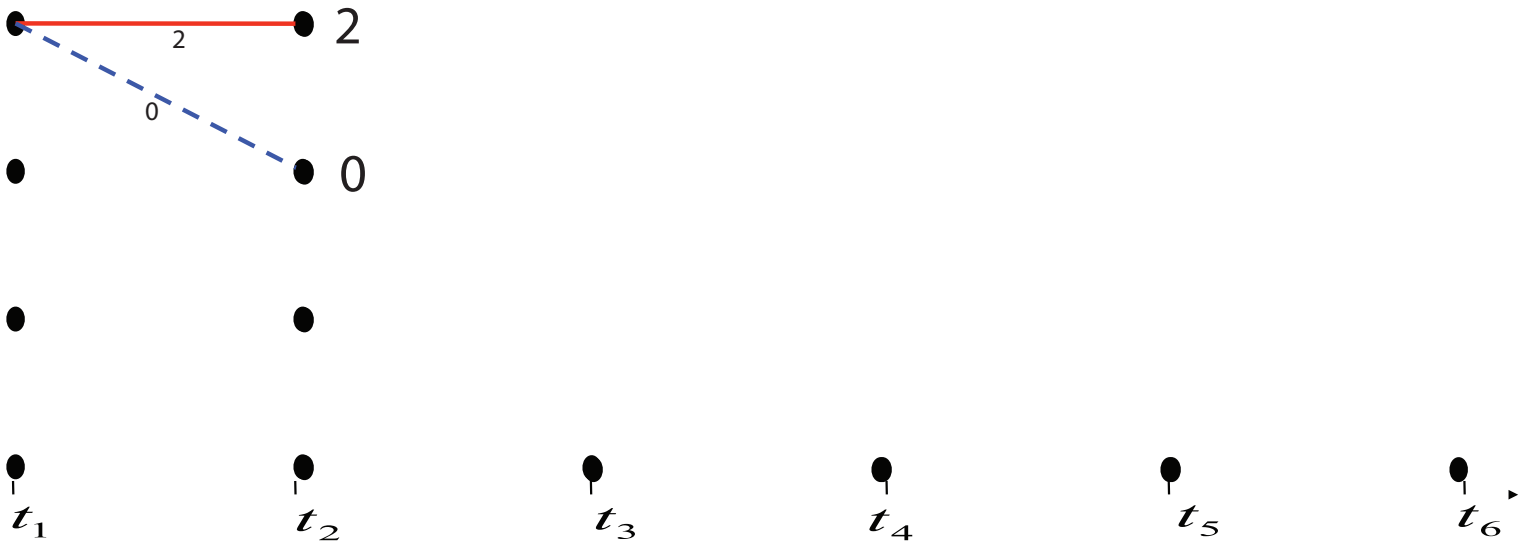

The Viterbi Algorithm - by example (iii)

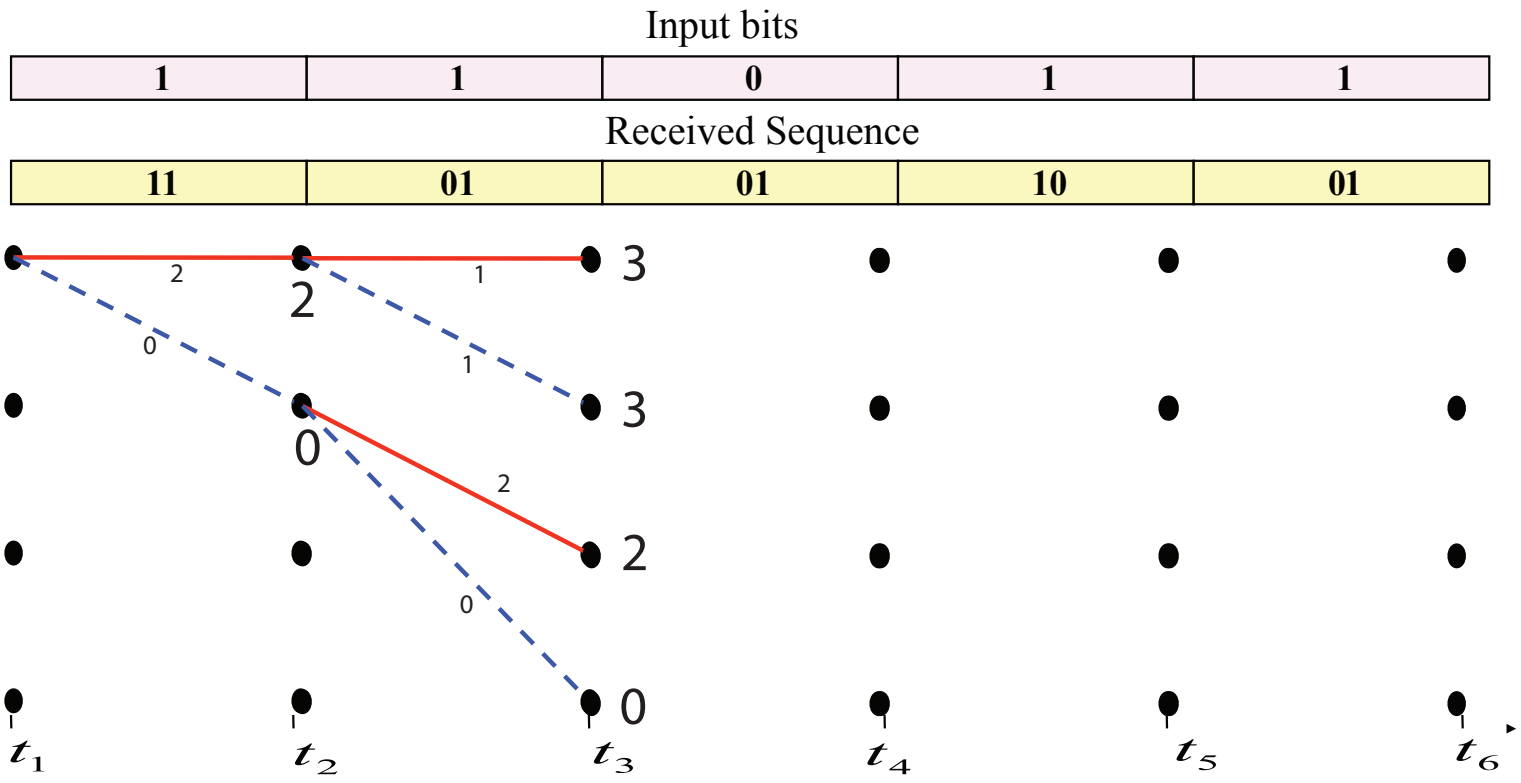

The Viterbi Algorithm - by example (iv)

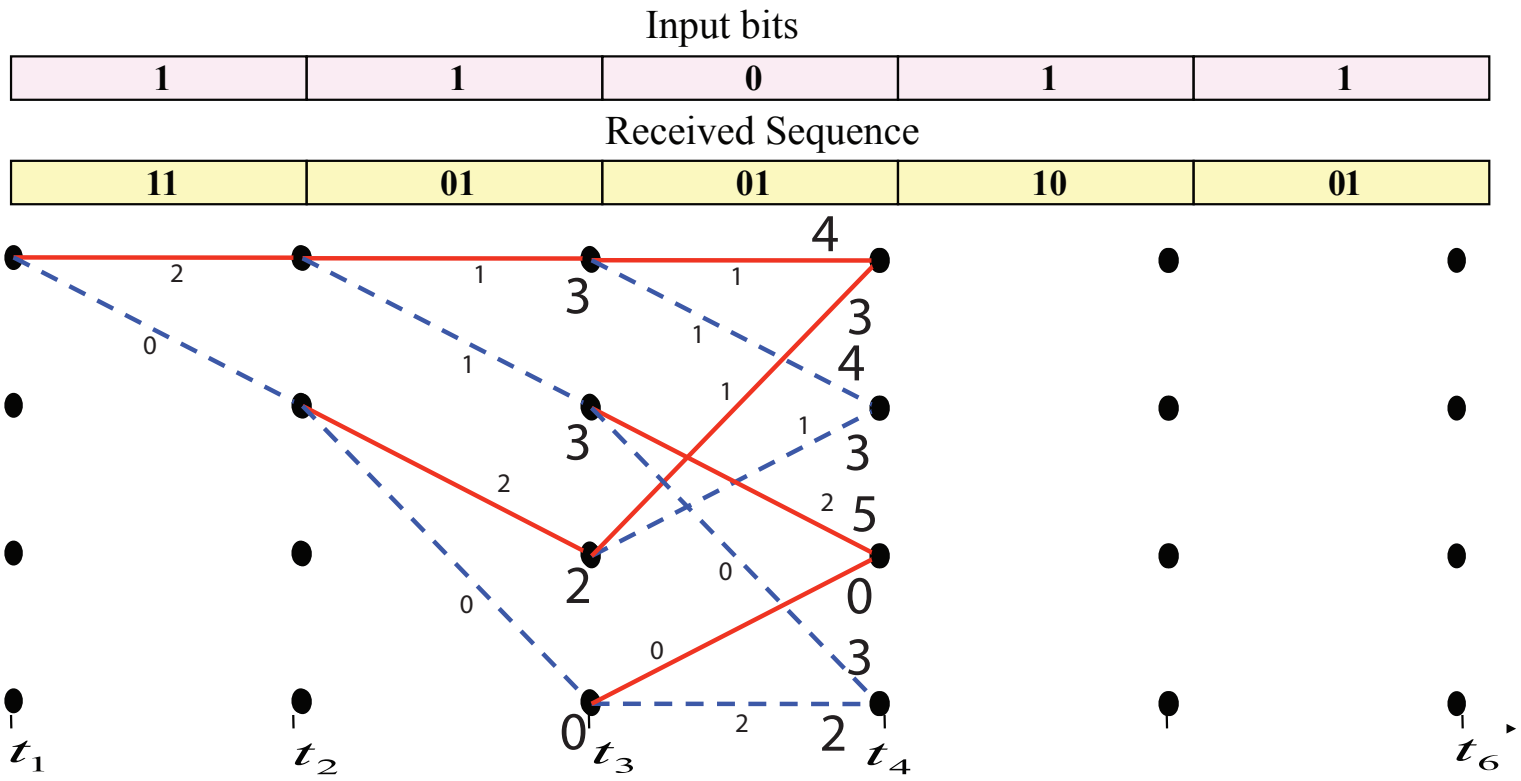

The Viterbi Algorithm - by example (v)

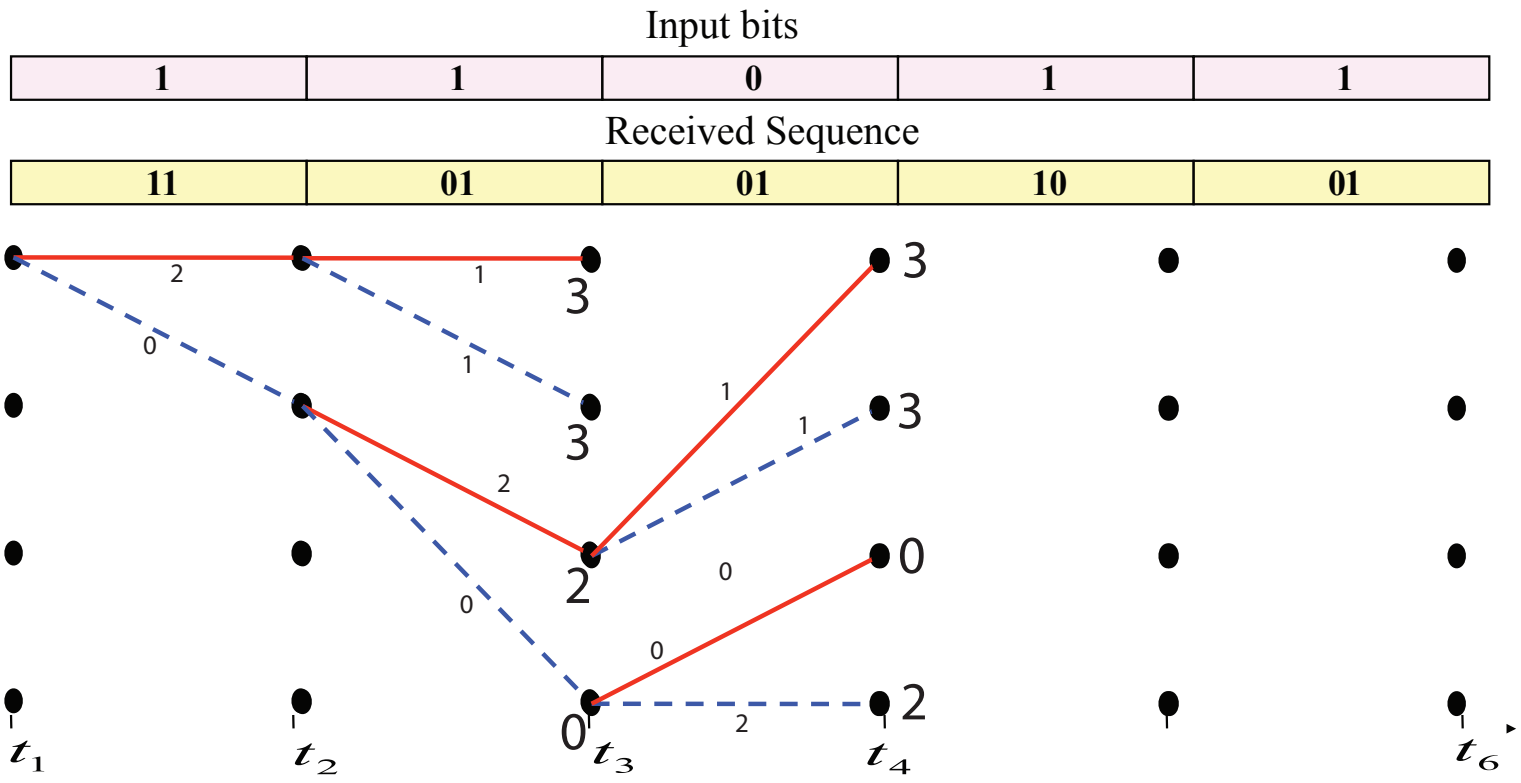

The Viterbi Algorithm - by example (vi)

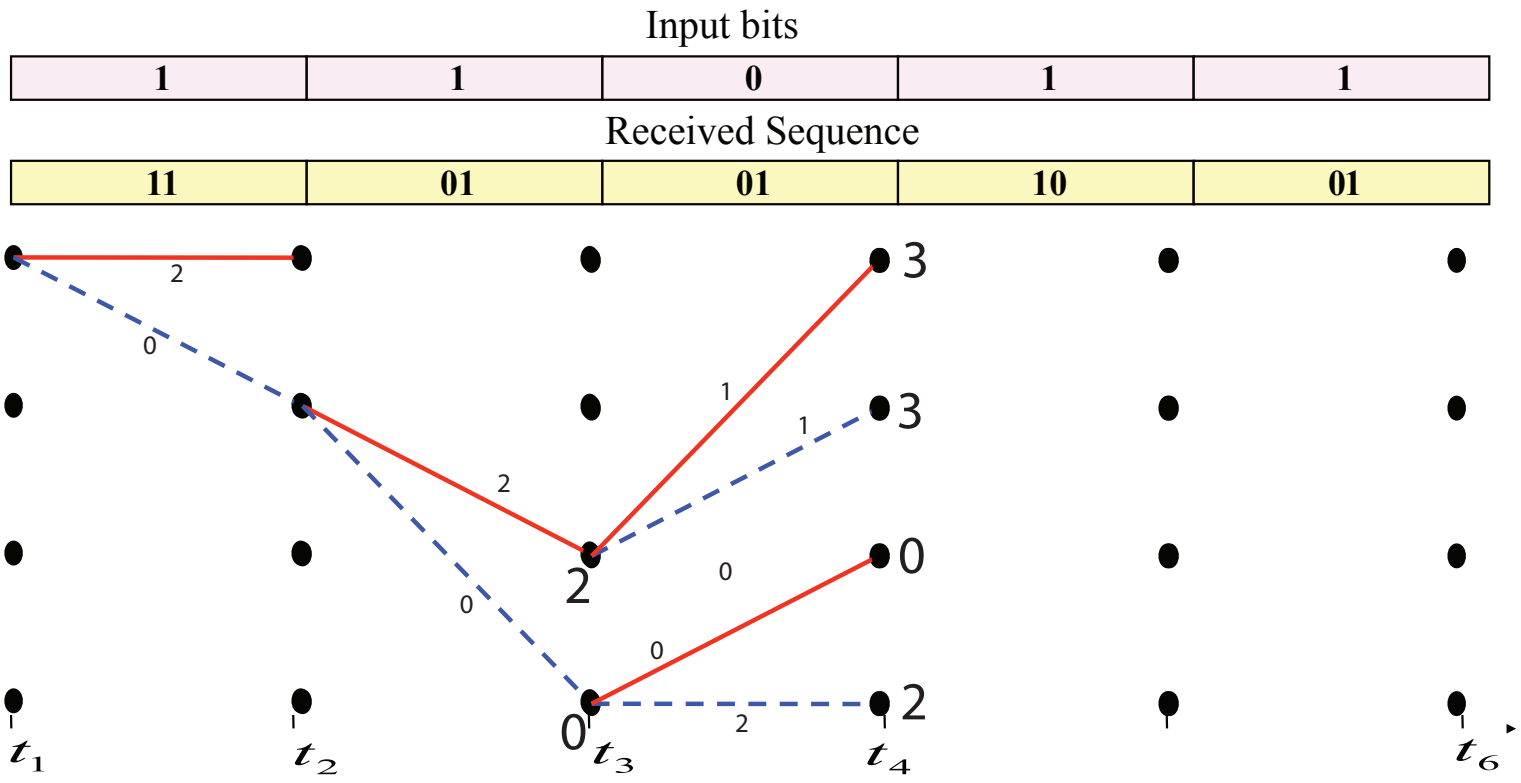

The Viterbi Algorithm - by example (vii)

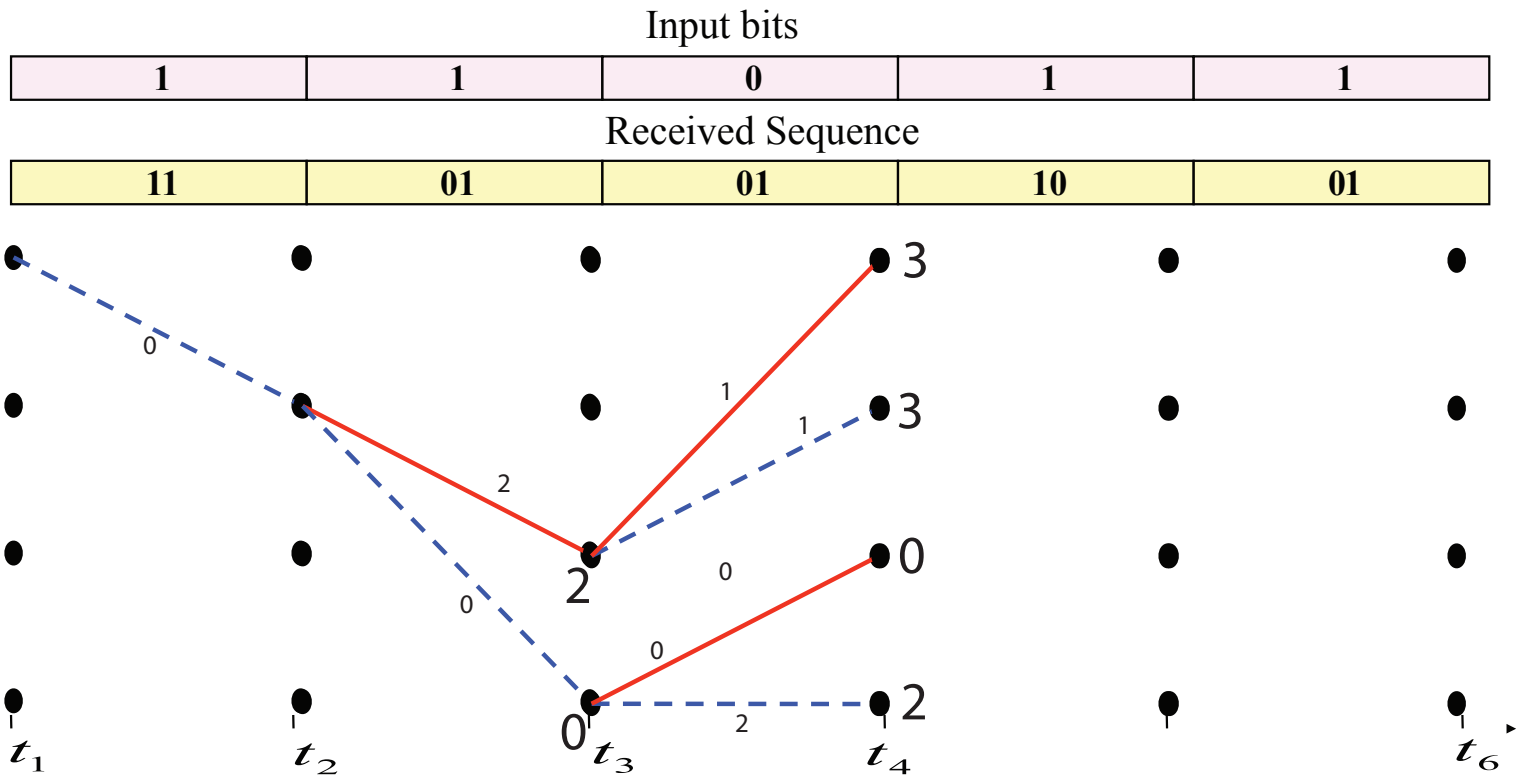

The Viterbi Algorithm - by example (viii)

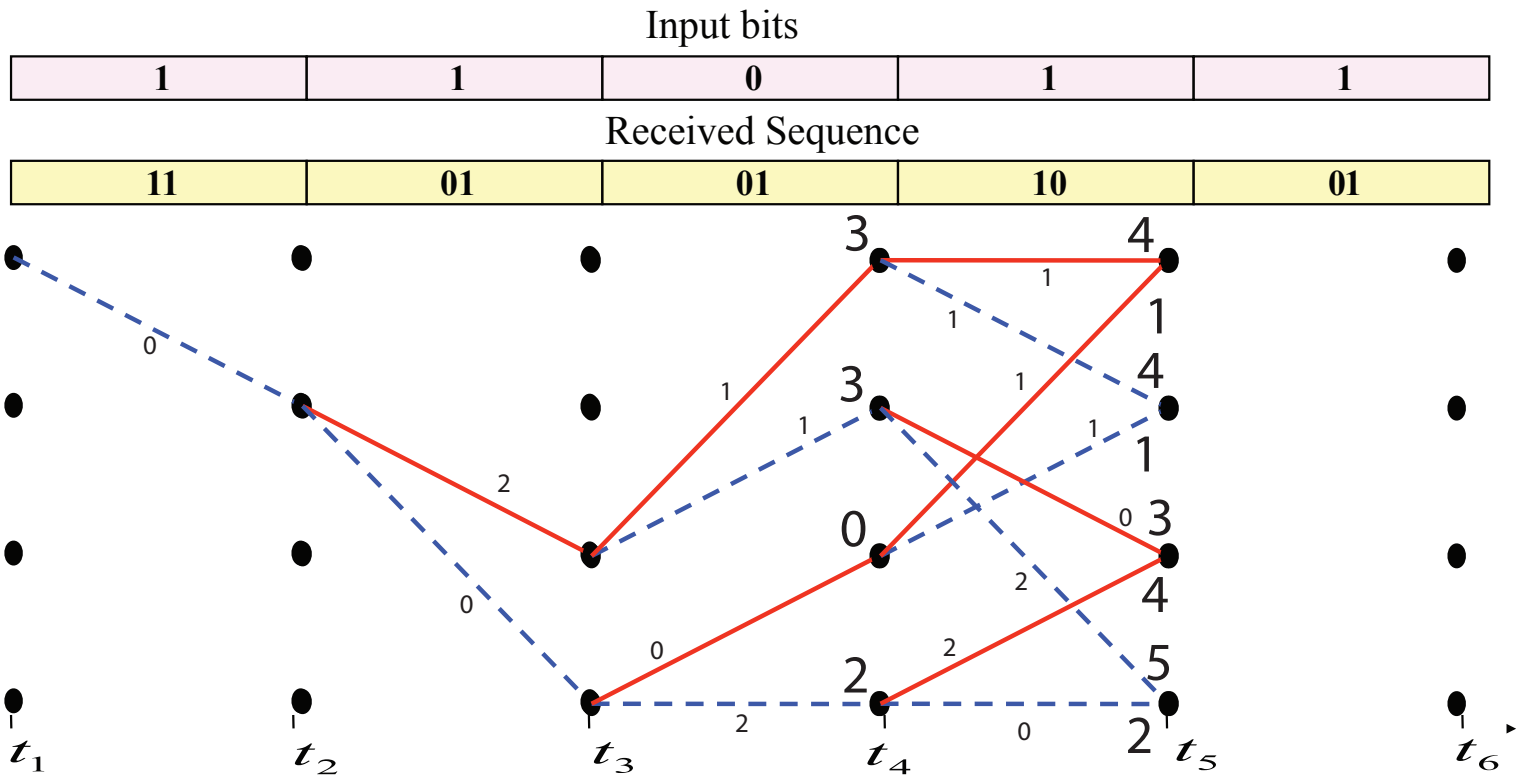

The Viterbi Algorithm - by example (ix)

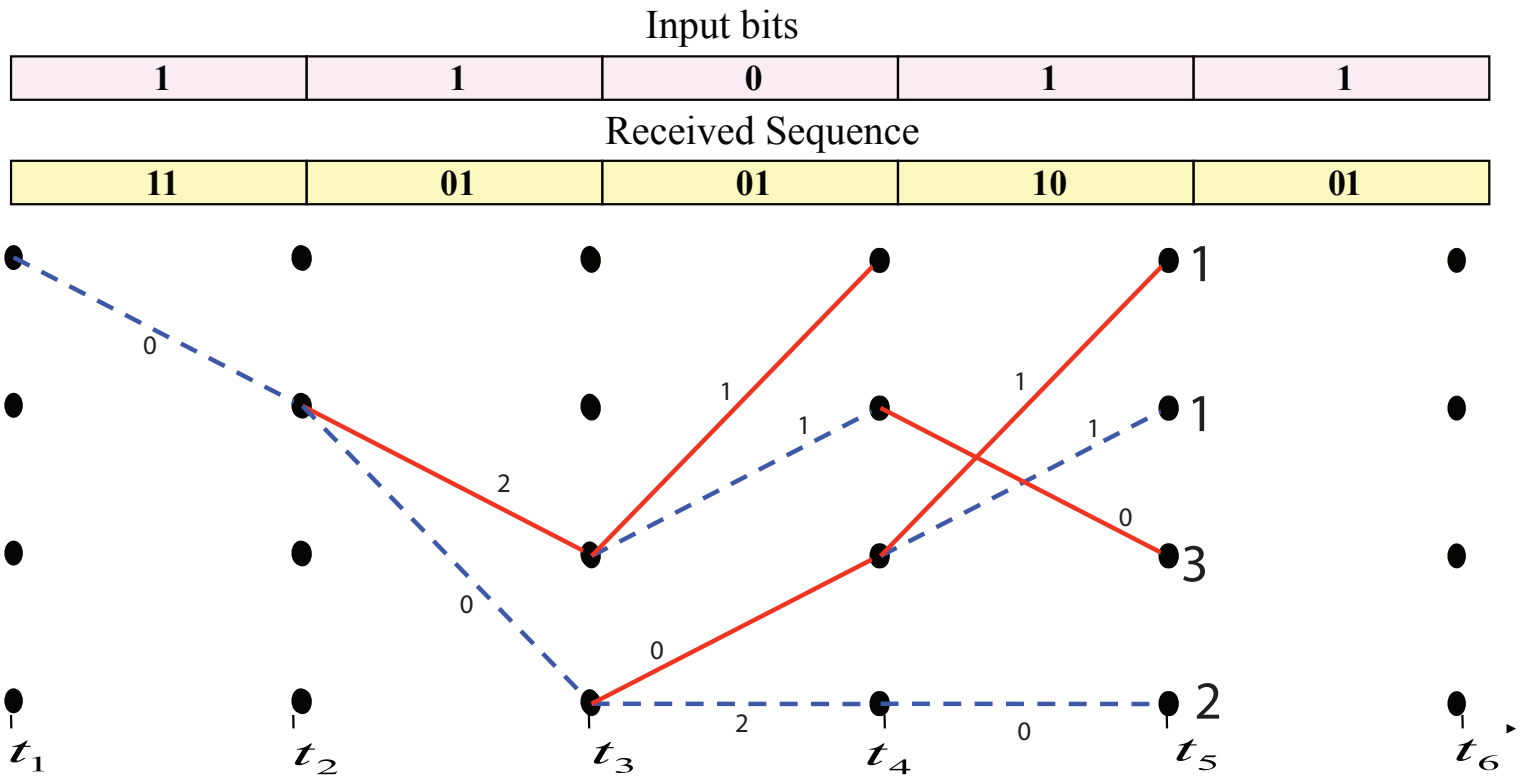

The Viterbi Algorithm - by example (x)

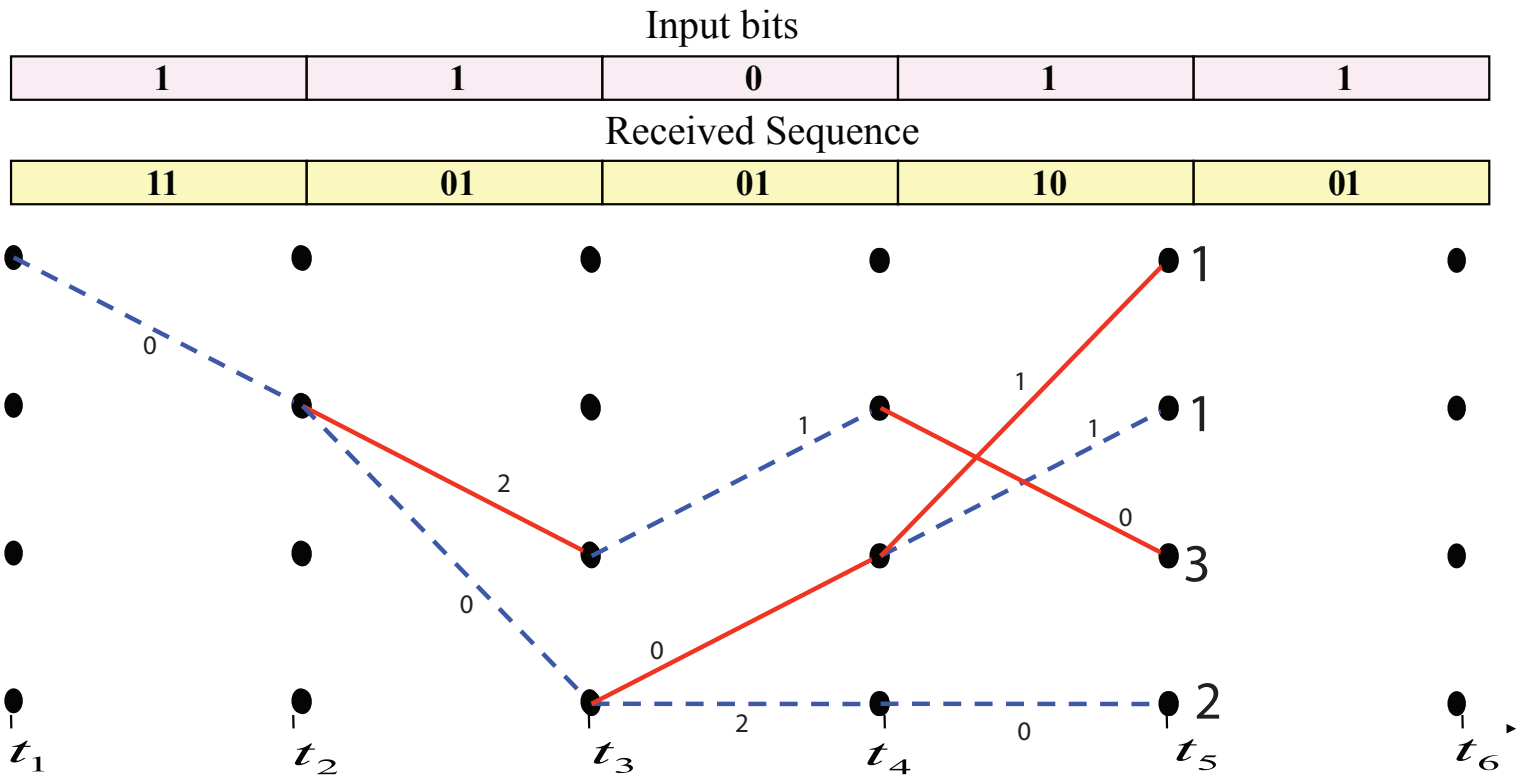

The Viterbi Algorithm - by example (xi)

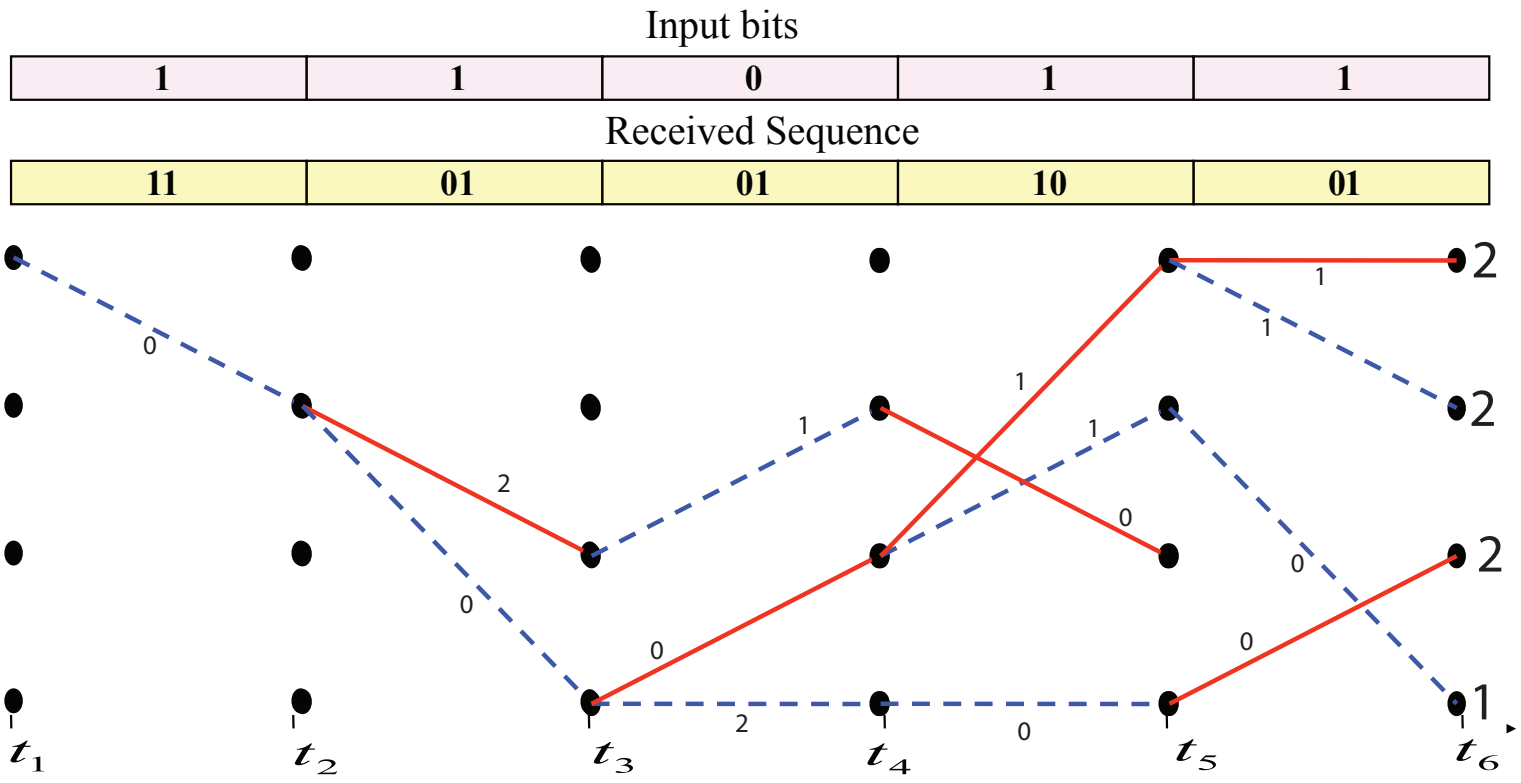

The Viterbi Algorithm - by example (xii)

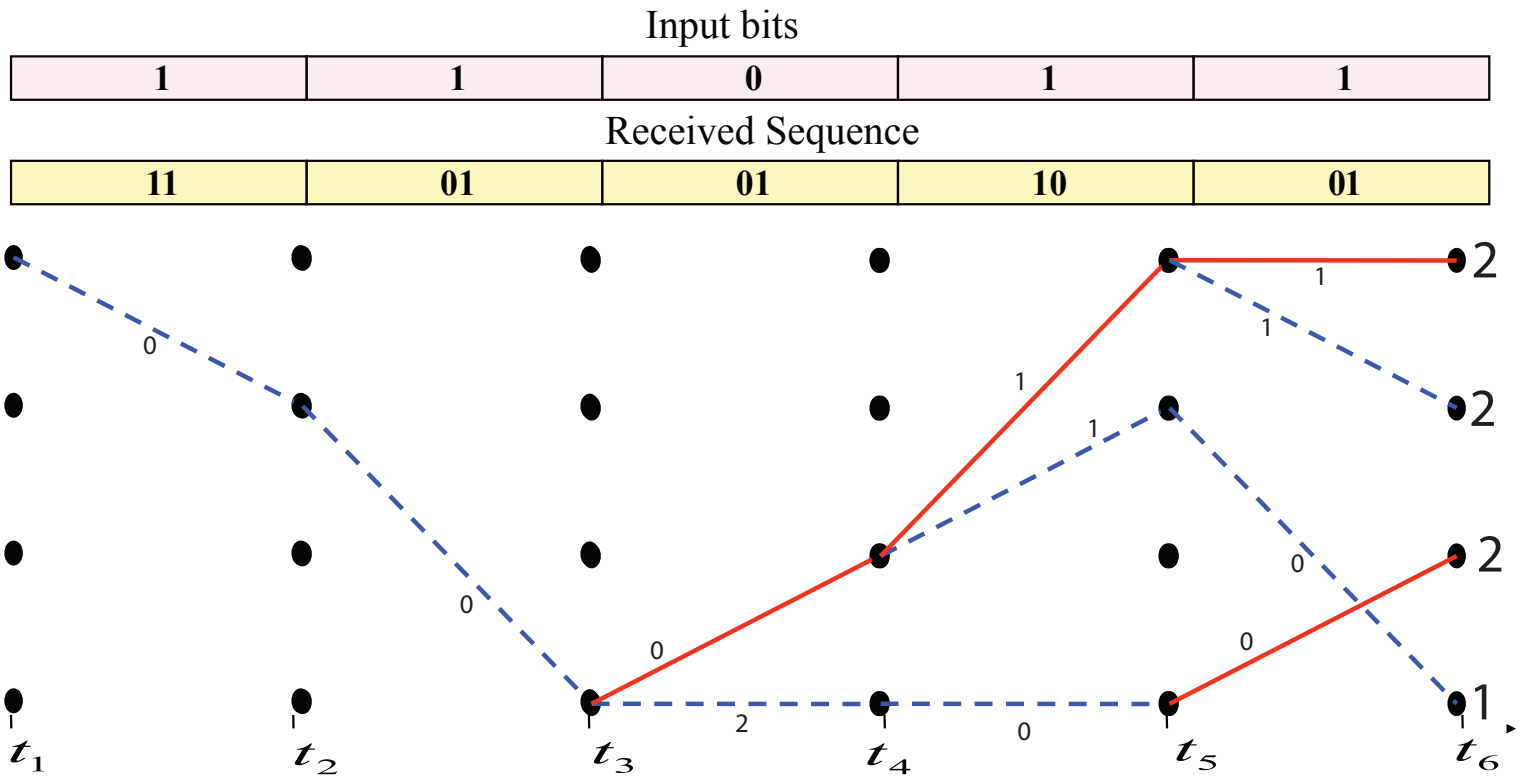

The Viterbi Algorithm - by example (xiii)

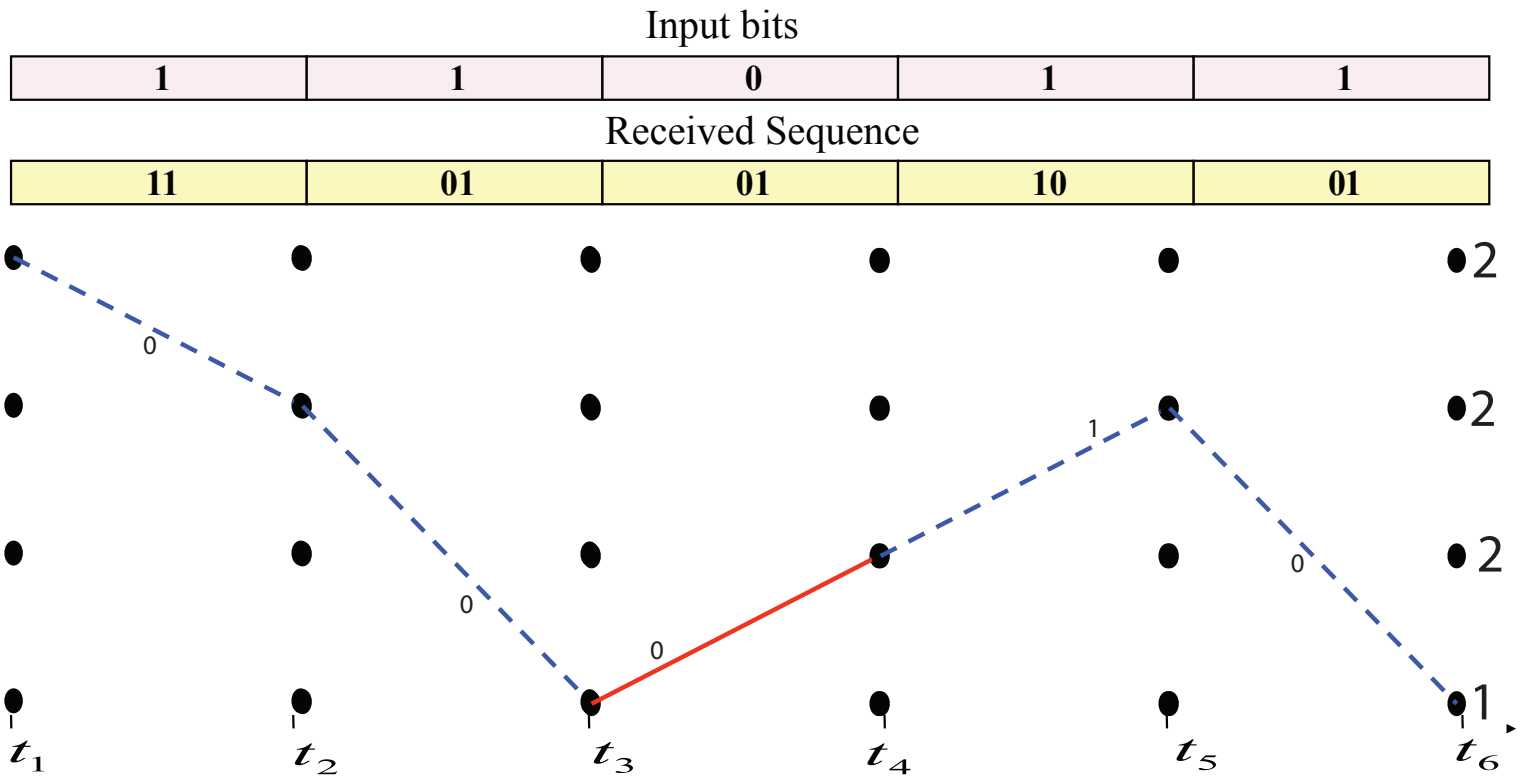
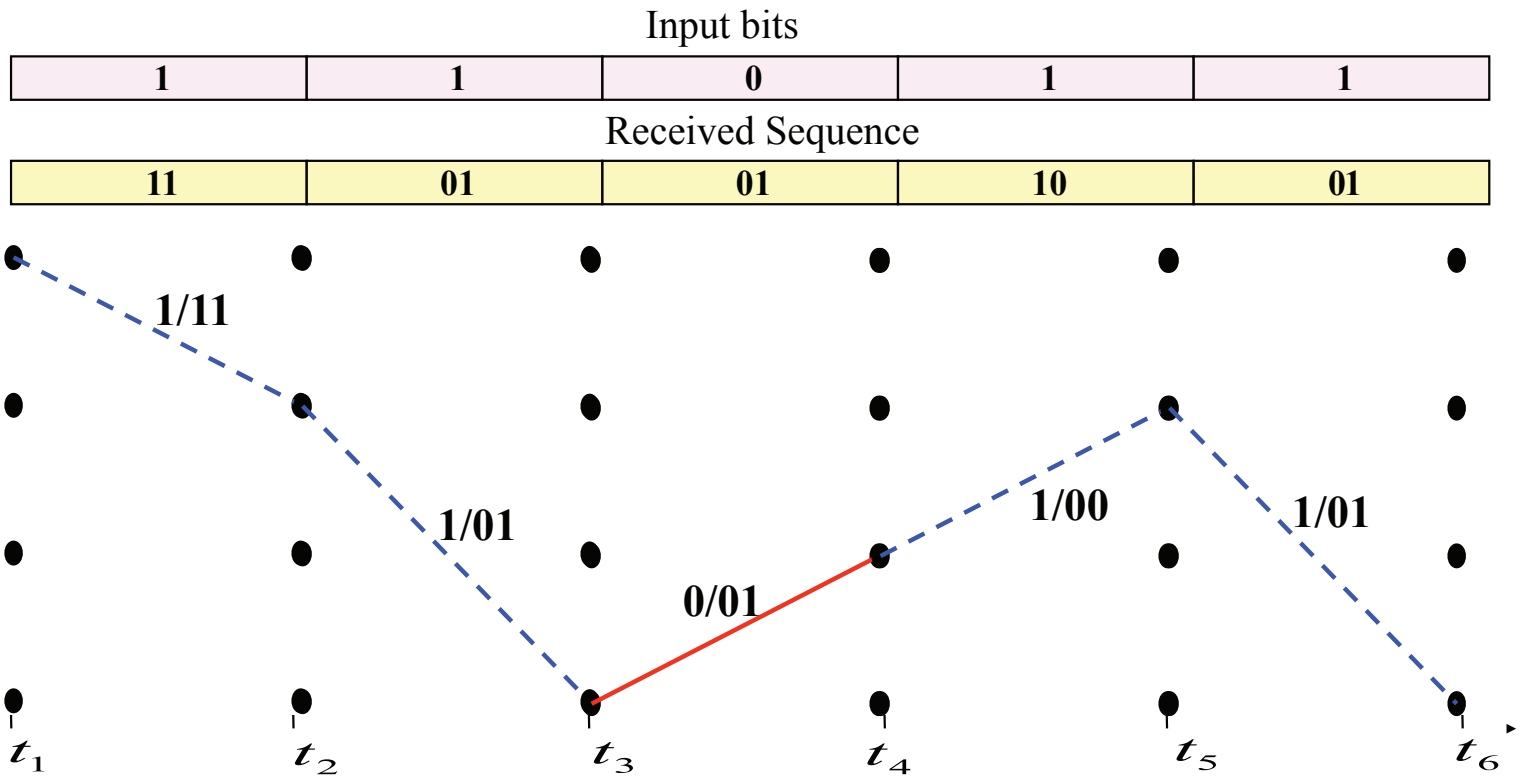
The Viterbi Algorithm - by example (xiv)