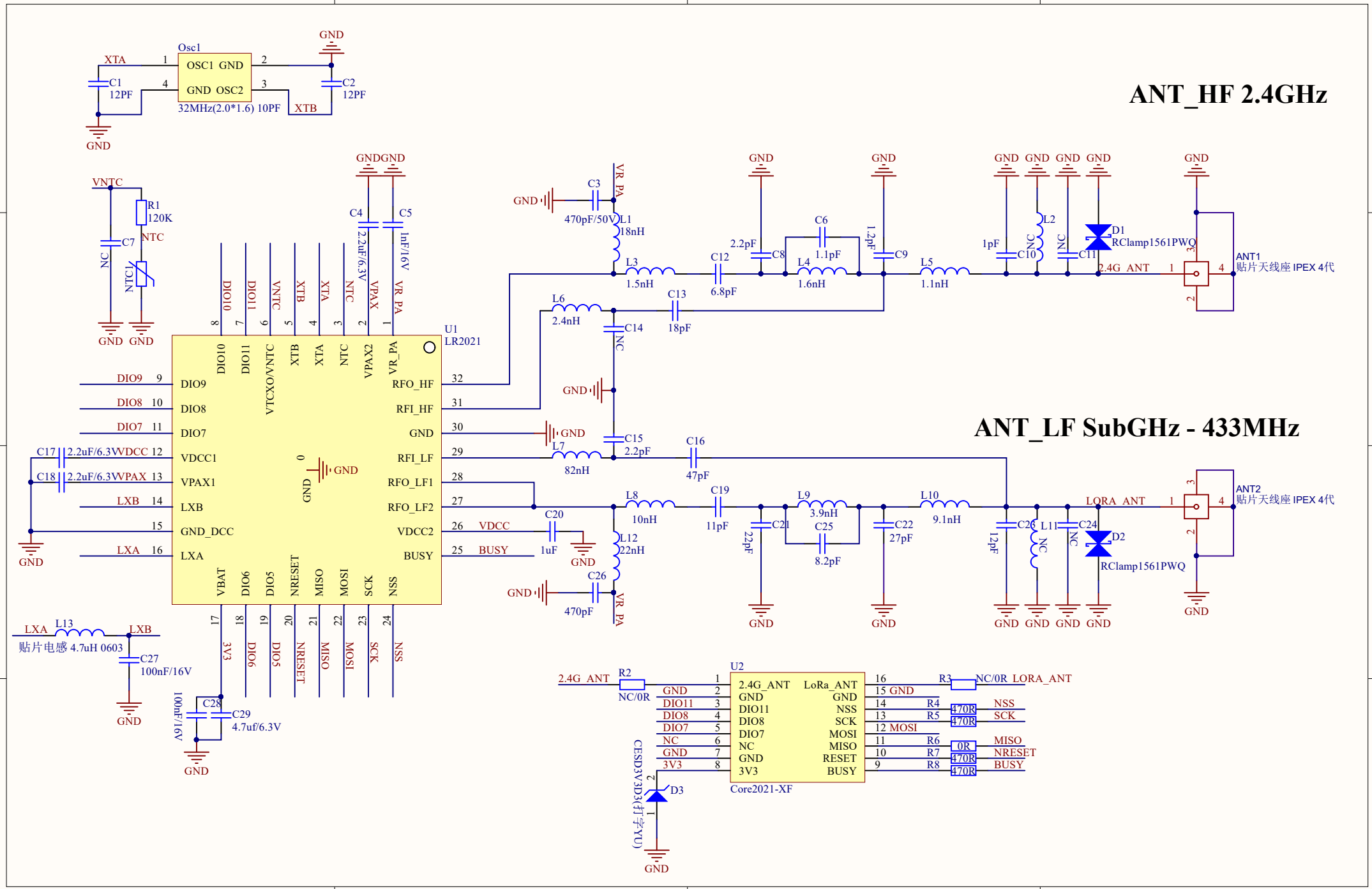
ANT_HF 2.4GHz
ANT_LF SubGHz - 433MHz
Osc1
OSC1 GND
GND OSC2
32MHz(2.0*1.6) 10PF
XTA
XTB
C1 12PF
C2 12PF
VNTC
R1 120K
NTC
C7 NC
C4 2.2uF/6.3V
C5 1nF/16V
U1 LR2021
DIO9
DIO8
DIO7
VDCC1
VPAX1
LXB
GND_DCC
LXA
RFO_HF
RFI_HF
RFI_LF
RFO_LF1
RFO_LF2
VDCC2
BUSY
VBAT
DIO6
DIO5
NRESET
MISO
MOSI
SCK
NSS
3V3
VTCXO/VNTC
VPAX2
VR_PA
C17 2.2uF/6.3V
C18 2.2uF/6.3V
L13
贴片电感 4.7uH 0603
C27 100nF/16V
C28 100nF/16V
C29 4.7uf/6.3V
C3 470pF/50V
L1 18nH
L3 1.5nH
C12 6.8pF
C8 2.2pF
C6 1.1pF
L4 1.6nH
C9 1.2pF
L5 1.1nH
C10 1pF
L2 NC
C11 NC
D1 RClamp1561PWQ
2.4G_ANT
ANT1 贴片天线座 IPEX 4代
L6 2.4nH
C13 18pF
C14 NC
C15 2.2pF
L7 82nH
C16 47pF
L8 10nH
C19 11pF
C21 22pF
L9 3.9nH
C25 8.2pF
C22 27pF
L10 9.1nH
C20 1uF
L12 22nH
C26 470pF
C23 12pF
L11 NC
C24 NC
D2 RClamp1561PWQ
LORA_ANT
ANT2 贴片天线座 IPEX 4代
U2
Core2021-XF
2.4G_ANT
LoRa_ANT
R2 NC/0R
R3 NC/0R
R4 470R
R5 470R
R6 0R
R7 470R
R8 470R
NSS
SCK
MISO
NRESET
BUSY
MOSI
D3 CESD3V3D3(打字YU)

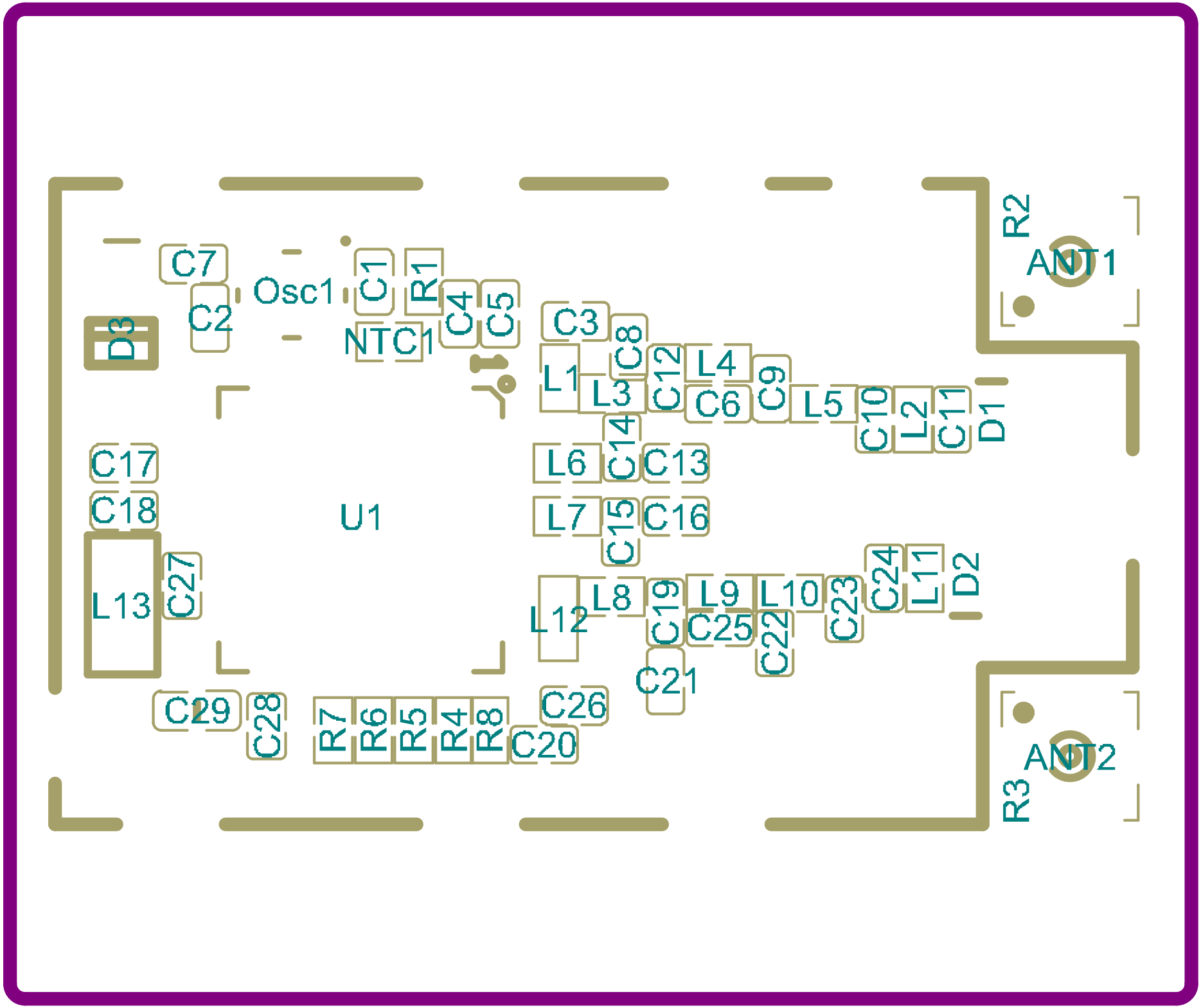
C7
C2
Osc1
C1
R1
C4
C5
NTC1
D3
C3
C8
L1
L3
C12
L4
C6
C9
L5
C10
L2
C11
D1
R2
ANT1
C14
L6
C13
C17
C18
U1
L7
C15
C16
L13
C27
L12
L8
C19
L9
L10
C23
C24
L11
D2
C25
C22
C21
C29
C28
R7
R6
R5
R4
R8
C26
C20
ANT2
R3