MCU

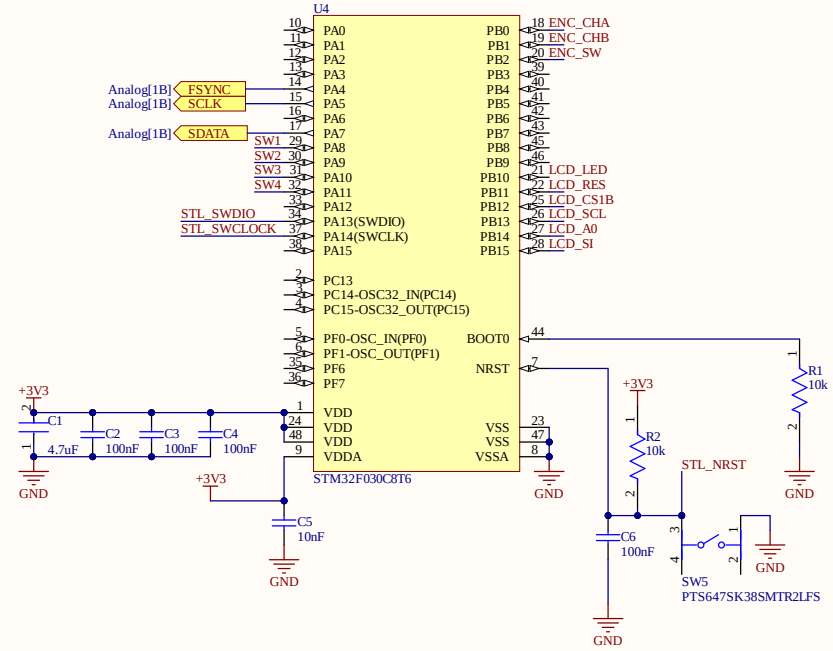

User Interface

Waveform Select

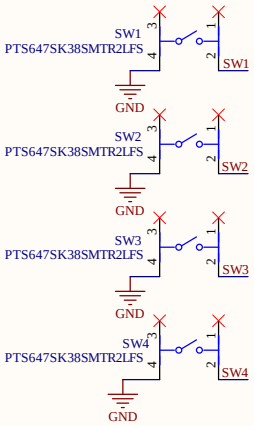

Rotary Encoder

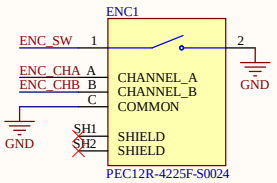

Connectors

STLINK

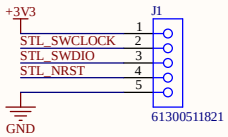

LCD

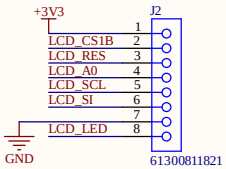

Title		
Size: B	Number	Revision
Date: 1/08/2026		Sheet of
File: C:\Users\..\Digital.SchDoc		Drawn By:

Output Terminals

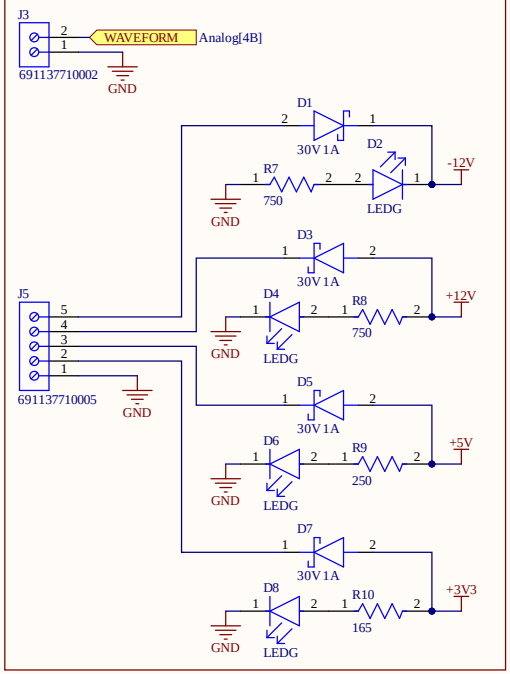

USBC PD

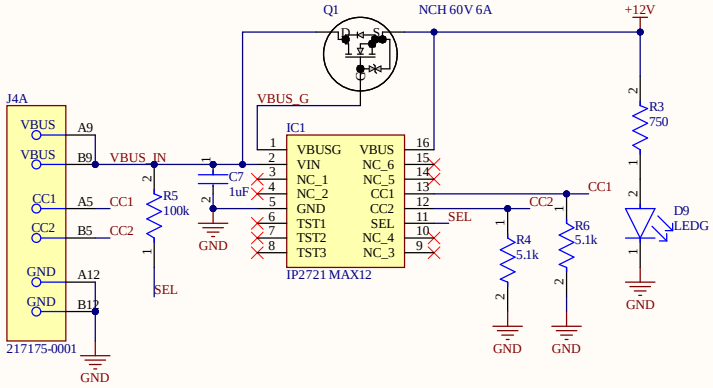

LDO 12V to 5V

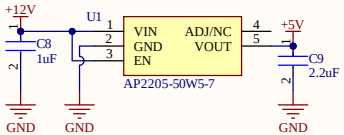

LDO 5V to 3V5

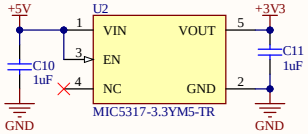

Charge Pump 15V to -15V

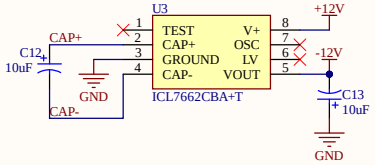

Title			
Size: B	Number		Revision
Date: 1/08/2026		Sheet of	
File: C:\Users\..\Power.SchDoc		Drawn By:	

Waveform Generator

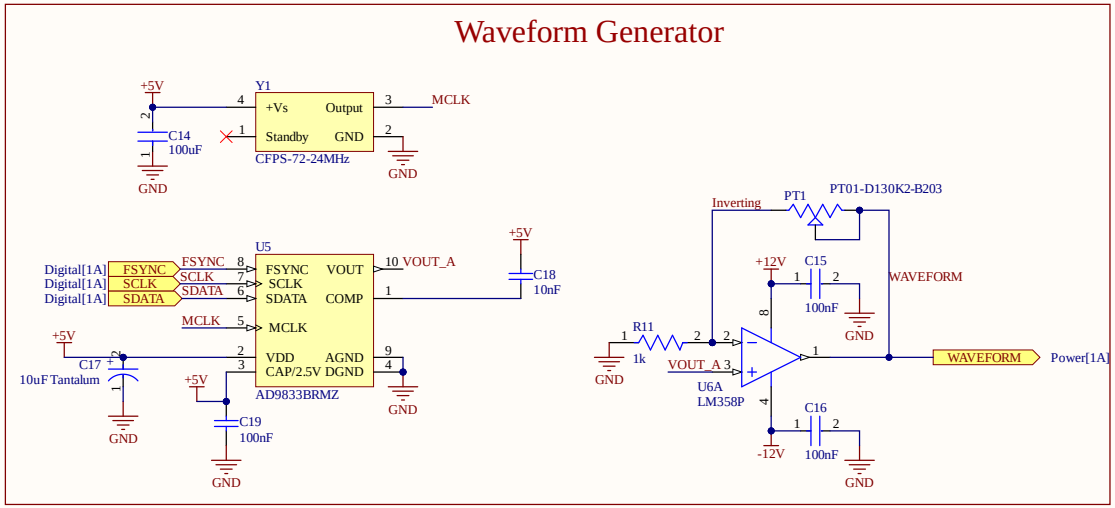

Title		
Size: B	Number	Revision
Date: 1/08/2026		Sheet of
File: C:\Users\..\Analog.SchDoc		Drawn By:

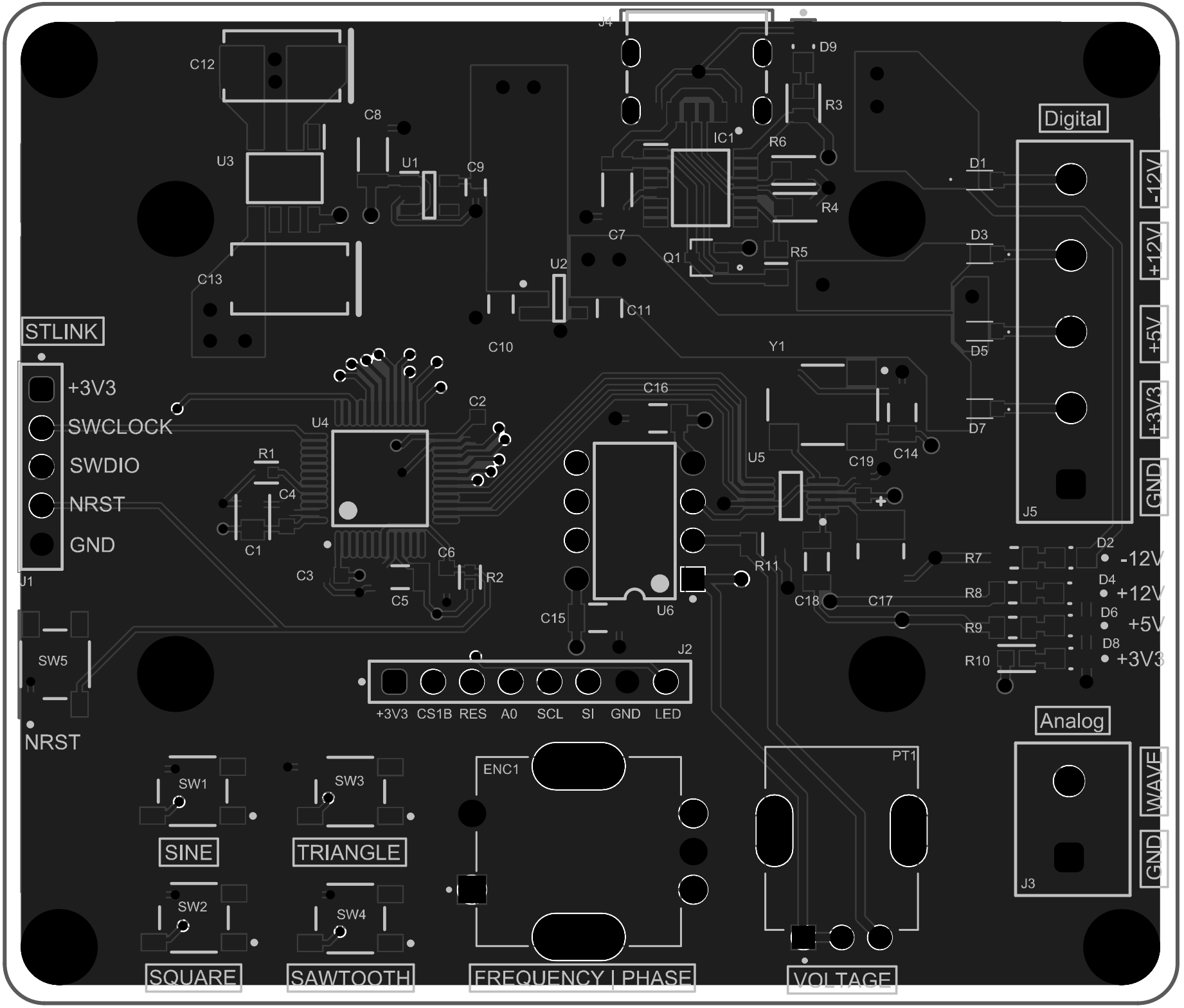

STLINK
+3V3
SWCLOCK
SWDIO
NRST
GND
J1
SW5
NRST
Digital
-12V
+12V
+5V
+3V3
GND
J5
Analog
WAVE
GND
J3
J4
D9
R3
IC1
R6
R4
R5
Q1
C7
U2
C11
C10
C12
C8
U3
U1
C9
C13
Y1
C16
C2
U4
R1
C4
C1
C3
C6
R2
C5
U5
C19
C14
U6
C15
R11
C18
C17
R7
R8
R9
R10
D1
D3
D5
D7
D2
D4
D6
D8
J2
+3V3
CS1B
RES
A0
SCL
SI
GND
LED
SW1
SW3
SW2
SW4
SINE
TRIANGLE
SQUARE
SAWTOOTH
ENC1
FREQUENCY | PHASE
PT1
VOLTAGE