Project : MT6769T LPDDR4x Internal
REF_SCH TOP LEVEL

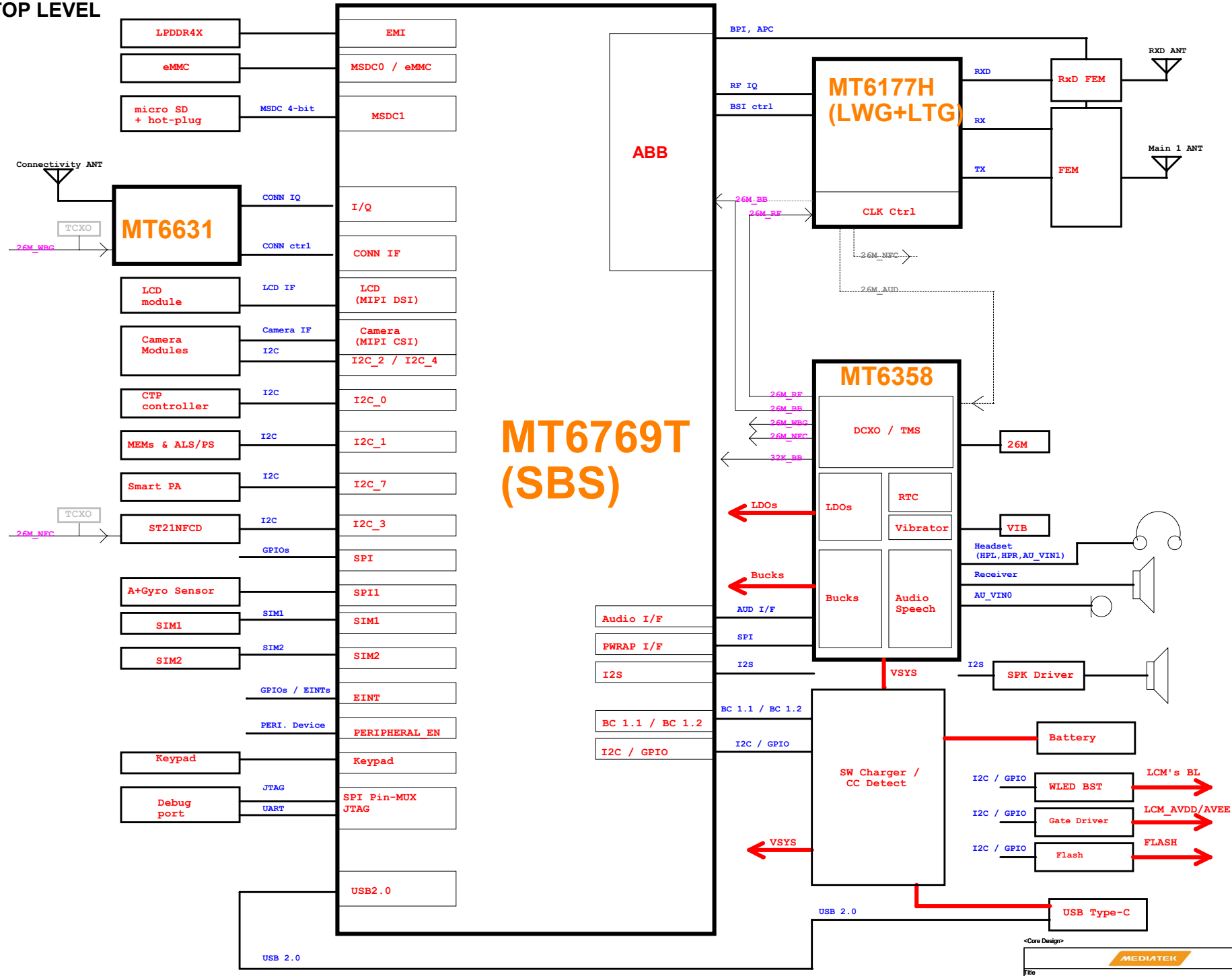

<Core Design>
MEDIATEK
Title
Size C
MTK Confidential
Date: Friday, July 23, 2021 Sheet 1 of 32

Schematic design notice of "10_BB_ POWER_PDN" page:

Note 10-1: Differential pair of DVDD_GPU remote sense must be close to BB's ball.
Remote sense trace with GND shielding to PMIC (Differential)

Note 10-2: Differential pair of DVDD_PROC remote sense must be close to BB's ball
Remote sense trace with GND shielding to PMIC (Differential)

Note 10-3: Differential pair of DVDD_MODEM remote sense must be close to BB's ball.
Remote sense trace with GND shielding to PMIC (Differential)

Note 10-4: Differential pair of DVDD_CORE remote sense must be close to BB's ball.
Remote sense trace with GND shielding to PMIC (Differential)

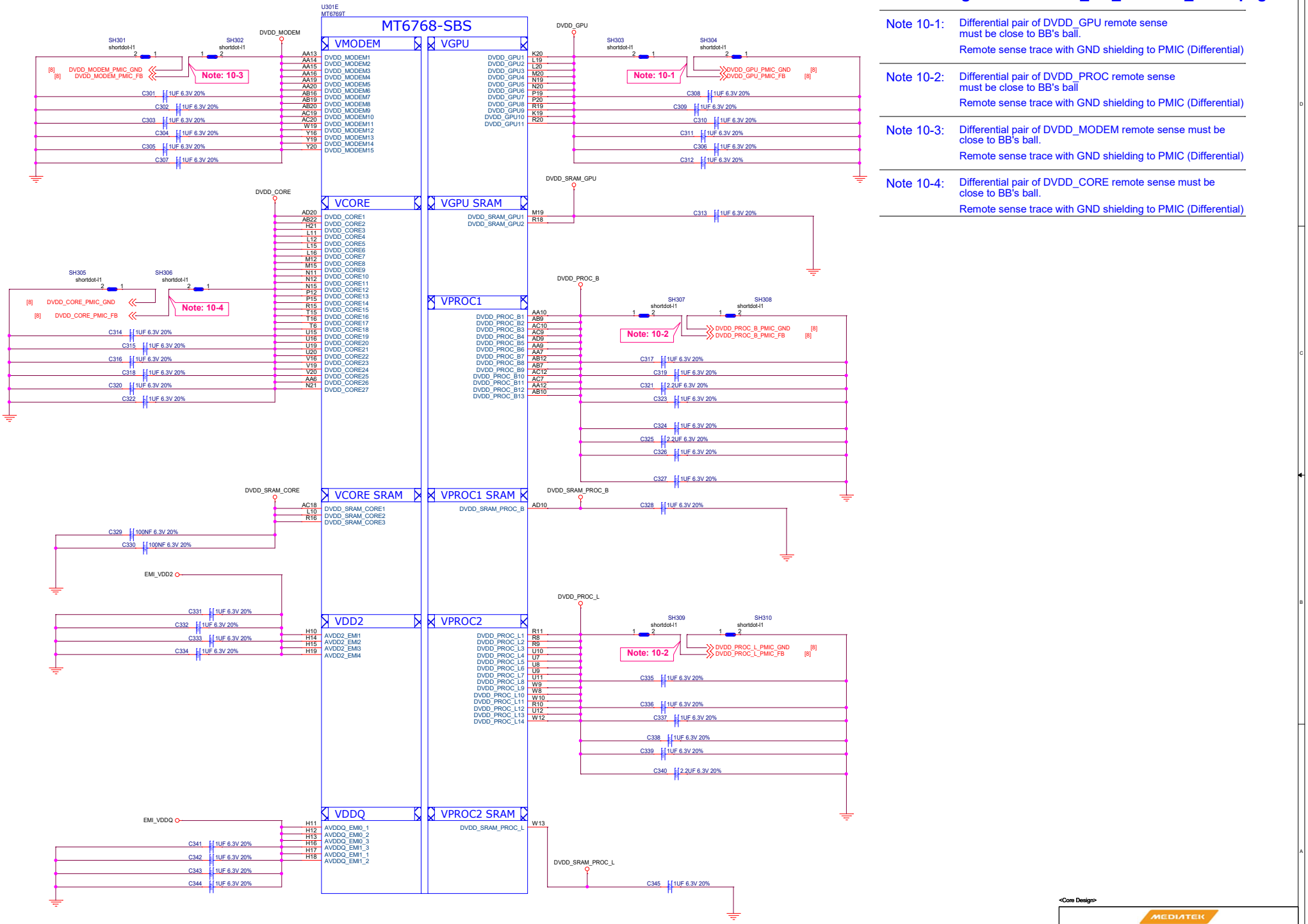

<Core Design>

MEDIATEK

Title: 10_BB_ POWER_PDN

Size: C

MTK Confidential

Date: Friday, July 23, 2021 Sheet 3 of 32

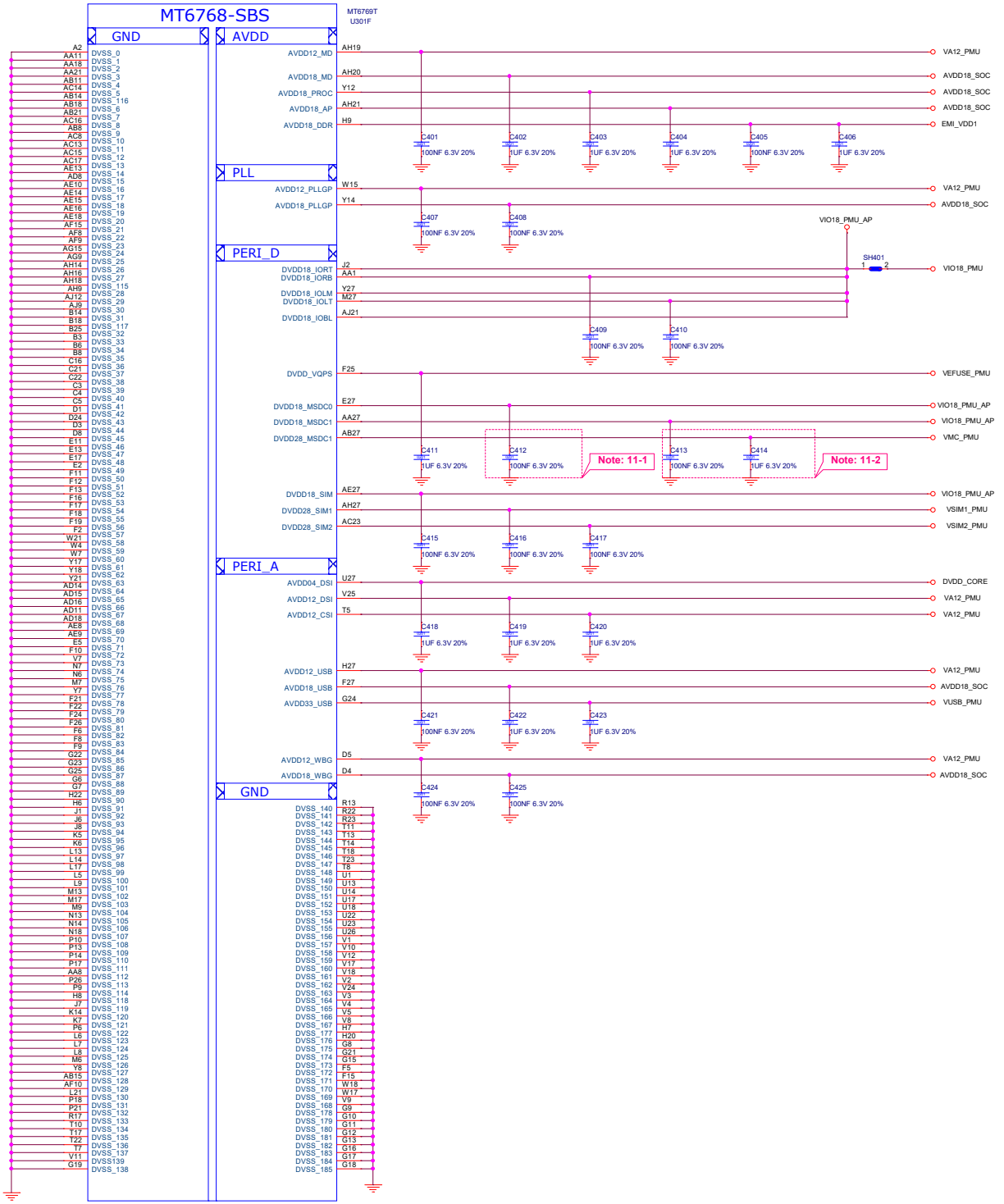

Schematic design notice of "11_BB_POWER_IO" page:

Note 11-1: C412 closed DVDD18_MSDC0 150mil

Note 11-2: C413 closed DVDD18_MSDC1 150mil
C414 closed DVDD28_MSDC1 150mil

<Core Design>

MEDIATEK

Title

Size Custom

MTK Confidential

Date: Friday, July 23, 2021 Sheet 4 of 32

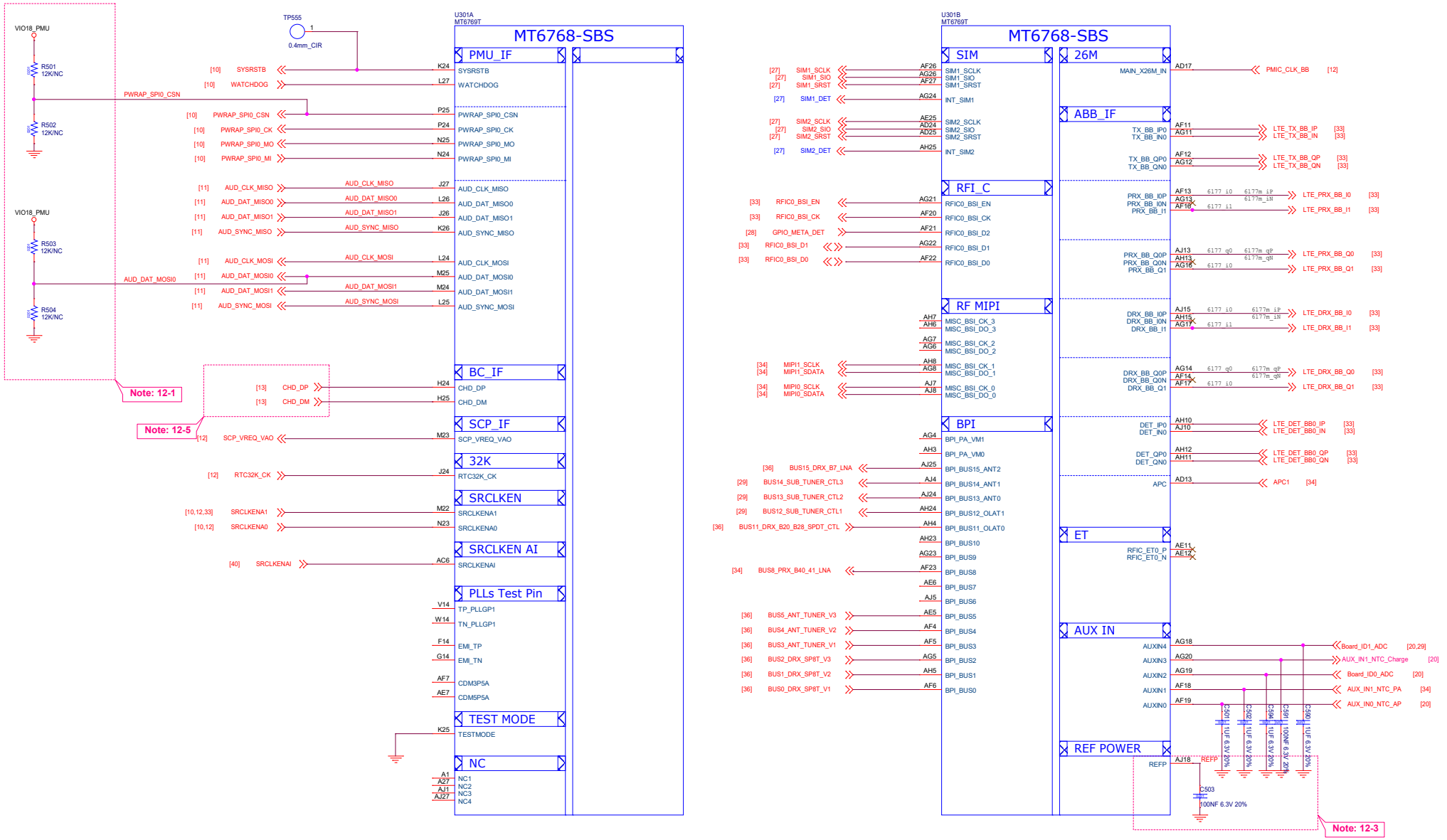

Schematic design notice of "12_BB_1" page:

Note 12-1: PWRAP_SPI0_CSN" and "AUD_DAT_MOSI0" are bootstrap pins to select which interface will be the JTAG pin out

PWRAP_SPI0_CSN	AUD_DAT_MOSI0	JTAG Function	
default=PU	default=PD	AP_JTAG	MD_JTAG
HI	LO	N/A	N/A
HI	HI (by ext. PU)	SPI0 + EINT8	SPI2 + SPI3
LO (by ext. PD)	LO	SPI0 + EINT8	N/A
LO (by ext. PD)	HI (by ext. PU)	N/A	N/A

Note 12-2: To shunt a 1uF capacitor in the AUXIN ADC input to prevent noise coupling. It should be placed as close to BB as possible. Connect the unused AUX ADC input to GND.

Note 12-3: The de-coupling cap. for REFP (AJ18 ball) have to be placed as close to BB as possible.

Note 12-4: HW pin for DDR type feature in bootstrap (refer to BB HW design Notice)

AUD_SYNC_MISO	AUD_CLK_MISO	CAM_PDN3	PMIC 6358 voltage	DDR Type
default=PD	default=PD	default=PD	VDRAM1 / VDRAM2	DDR
No ext. pull	No ext. pull	No ext. pull	1.125v / 0.6v	LP4X eMCP
No ext. pull	12K pull to VIO18	No ext. pull	OFF / 1.8v	Reserved
12K pull to VIO18	No ext. pull	No ext. pull	1.225v / OFF	LP3 eMCP
12K pull to VIO18	12K pull to VIO18	No ext. pull	1.125v / 1.8v	Reserved

Note 12-5:

Charger must have D+/D- pin for charger type USB detection.
Charger must have at least 500mA USB current for All charger type.

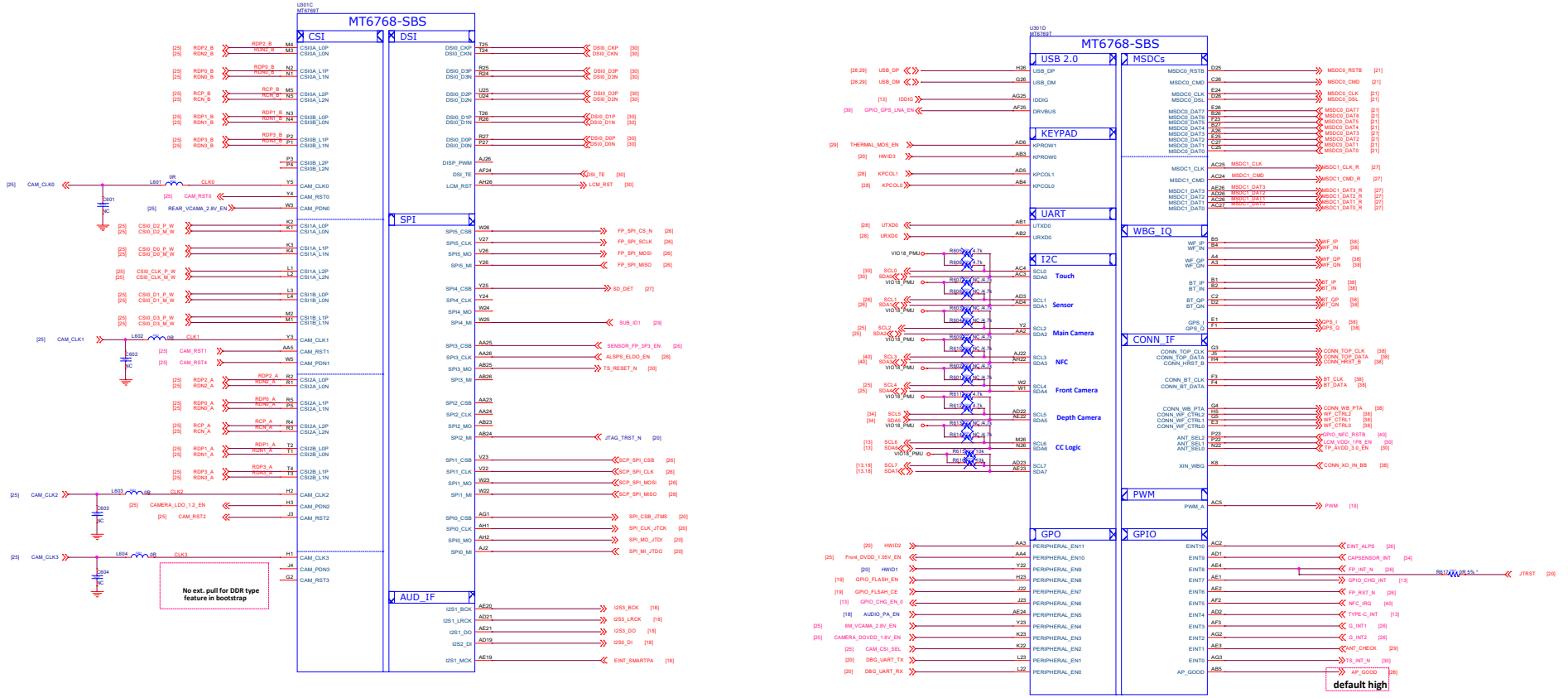

<Core Design>

MEDIATEK

Title

Size: D

MTK Confidential

Date: Friday, July 23, 2021 Sheet 8 of 32

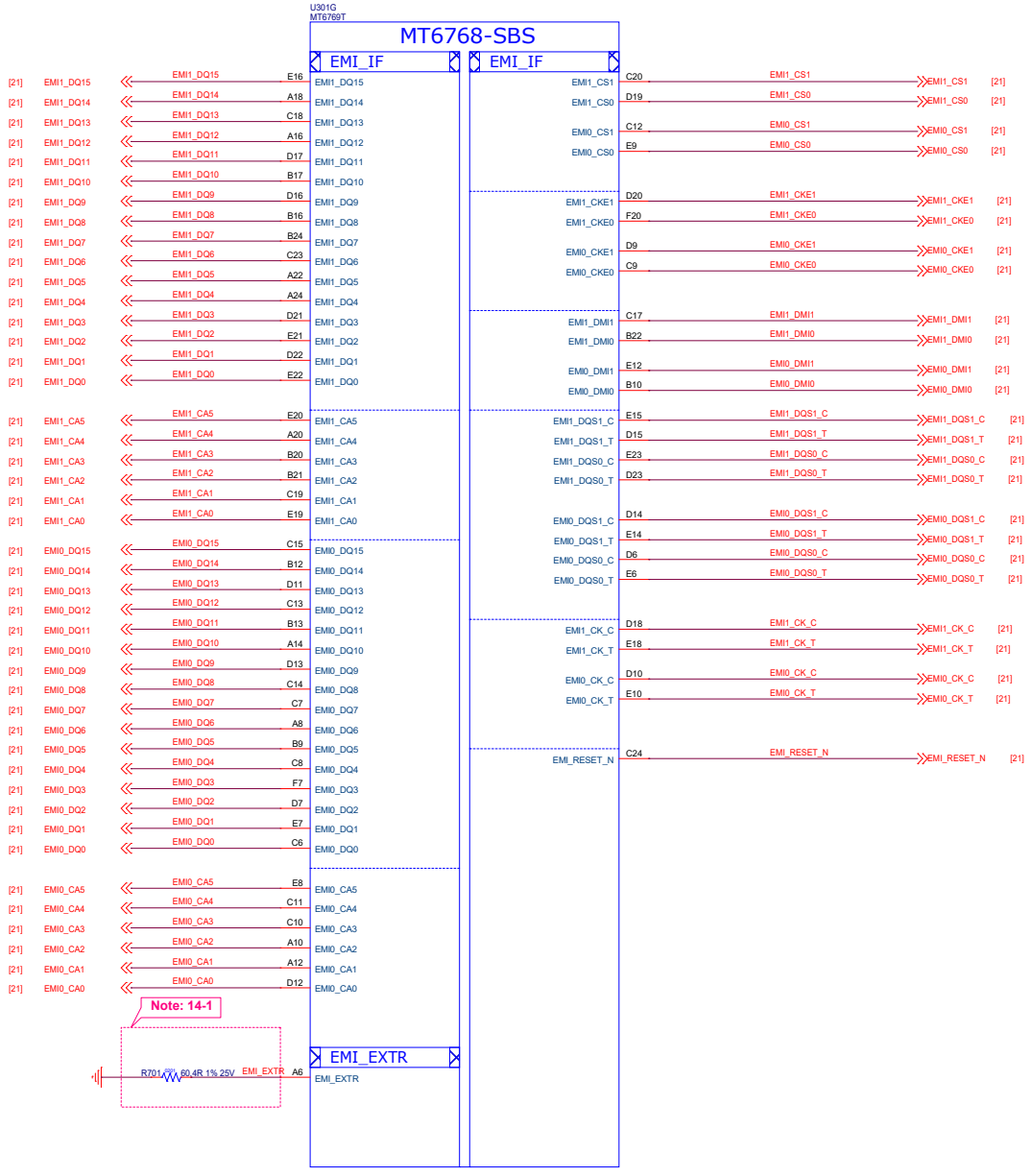

Schematic design notice of "14_BB_3" page.

Note 14-1: R701 please select 60.4 ohm (1%) resistor

<Core Design>

MEDIATEK

Title

Size C

MTK Confidential

Date: Friday, July 23, 2021 Sheet 7 of 32

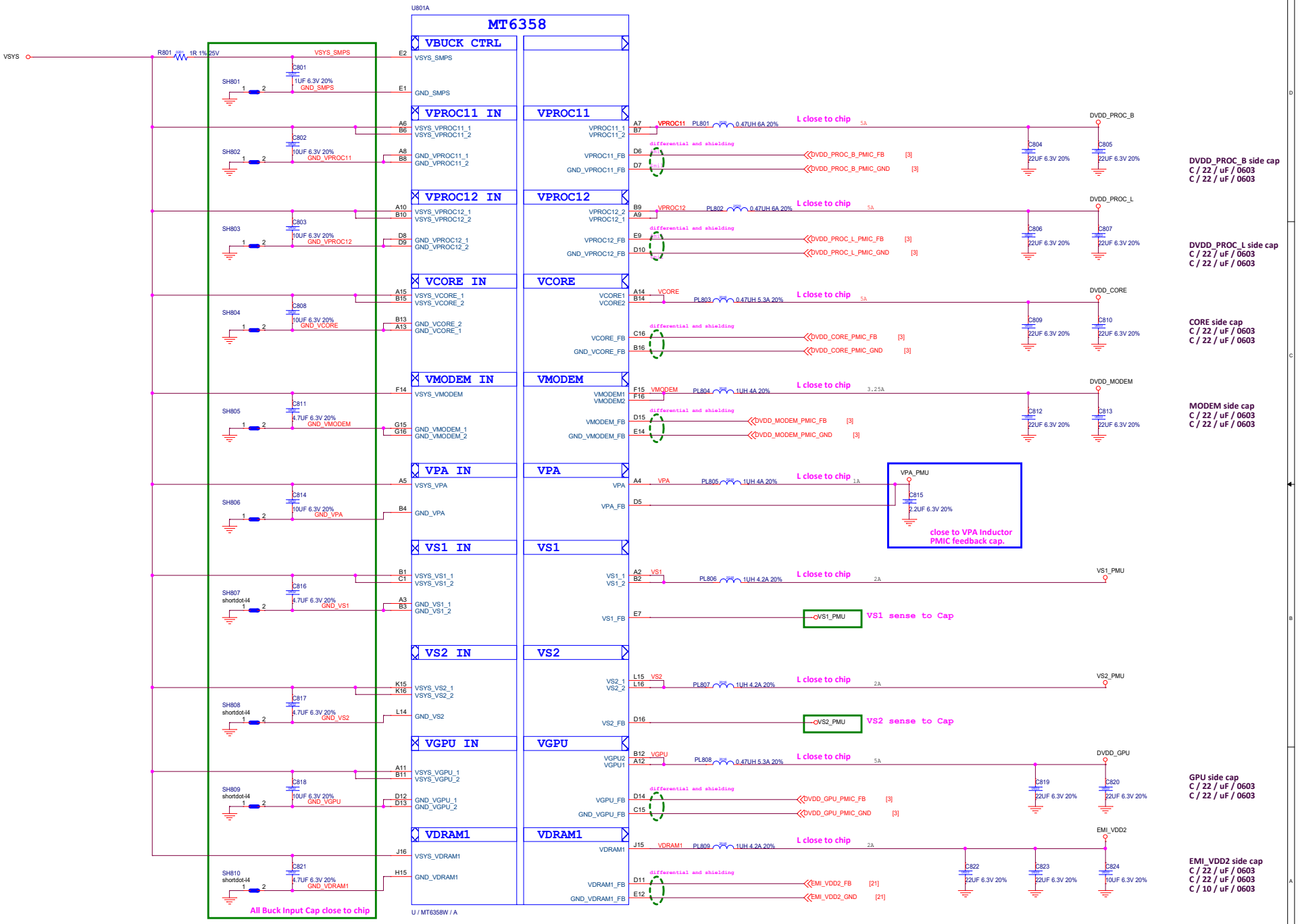

<Core Design>

MEDIATEK

Title

Size C

MTK Confidential

Date: Friday, July 23, 2021 Sheet 8 of 32

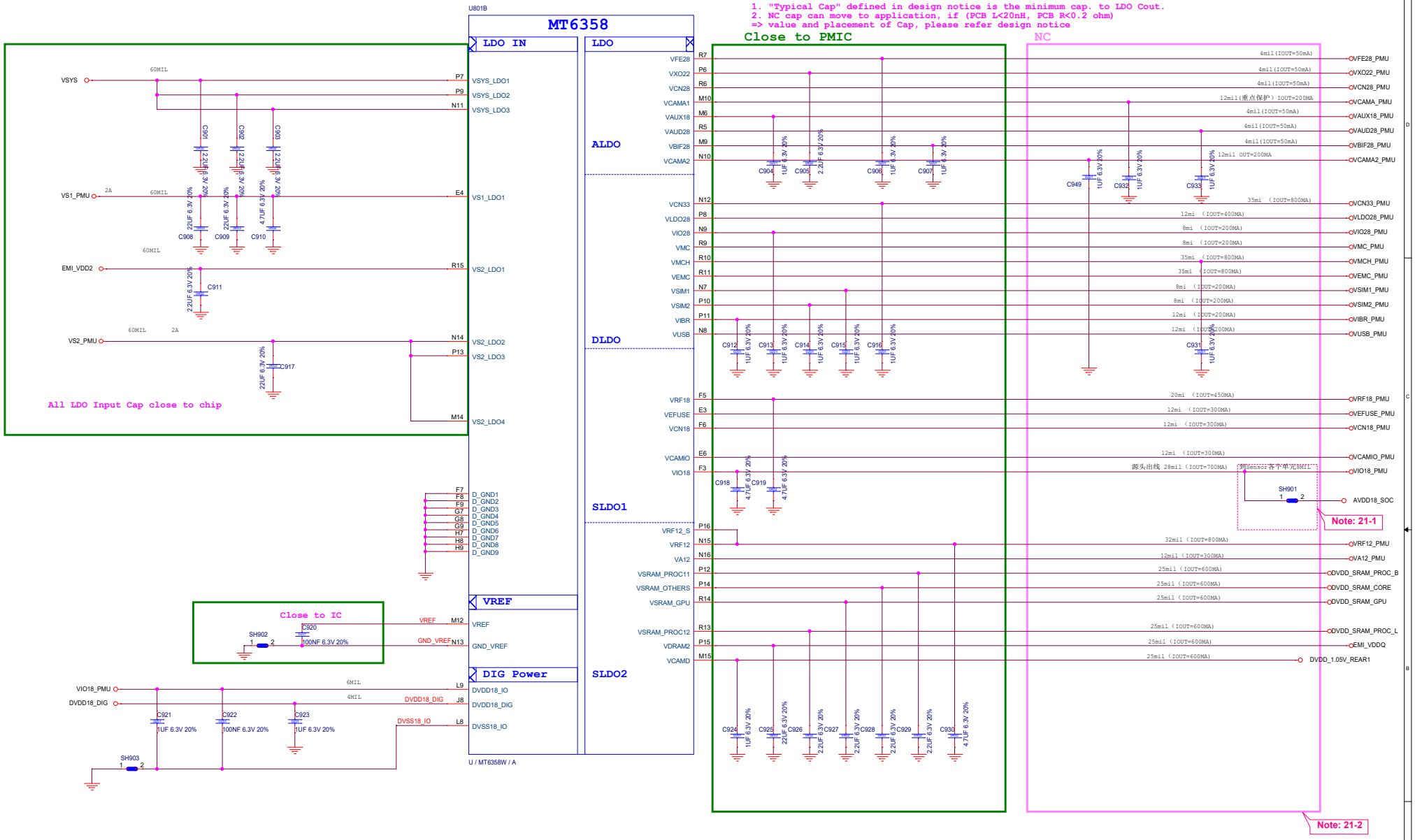

Schematic design notice of "21_POWER_MT6358-LDO" page.

Note 21-1: Please set SH2101 close to C2132, making star connection between VIO18_PMU and AVDD18_SOC near to LDO cap. C2132
Please also refer to MT6358 design notice for further detail design information

Note 21-2: If these power trace can meet LDO layout constraint, these CAP can be NC or removed.
Please refer to MT6358 design notice.

<Core Design>

MEDIATEK

Title: 10_POWER_MT6358-LDO

Size: C

MTK Confidential

Date: Saturday, July 24, 2021 Sheet 9 of 32

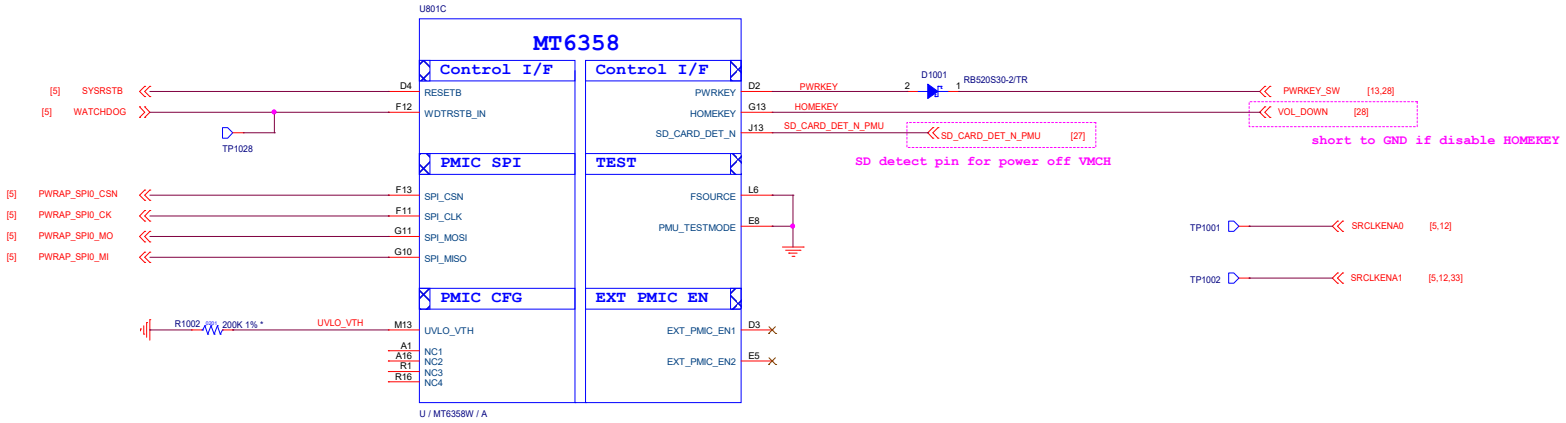

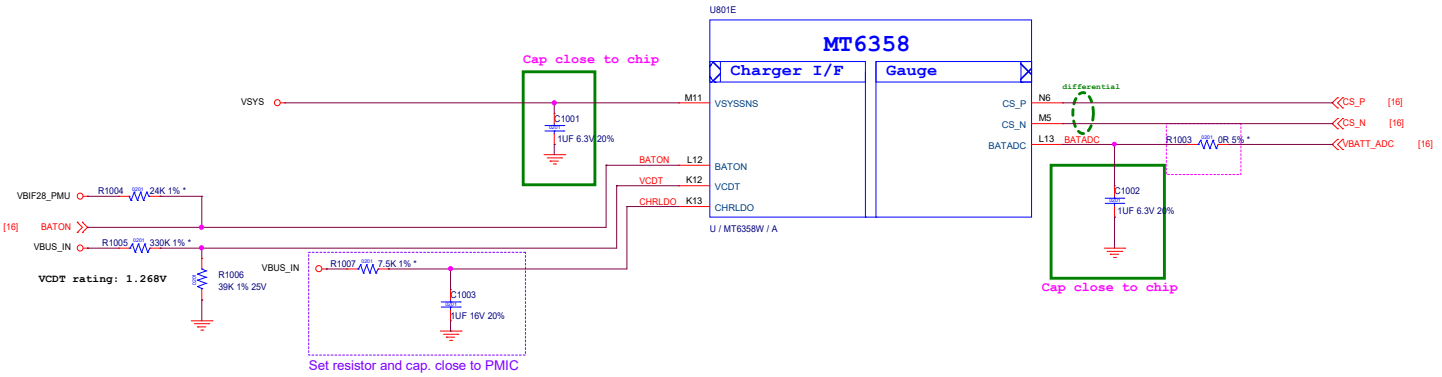

<Core Design>

MEDIATEK

Title: 10_POWER_MT6358-IF

Size: C

MTK Confidential

Date: Friday, July 23, 2021 Sheet 10 of 32

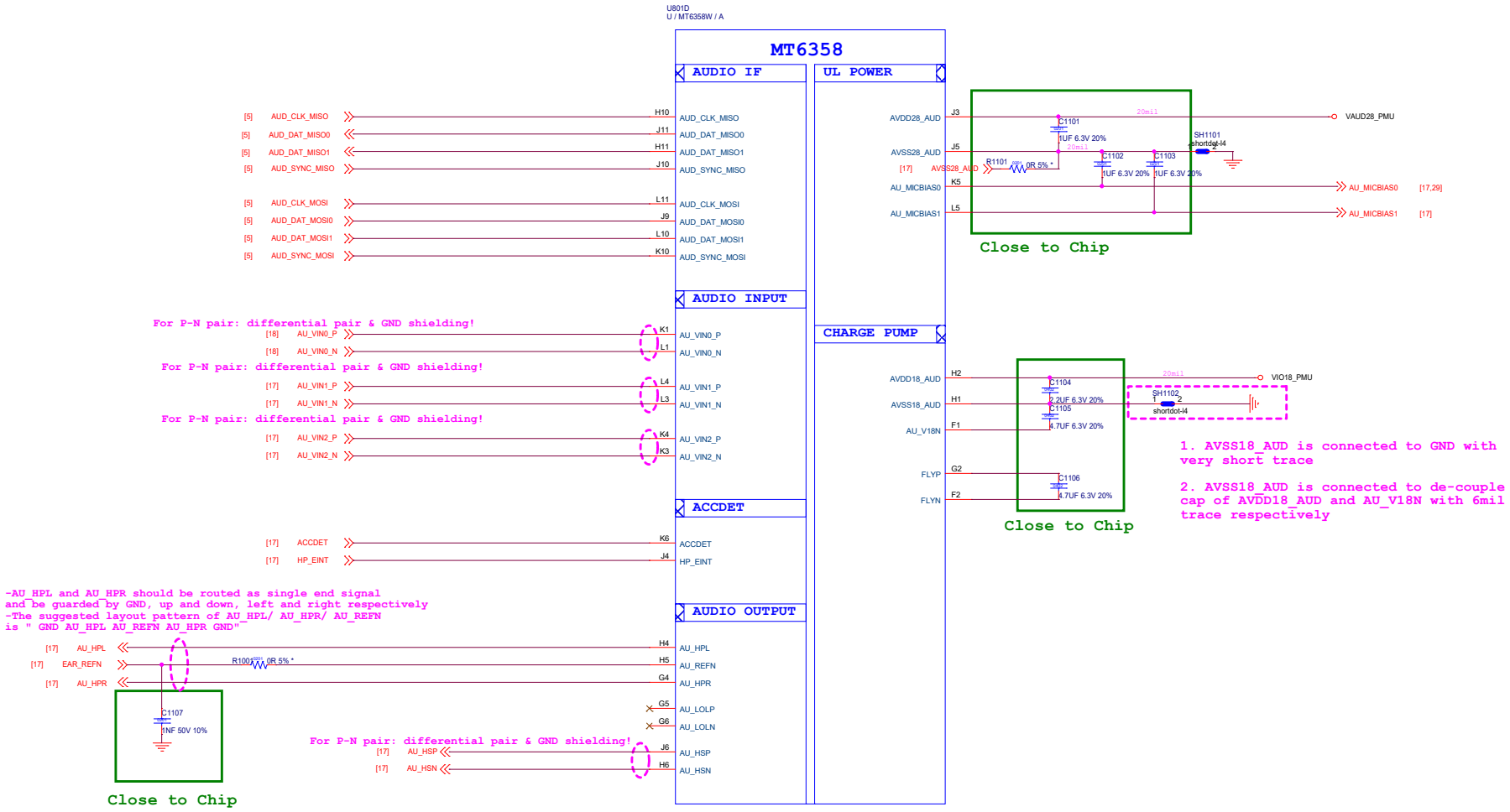

<Core Design>

MEDIATEK

Title: 11_POWER_MT6358-Audio

Size: C

MTK Confidential

Date: Friday, July 23, 2021 Sheet 11 of 32

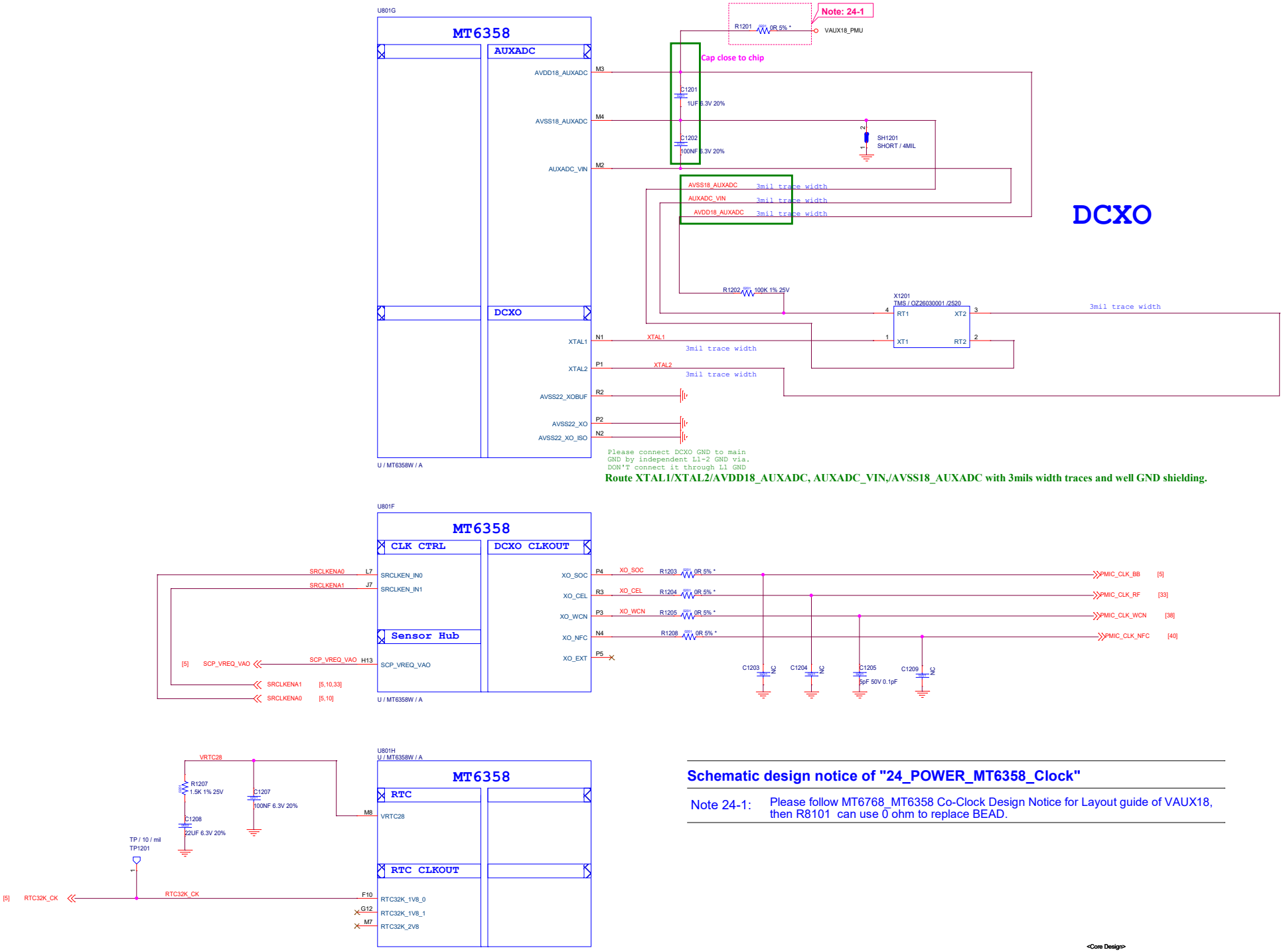

Schematic design notice of "24_POWER_MT6358_Clock"

Note 24-1: Please follow MT6768_MT6358 Co-Clock Design Notice for Layout guide of VAUX18, then R8101 can use 0 ohm to replace BEAD.

<Core Design>

MEDIATEK

Title: 12_POWER_MT6358_Clock

Size: C

MTK Confidential

Date: Friday, July 23, 2021 Sheet 12 of 32

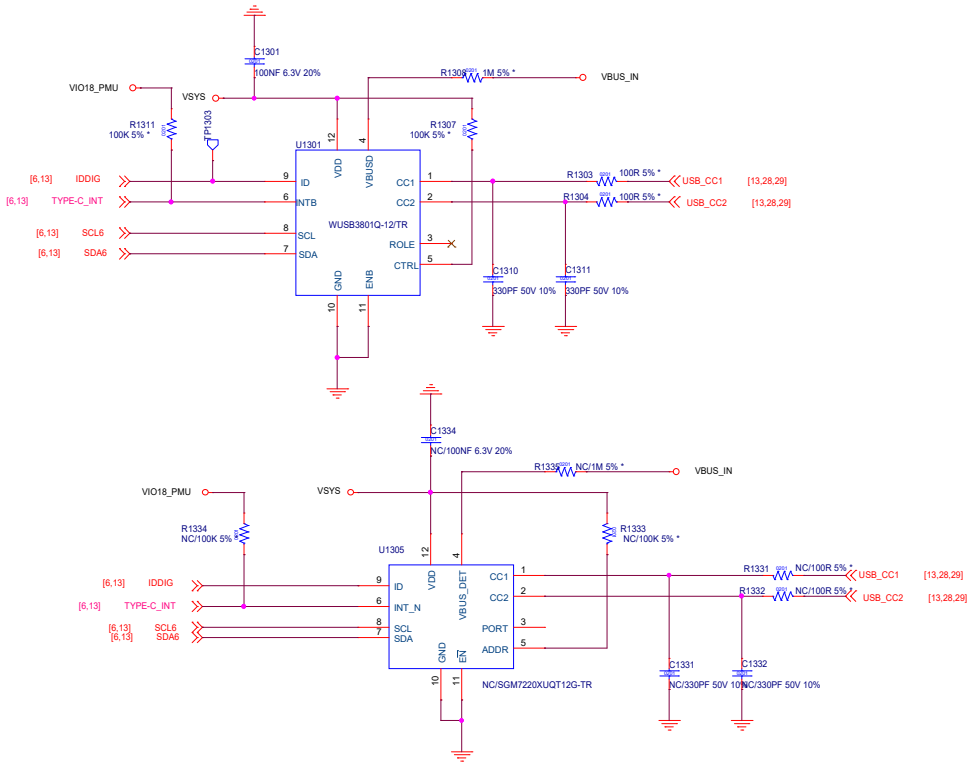

CC logic

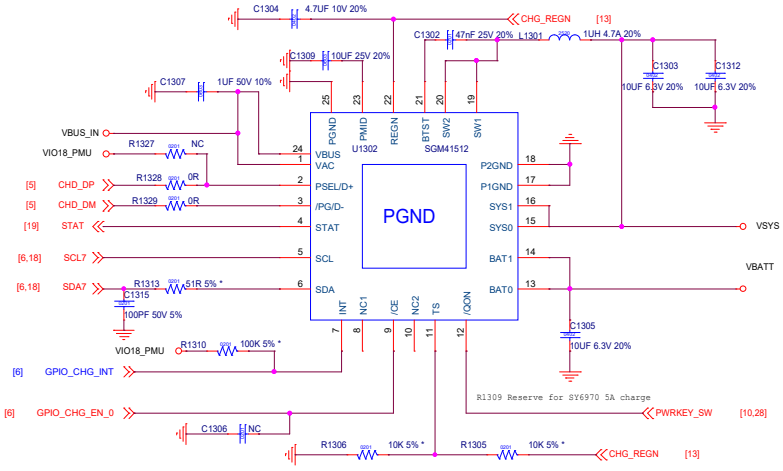

SGM41512 I2C slave address :OX6B

Switching Charger Power Path

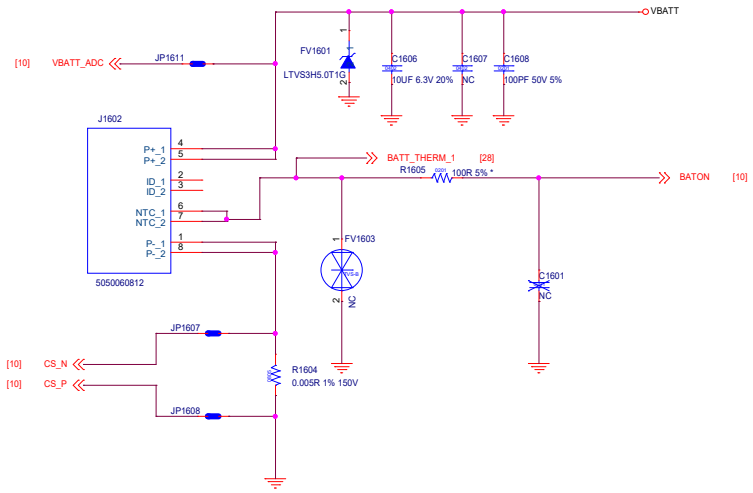

Battery Connector

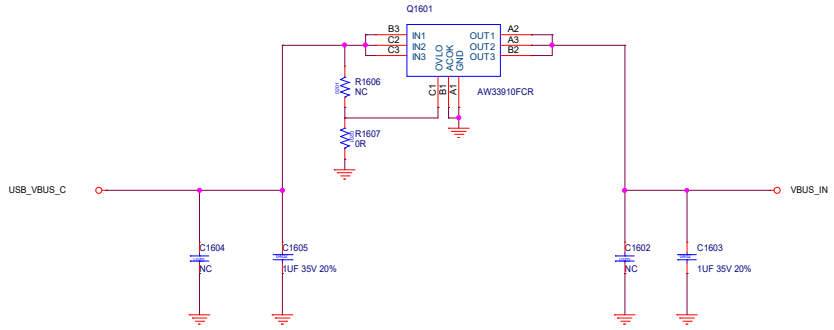

OVP

<Core Design>

MEDIATEK

Title

Size C

MTK Confidential

Date: Friday, July 23, 2021 Sheet 16 of 32

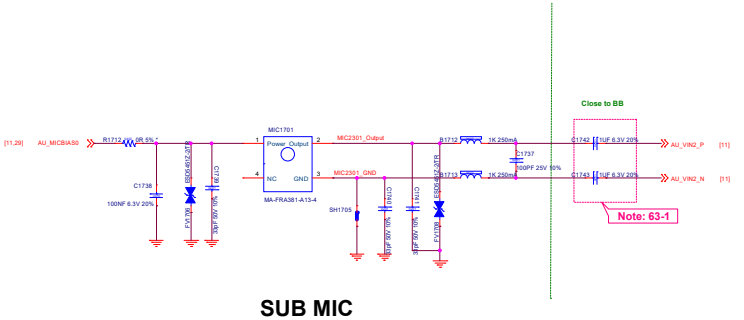

SUB MIC

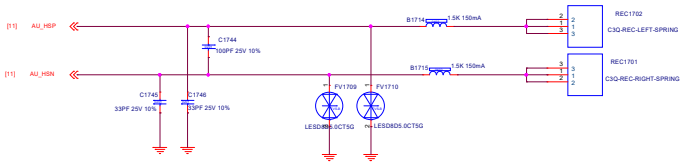

RECEIVER

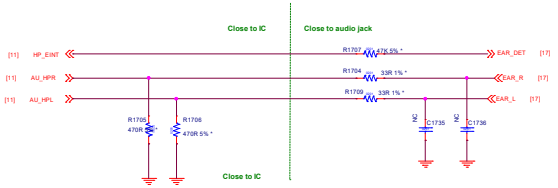

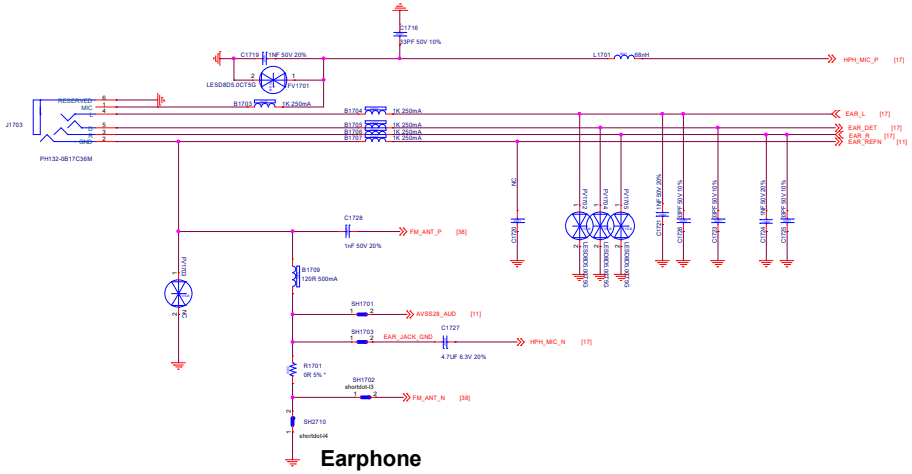

Earphone

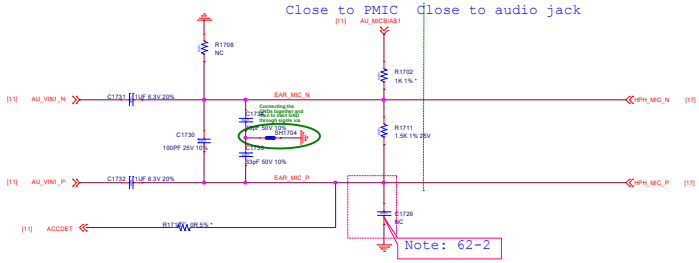

Earphone Microphone

MTK Confidential

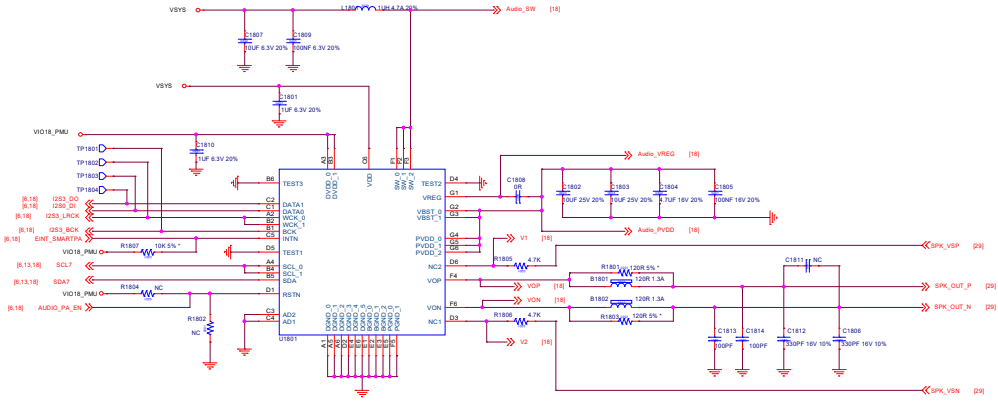

I2C slave address :OX34

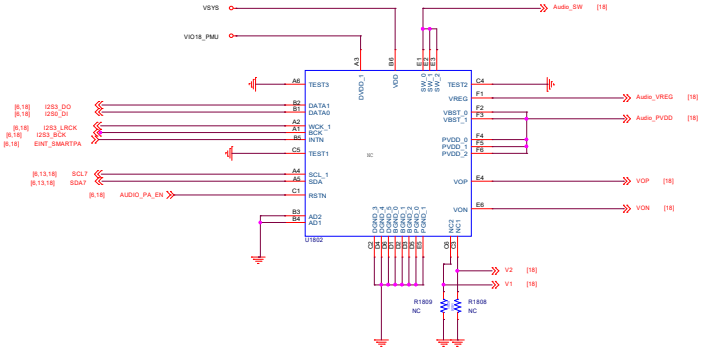

I2C slave address :OX34

Smart PA

Audio PA兼容焊盘设计

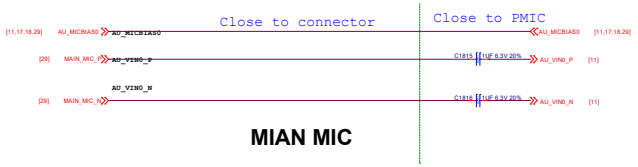

MIAN MIC

Title	<Title>	
Size D	Document Number <Doc>	Rev <RevCode>
Date: Friday, July 23, 2021	Sheet 18 of 40	

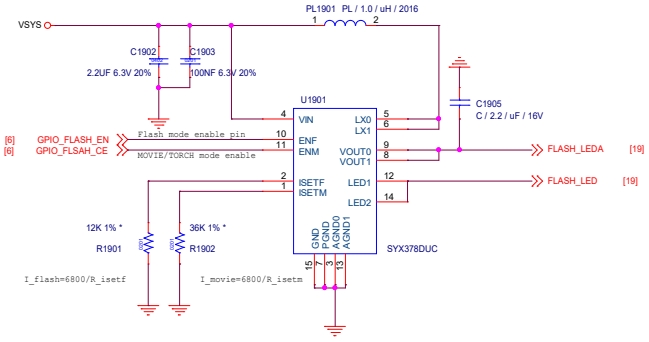

Flash LED Driver

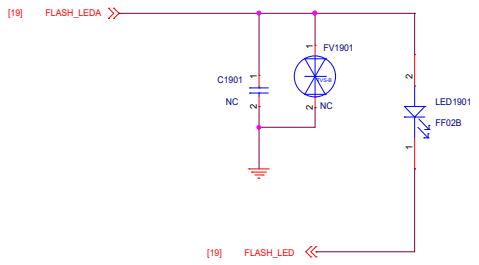

FLASH LED

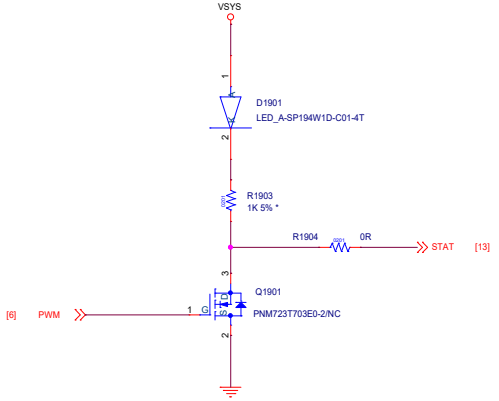

Charger indicator

SMT ON MAI

MEDIATEK

Title: 19_POWER_SubPMIC-HV powers

Size: C

MTK Confidential

Date: Friday, July 23, 2021 Sheet 19 of 40

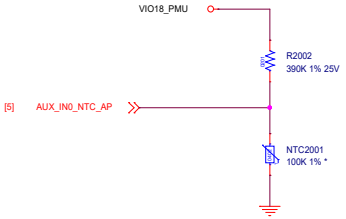

Thermistor to sense AP temperature

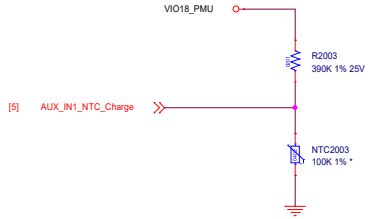

Thermistor to sense charge temperature

1. NTC2001must keep a distance about 6~8 mm away from AP and far from other heat sources 10 mm at least.
2. The distance is the shortest distance from package edge to edge.

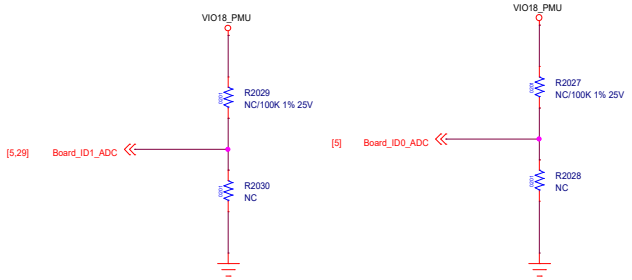

RF ADC SKU

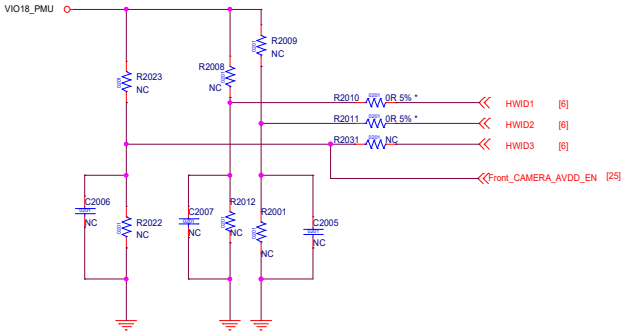

HWID

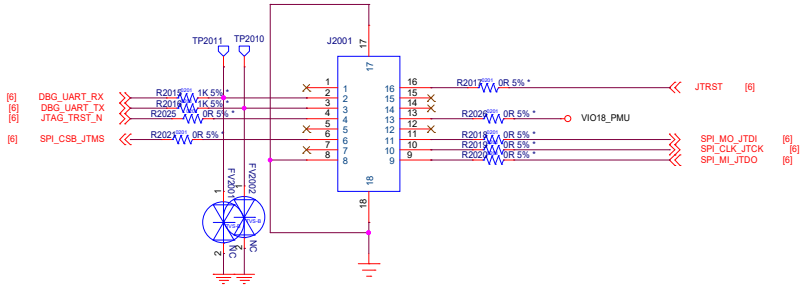

<Core Design>

MEDIATEK

Title: 15_BB_AUXADC_Thermal

Size: C

MTK Confidential

Date: Friday, July 23, 2021 Sheet 20 of 40

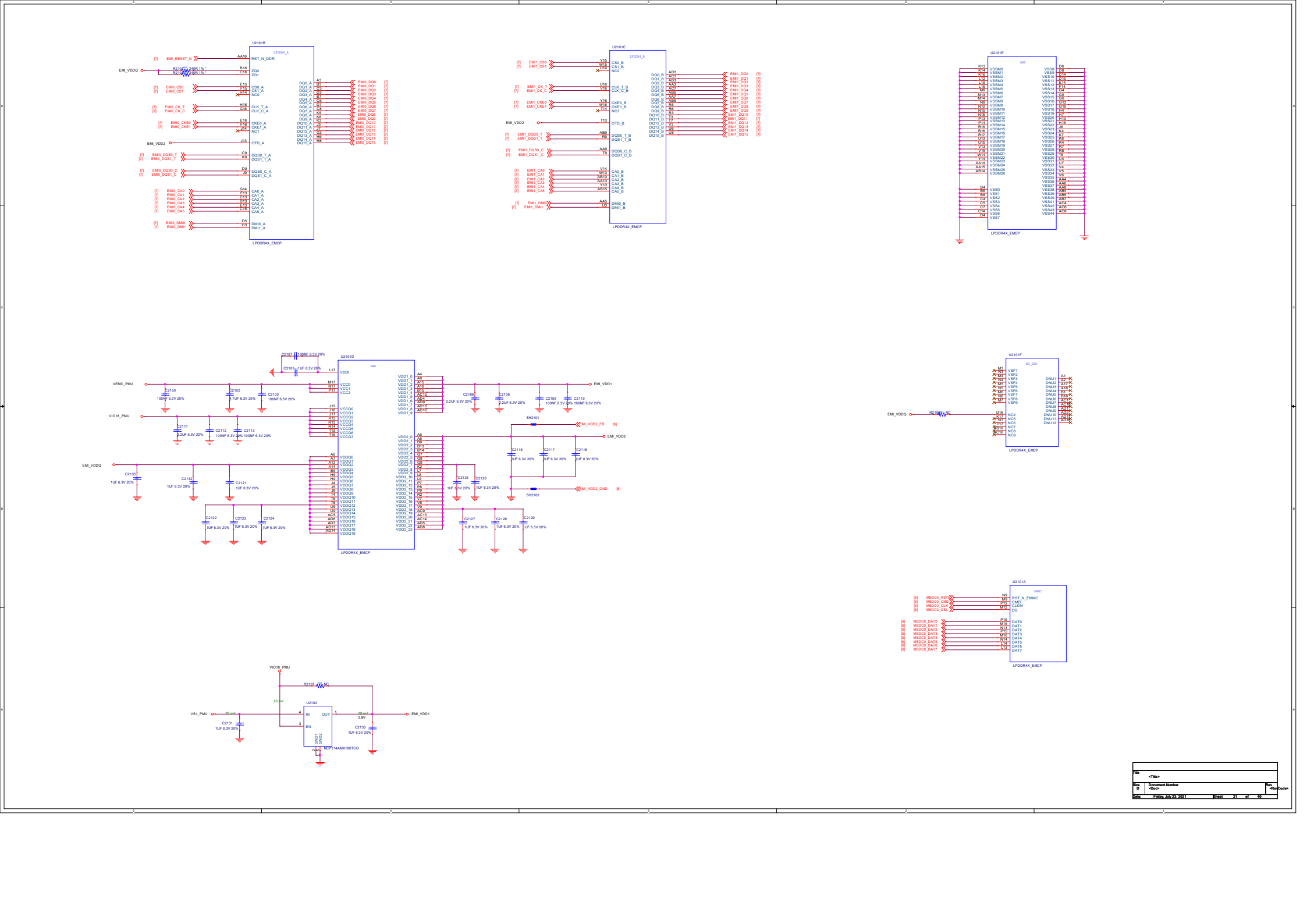
U2101B
LPDDR4X_EMCP
EMI_RESET_N
EMI_VDDQ
EMI_VDD2
U2101C
LPDDR4X_EMCP
U2101E
LPDDR4X_EMCP
U2101D
LPDDR4X_EMCP
VEMC_PMU
VIO18_PMU
EMI_VDDQ
EMI_VDD1
EMI_VDD2
SH2101
SH2102
U2101F
LPDDR4X_EMCP
U2101A
LPDDR4X_EMCP
U2102
TCP7144MX180TCG
VS1_PMU
VIO18_PMU
EMI_VDD1
Title
<Title>
Size D
Document Number
<Doc>
Rev
<RevCode>
Date: Friday, July 23, 2021
Sheet 21 of 49

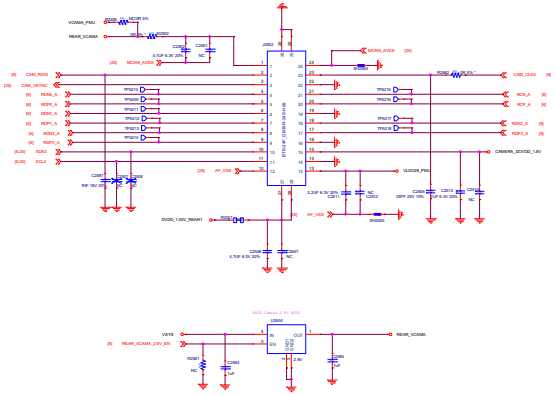

Main Camera 50M

I2C地址 芯片 0xA2H(W)/0XA3H(R)
I2C地址 Driver IC 0x18H(W)/0X19H(R)
I2C地址 EEPROM 0xA0H(W)/0XA1H(R)
---RST Low Active---

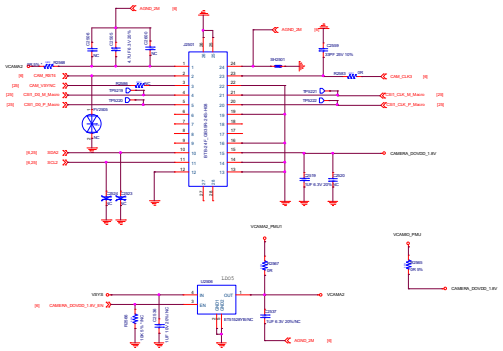

Macro Camera 2M

I2C地址 芯片 0x6EH(W)/0X6FH(R)
I2C地址 Driver IC N/A
I2C地址 EEPROM N/A

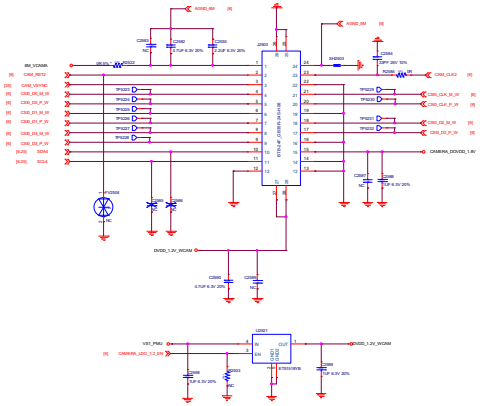

Wide CAMERA 8M

I2C地址 芯片 0x5AH(W)/0X5BH(R)
I2C地址 Driver IC NA
I2C地址 EEPROM NA

8M AVDD

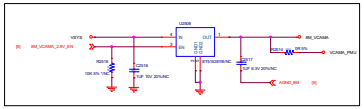

13M AVDD

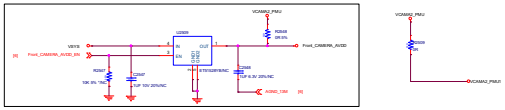

13M

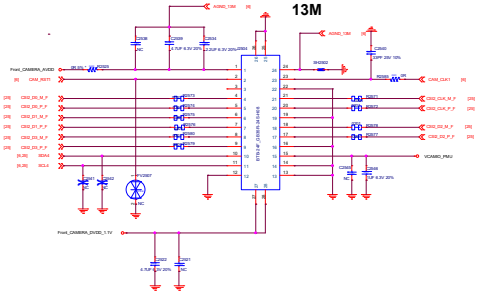

FRONT CAMERA 13MP

I2C地址 芯片 0x46H(W)/0X47H(R)
I2C地址 Driver IC NA
I2C地址 EEPROM 0xA2H(W)/0XA3H(R)

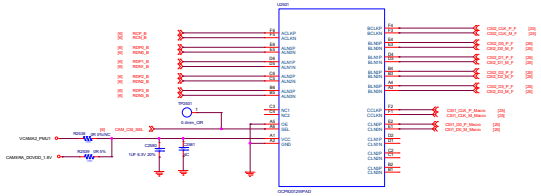

MIPI SW2

FRONT CAMERA

2M Macro

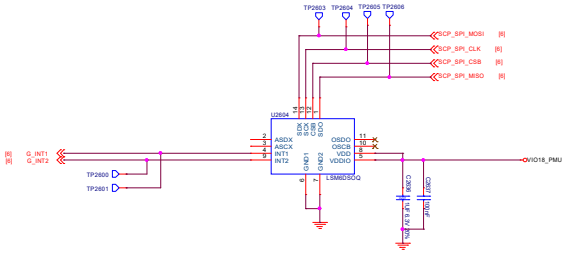

A+GYRO

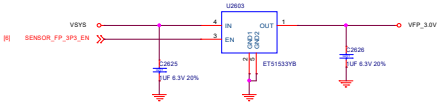

FP

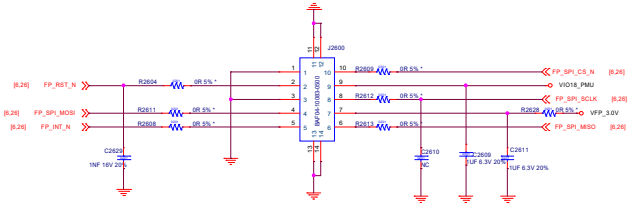

MMC5603NJL I2C slave address :OX30

M SENSOR

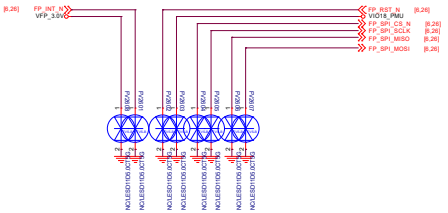

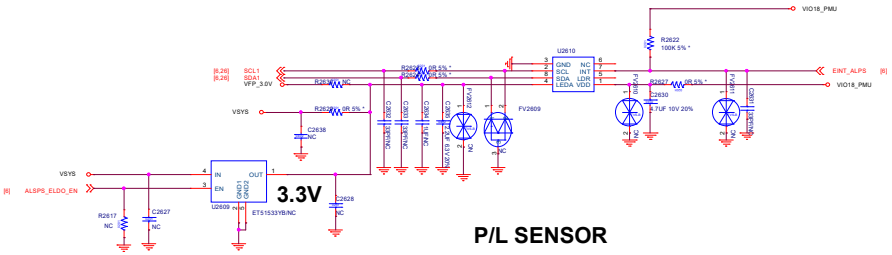

P/L SENSOR

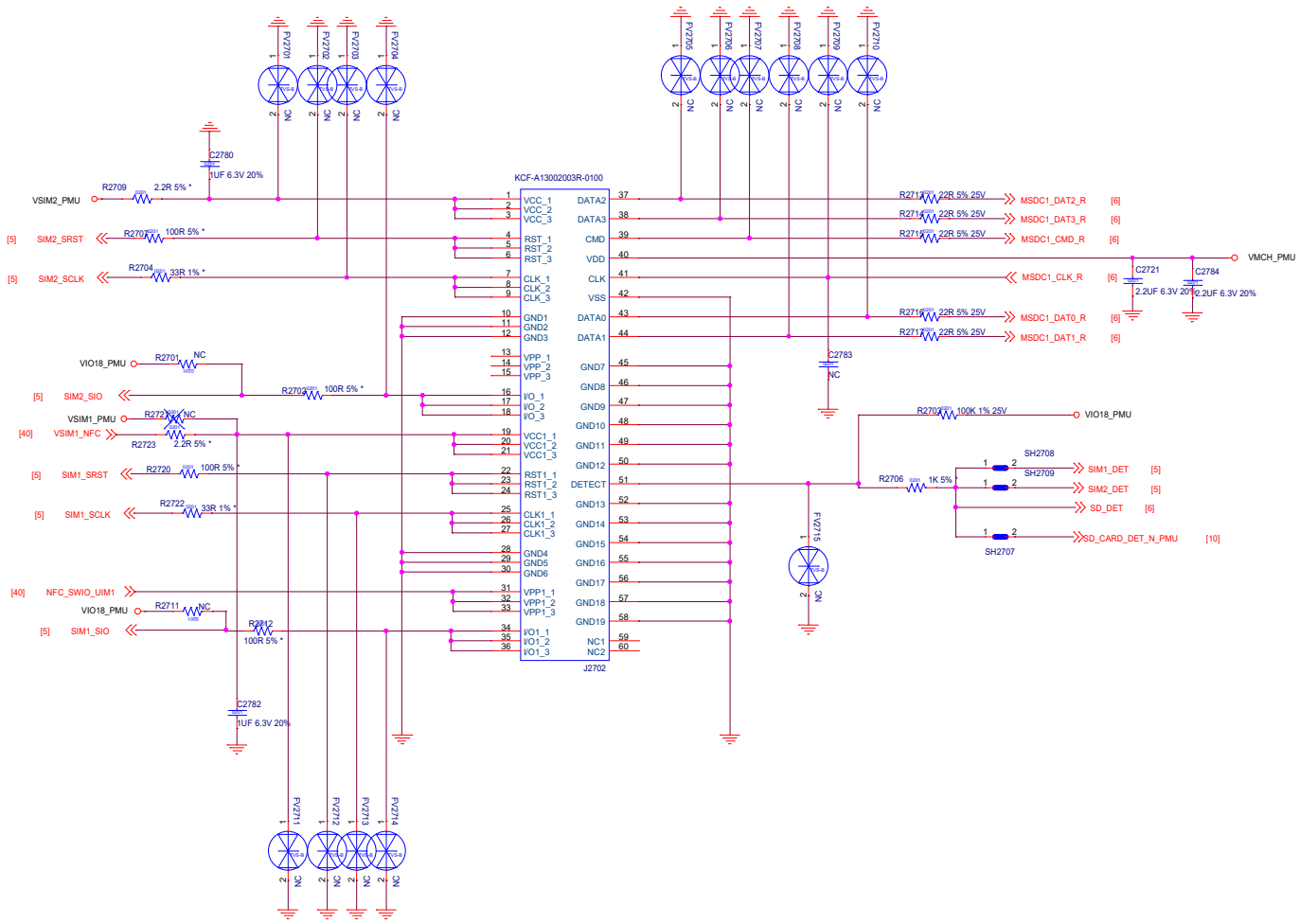

<Core Design>

MEDIATEK

Title

Size C

MTK Confidential

Date: Friday, July 23, 2021 Sheet 27 of 40

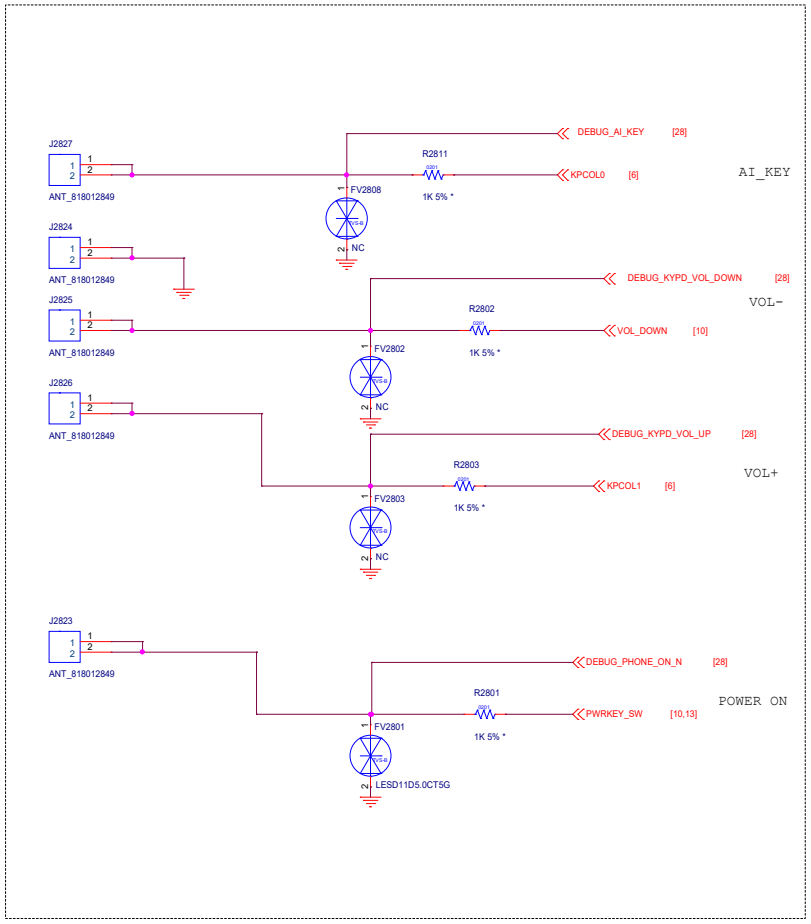

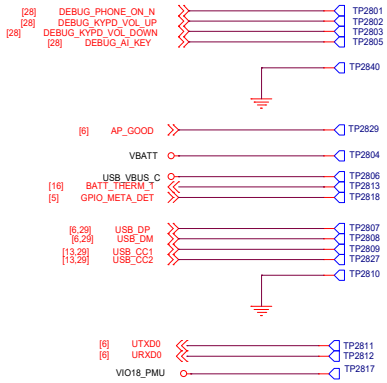

屏蔽盖

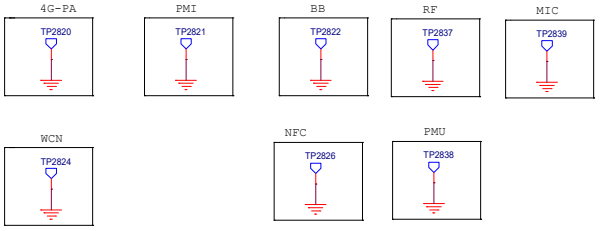

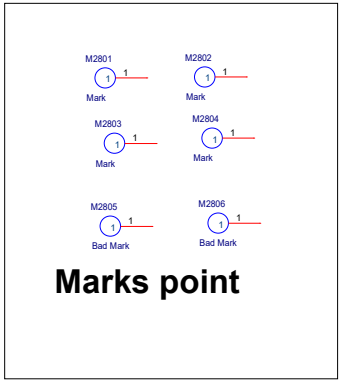

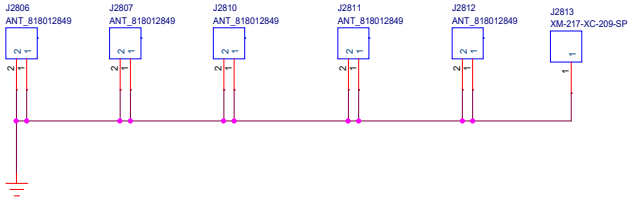

USE FOR GND

<Core Design>

MEDIATEK

Title: 28_PERI_KEYPAD

Size: C

MTK Confidential

Date: Friday, July 23, 2021 Sheet 28 of 40

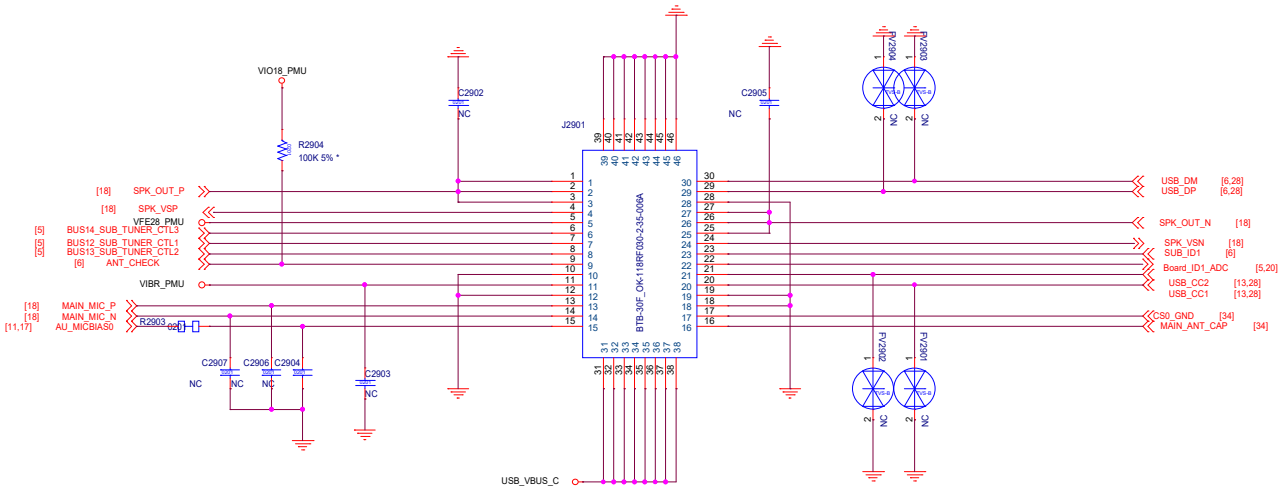

Sub Connector

10V 3A / 5V 2A

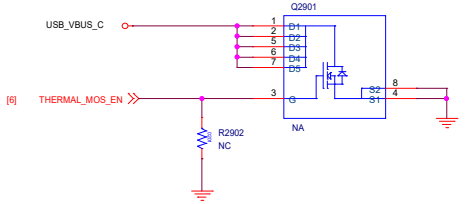

<Core Design>

MEDIATEK

Title

Size C

MTK Confidential

Date: Friday, July 23, 2021 Sheet 29 of 40

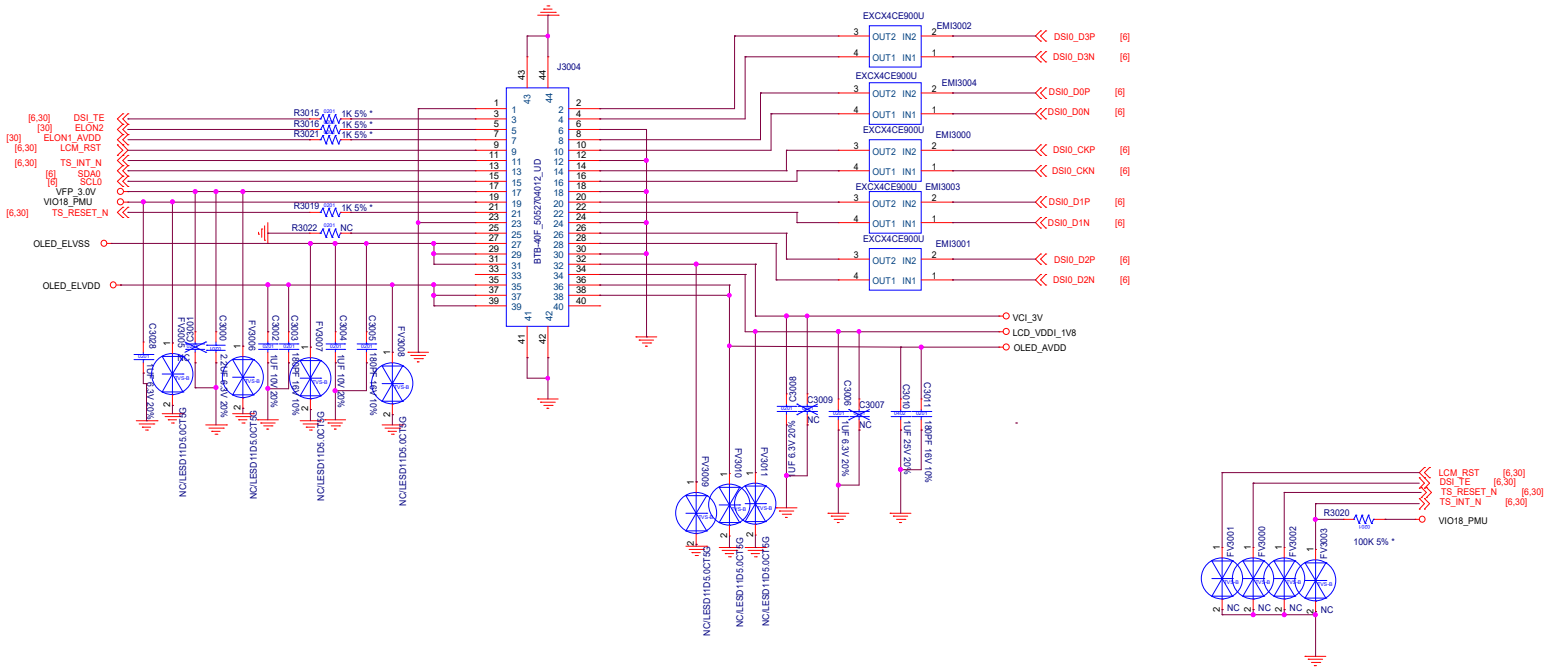
J3004
BTB-40F-5052704012_UD
EXCX4CE900U
EMI3002
EMI3004
EMI3000
EMI3003
EMI3001
DSI0_D3P
DSI0_D3N
DSI0_D0P
DSI0_D0N
DSI0_CKP
DSI0_CKN
DSI0_D1P
DSI0_D1N
DSI0_D2P
DSI0_D2N
R3015 1K 5% *
R3016 1K 5% *
R3021 1K 5% *
R3019 1K 5% *
R3022 NC
DSI_TE
ELON2
ELON1_AVDD
LCM_RST
TS_INT_N
SDA0
SCL0
VFP_3.0V
VIO18_PMU
TS_RESET_N
OLED_ELVSS
OLED_ELVDD
VCI_3V
LCD_VDDI_1V8
OLED_AVDD

LCM_RST
DSI_TE
TS_RESET_N
TS_INT_N
VIO18_PMU
R3020
100K 5% *

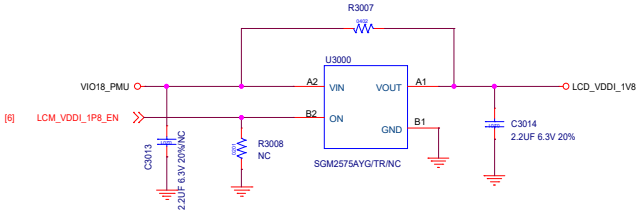
R3007
U3000
SGM2575AYG/TR/NC
VIO18_PMU
LCD_VDDI_1V8
LCM_VDDI_1P8_EN
R3008 NC
C3013 2.2UF 6.3V 20% NC
C3014 2.2UF 6.3V 20%

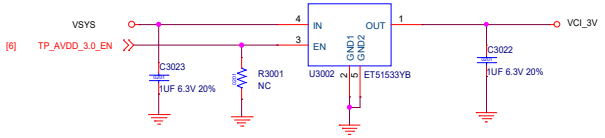
VSYS
TP_AVDD_3.0_EN
U3002
ET51533YB
R3001 NC
C3023 1UF 6.3V 20%
C3022 1UF 6.3V 20%
VCI_3V

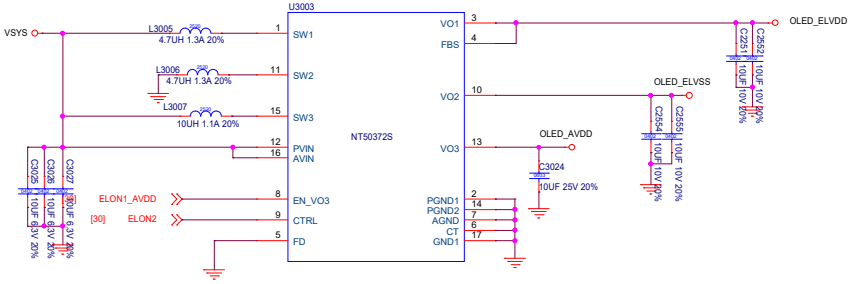
U3003
NT50372S
VSYS
L3005 4.7UH 1.3A 20%
L3006 4.7UH 1.3A 20%
L3007 10UH 1.1A 20%
ELON1_AVDD
ELON2
OLED_ELVDD
OLED_ELVSS
OLED_AVDD
C3024 10UF 25V 20%

OLED POWER

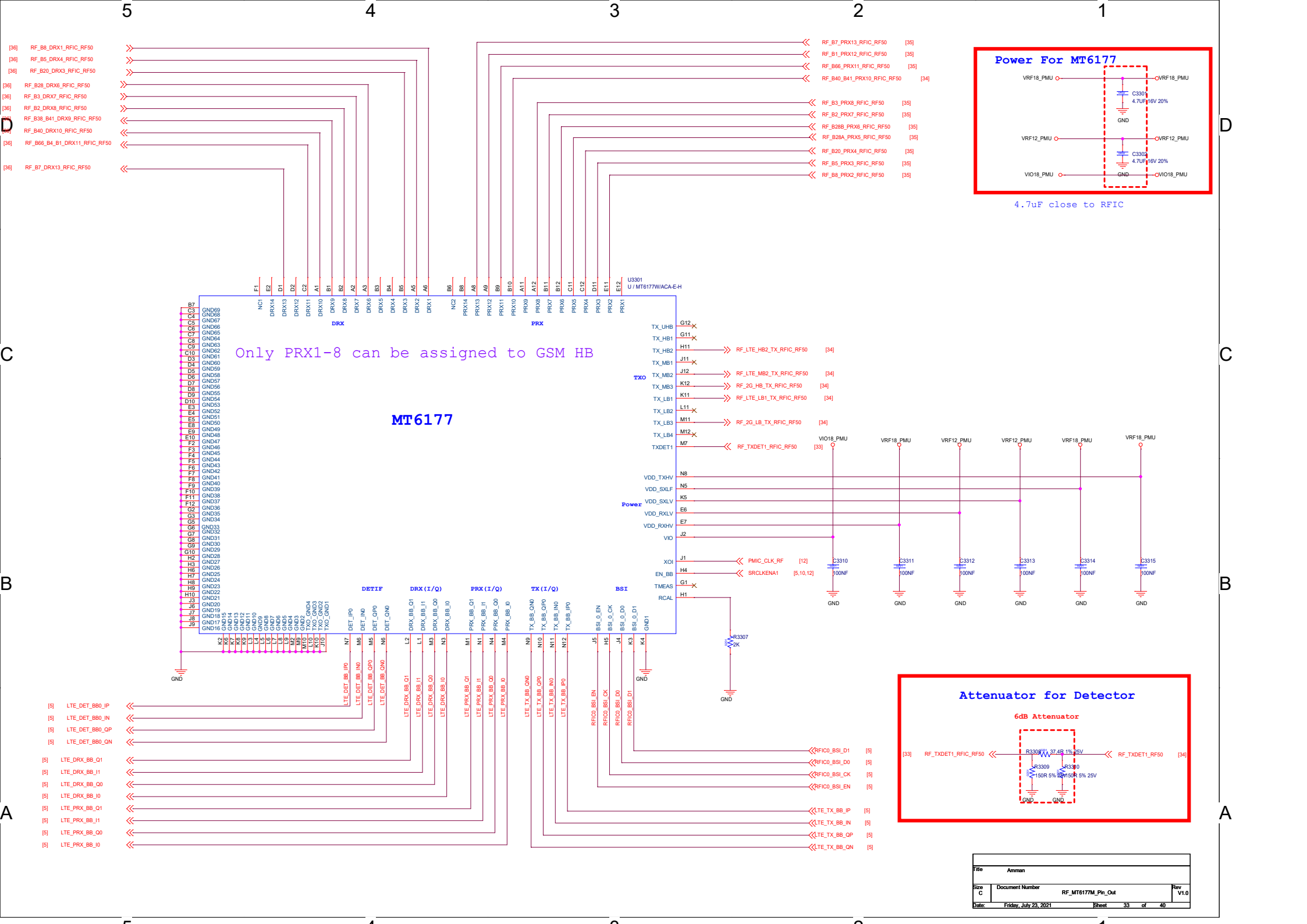
Power For MT6177
VRF18_PMU
VRF12_PMU
VIO18_PMU
C3301
4.7UF 16V 20%
C3304
4.7UF 16V 20%
GND
4.7uF close to RFIC
MT6177
U3301
U / MT6177W/ACA-E-H
Only PRX1-8 can be assigned to GSM HB
DRX
PRX
TXO
Power
DETIF
DRX(I/Q)
PRX(I/Q)
TX(I/Q)
BSI
RF_B8_DRX1_RFIC_RF50
RF_B5_DRX4_RFIC_RF50
RF_B20_DRX3_RFIC_RF50
RF_B28_DRX6_RFIC_RF50
RF_B3_DRX7_RFIC_RF50
RF_B2_DRX8_RFIC_RF50
RF_B38_B41_DRX9_RFIC_RF50
RF_B40_DRX10_RFIC_RF50
RF_B66_B4_B1_DRX11_RFIC_RF50
RF_B7_DRX13_RFIC_RF50
RF_B7_PRX13_RFIC_RF50
RF_B1_PRX12_RFIC_RF50
RF_B66_PRX11_RFIC_RF50
RF_B40_B41_PRX10_RFIC_RF50
RF_B3_PRX8_RFIC_RF50
RF_B2_PRX7_RFIC_RF50
RF_B28B_PRX6_RFIC_RF50
RF_B28A_PRX5_RFIC_RF50
RF_B20_PRX4_RFIC_RF50
RF_B5_PRX3_RFIC_RF50
RF_B8_PRX2_RFIC_RF50
RF_LTE_HB2_TX_RFIC_RF50
RF_LTE_MB2_TX_RFIC_RF50
RF_2G_HB_TX_RFIC_RF50
RF_LTE_LB1_TX_RFIC_RF50
RF_2G_LB_TX_RFIC_RF50
RF_TXDET1_RFIC_RF50
PMIC_CLK_RF
SRCLKENA1
R3307
2K
C3310
C3311
C3312
C3313
C3314
C3315
100NF
LTE_DET_BB0_IP
LTE_DET_BB0_IN
LTE_DET_BB0_QP
LTE_DET_BB0_QN
LTE_DRX_BB_Q1
LTE_DRX_BB_I1
LTE_DRX_BB_Q0
LTE_DRX_BB_I0
LTE_PRX_BB_Q1
LTE_PRX_BB_I1
LTE_PRX_BB_Q0
LTE_PRX_BB_I0
RFIC0_BSI_D1
RFIC0_BSI_D0
RFIC0_BSI_CK
RFIC0_BSI_EN
LTE_TX_BB_IP
LTE_TX_BB_IN
LTE_TX_BB_QP
LTE_TX_BB_QN
Attenuator for Detector
6dB Attenuator
R3308
37.4R 1% 25V
R3309
150R 5% 25V
R3310
150R 5% 25V
RF_TXDET1_RFIC_RF50
Title
Amman
Size
C
Document Number
RF_MT6177M_Pin_Out
Rev
V1.0
Date:
Friday, July 23, 2021
Sheet
33
of
40

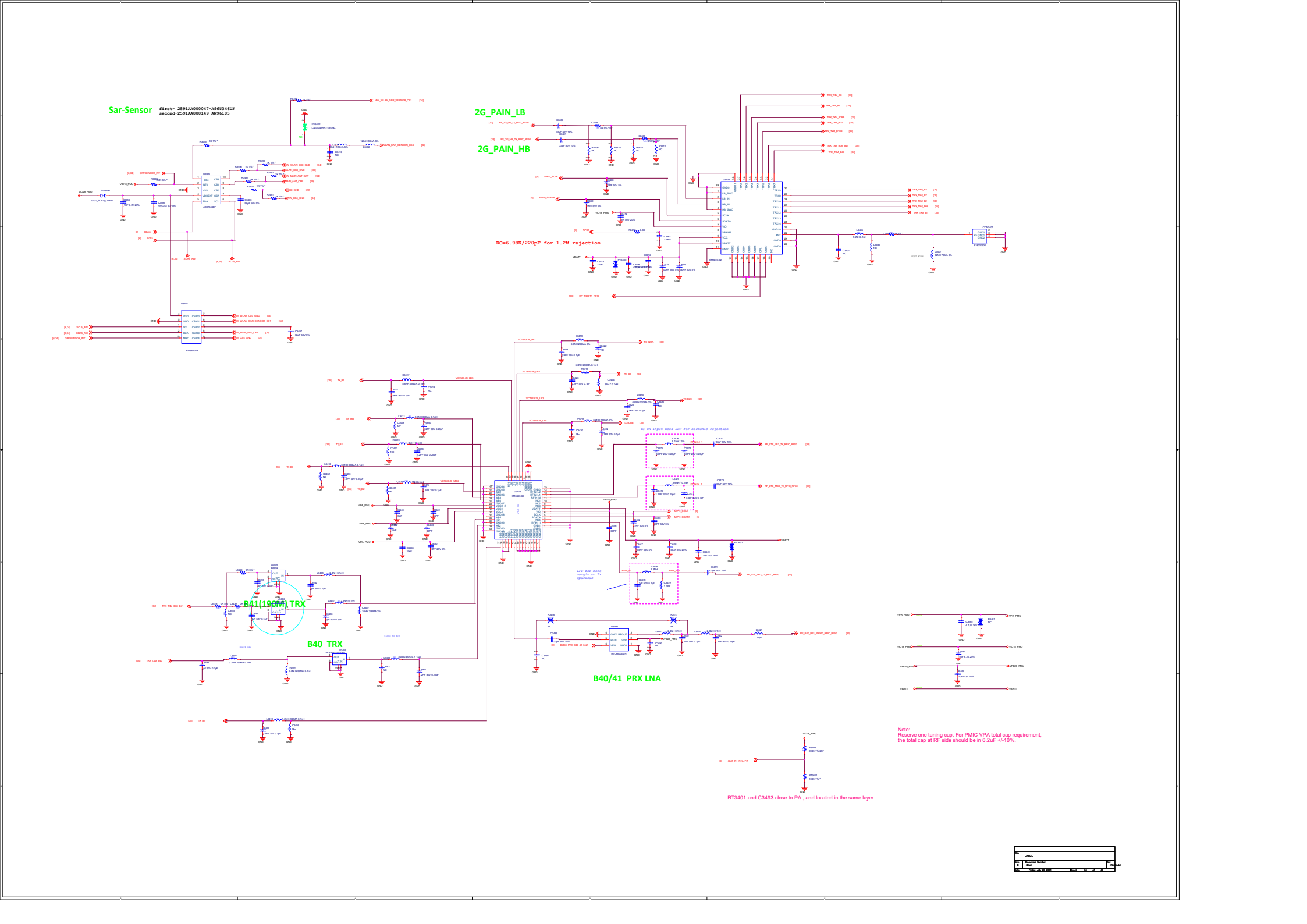
Sar-Sensor
first- 2591AA000047-A96Y346DF
second-2591AA000149 AM96105
2G_PAIN_LB
2G_PAIN_HB
RC=6.98K/220pF for 1.2M rejection
40 PA input need LPF for harmonic rejection
LPF for more margin on Tx spurious
B41(195CM) TRX
B40 TRX
B40/41 PRX LNA
Note:
Reserve one tuning cap. For PMIC VPA total cap requirement, the total cap at RF side should be in 6.2uF +/-10%.
RT3401 and C3493 close to PA , and located in the same layer

B1 TRX

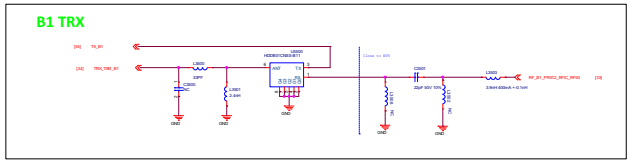

B3 TRX

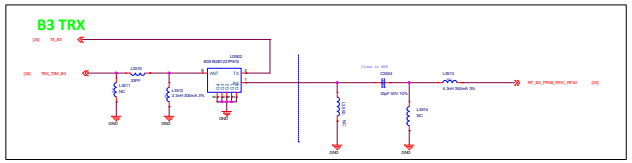

B2 TRX

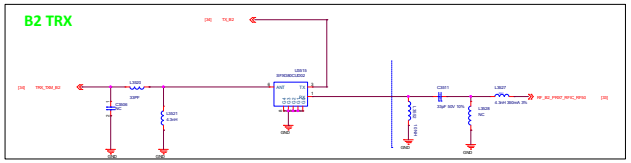

B66 TRX

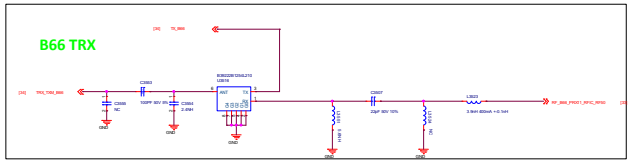

B7 TRX

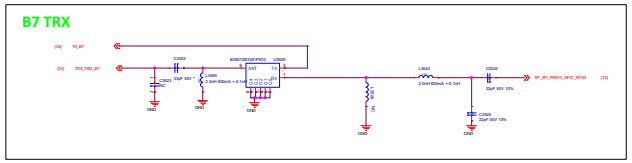

B5/26 TRX

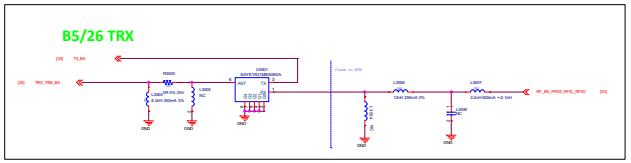

B8 TRX

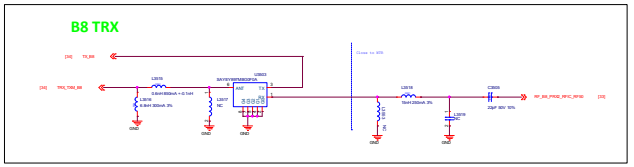

B20 TRX

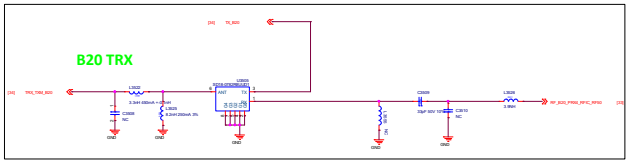

B28A TRX

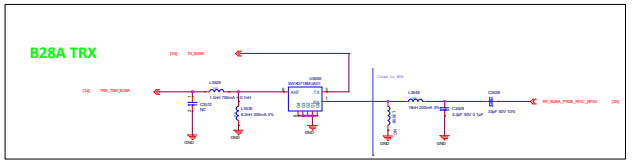

B28B TRX

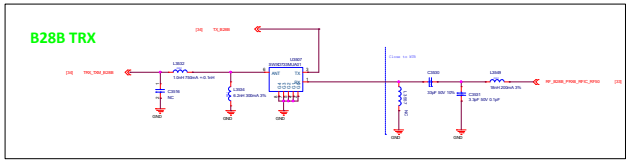

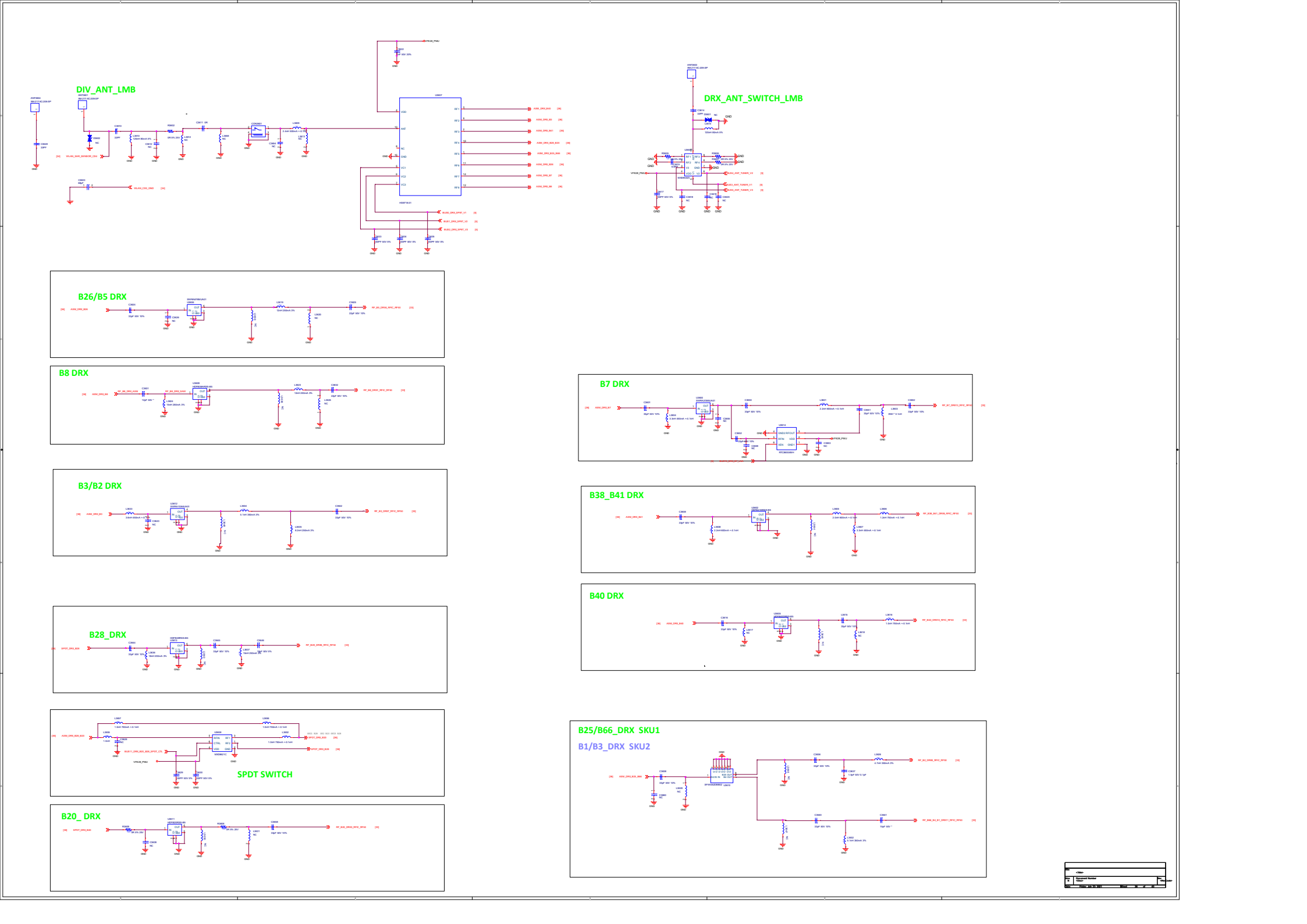
DIV_ANT_LMB
DRX_ANT_SWITCH_LMB
B26/B5 DRX
B8 DRX
B7 DRX
B3/B2 DRX
B38_B41 DRX
B40 DRX
B28_DRX
SPDT SWITCH
B25/B66_DRX SKU1
B1/B3_DRX SKU2
B20_ DRX

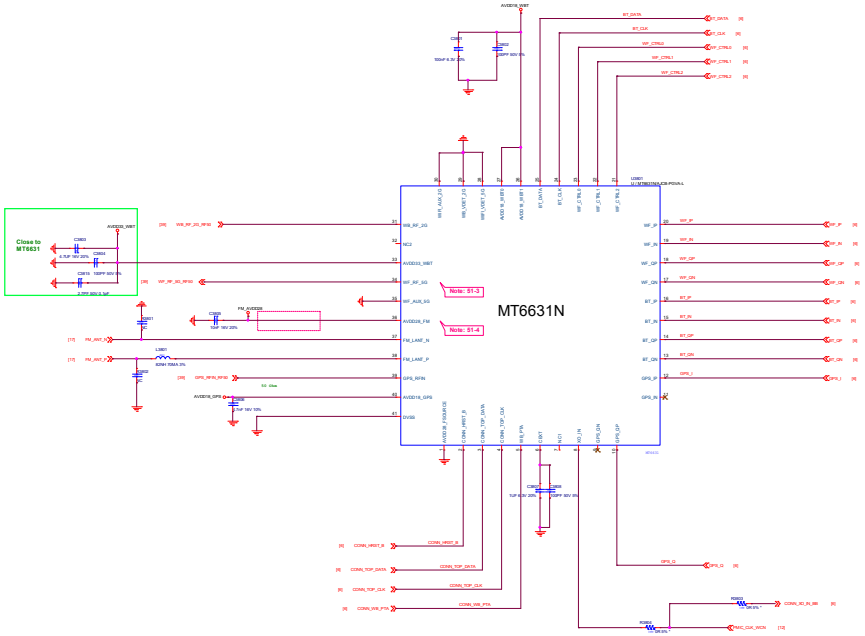

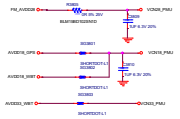

Note 51-1: For R3808 size, please select 0402 size or larger one

Note 51-2: Please refer to MT6765 Baseband design notice for VCN33 LDO selection guide

Note 51-3: If WiFi 5G not support, connect pin 34(WF_RF_5G) to GND

Note 51-4: Pin 36 (AVDD28_FM) must be connected to VCN28 even if FM not support

PMIC Rail	Pin Name	Pin Number	Peak current at pin(mA)
1.3V_RFA	VDD13_BT_BB_WL	26	120
	VDD13_WL_SYNTH_CH0	46	40
	VDD13_BT_SYNTH	5	15
	VDD11D_PM	43	20
	VDD13_FM	12	15
	VDD13_BT_FM_BBPLL	4	10
	VDD13_BT_PM	29	20
3.3V_CH0	VDD33_WL_CH0	55	450
	VDD33_WL_5GPA_DRV_CH0	61	70
	VDD33_WL_BT_DRV_CH0	34	65
	VDD33_PM_DLDO	71	5
	VDD33_FEM	2	1
1.8V_IO	VDD18_IO	56	15
1.8V_XO	VDD18_XTAL	32	60

Title: Antenna

Size: B | Document Number: CONNECTIVITY_CCN0108_MT6631 | Rev: V1.0

Date: Friday, July 29, 2021 | Sheet 38 of 40

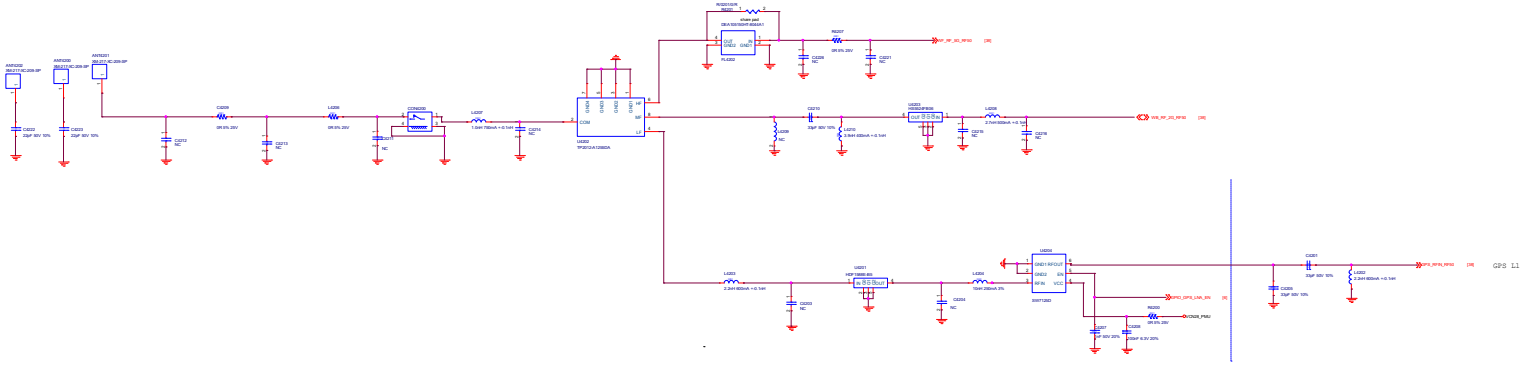

	<Title>		
Size	Document Number		Rev
<Size>	<Doc>		<Rev><Date>
Date	Friday, July 29, 2011	Sheet 10 of 20	

52_NFC

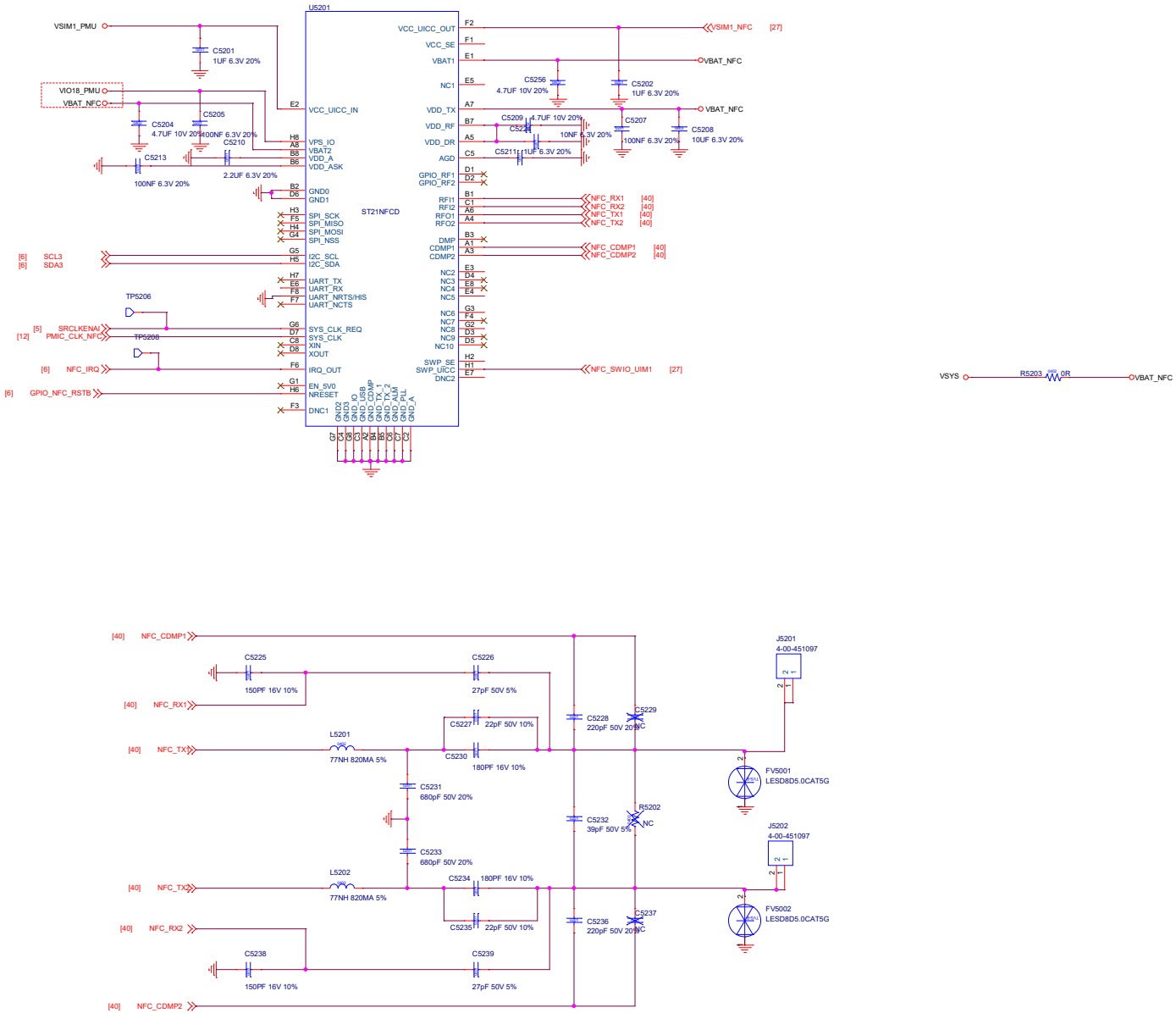

Title	52_ANT_GPS_WIFI
Size A2	Document Number <Doc>
Rev	<RevCode>
Date:	Friday, July 23, 2021
Sheet	40 of 40