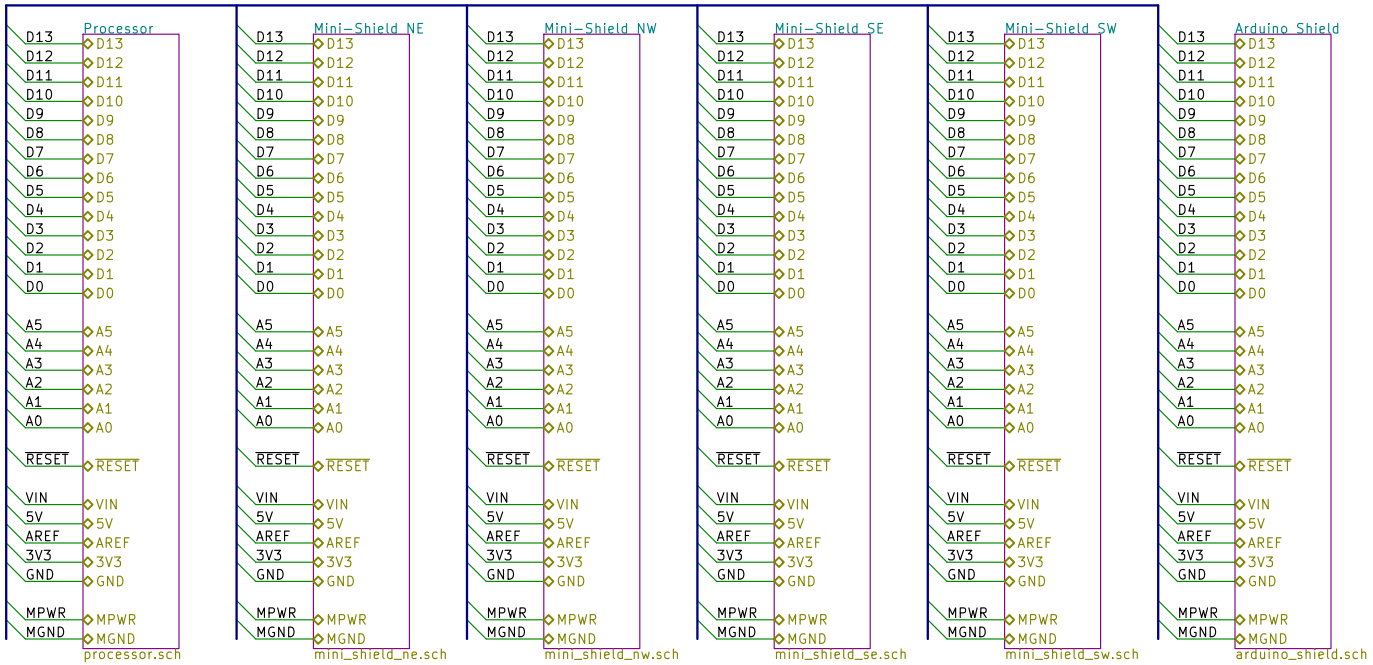

Sheet: /
File: busino.sch

Title: Busino -- Top Level

Size: A	Date: Fri 03 Oct 2014	Rev: C
KiCad E.D.A. kicad (2014-jul-16 BZR unknown)-product		Id: 1/7

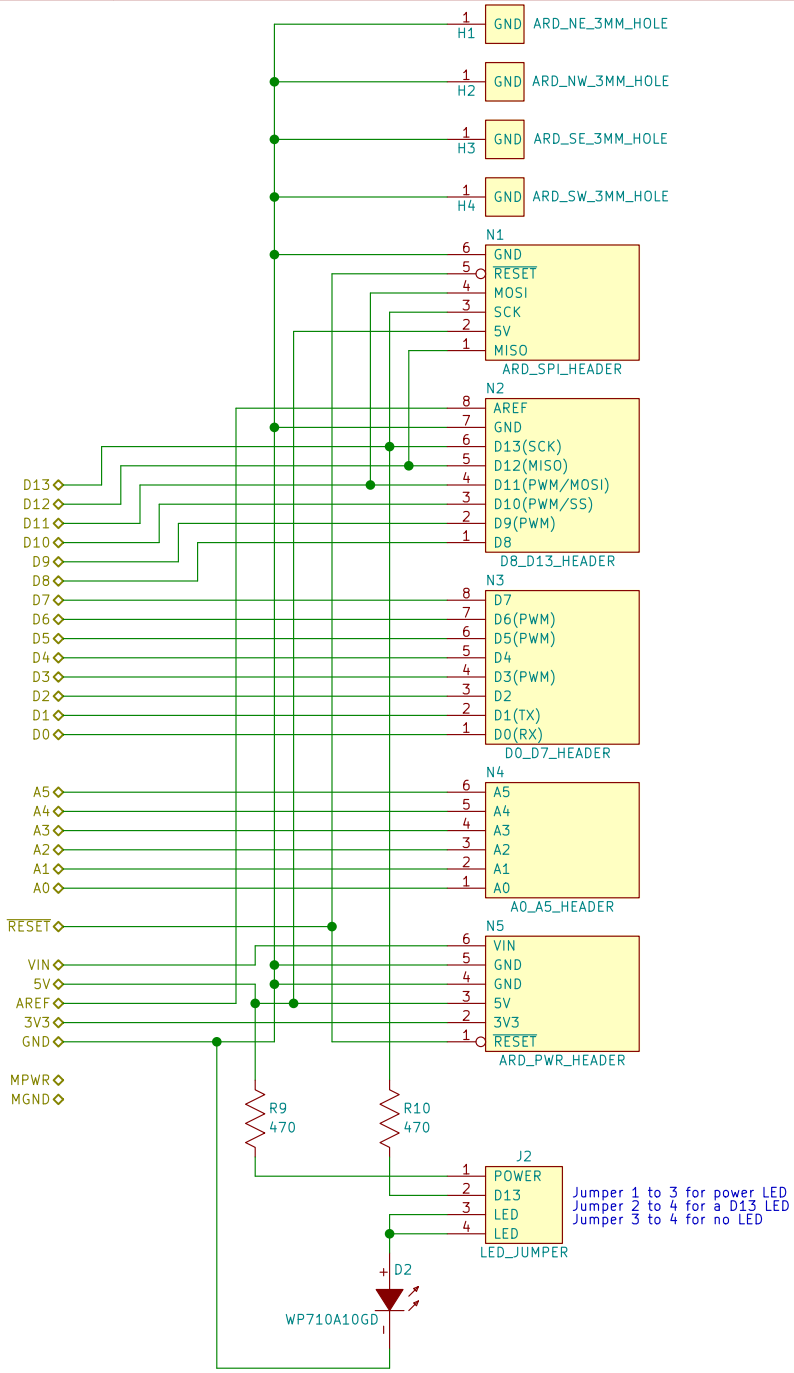

Sheet: /Arduino Shield/
File: arduino_shield.sch

Title: Busino: Arduino Shield Connections

Size: A	Date: Fri 03 Oct 2014	Rev: C
KiCad E.D.A. kicad (2014-jul-16 BZR unknown)-product		Id: 2/7

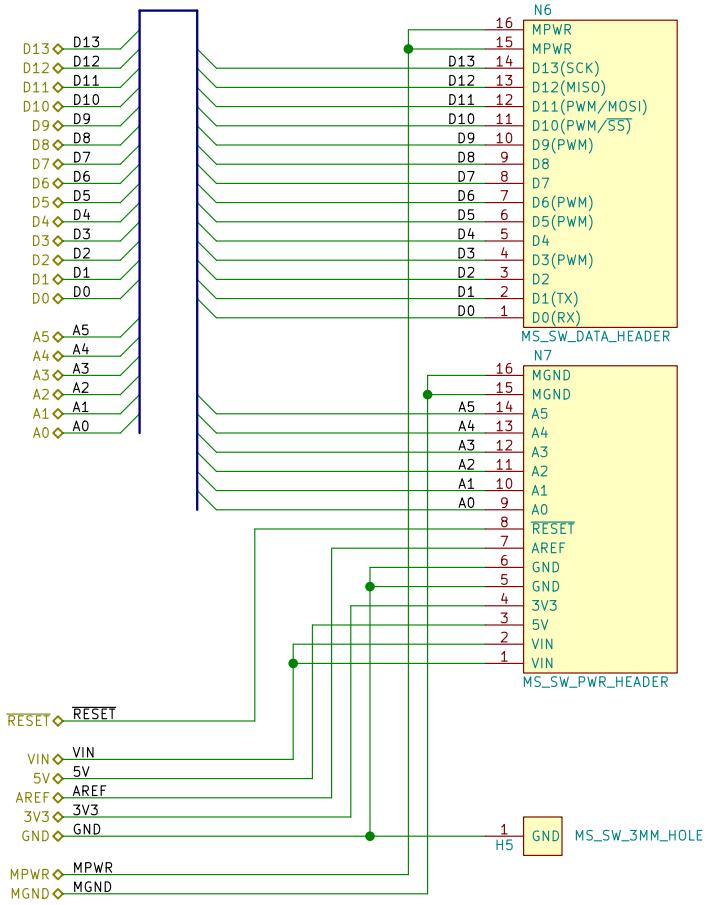

Sheet: /Mini-Shield SW/
File: mini_shield_sw.sch

Title: Busino: South West Mini-Shield Connections

Size: A	Date: Fri 03 Oct 2014	Rev: C
KiCad E.D.A. kicad (2014-jul-16 BZR unknown)-product		Id: 3/7

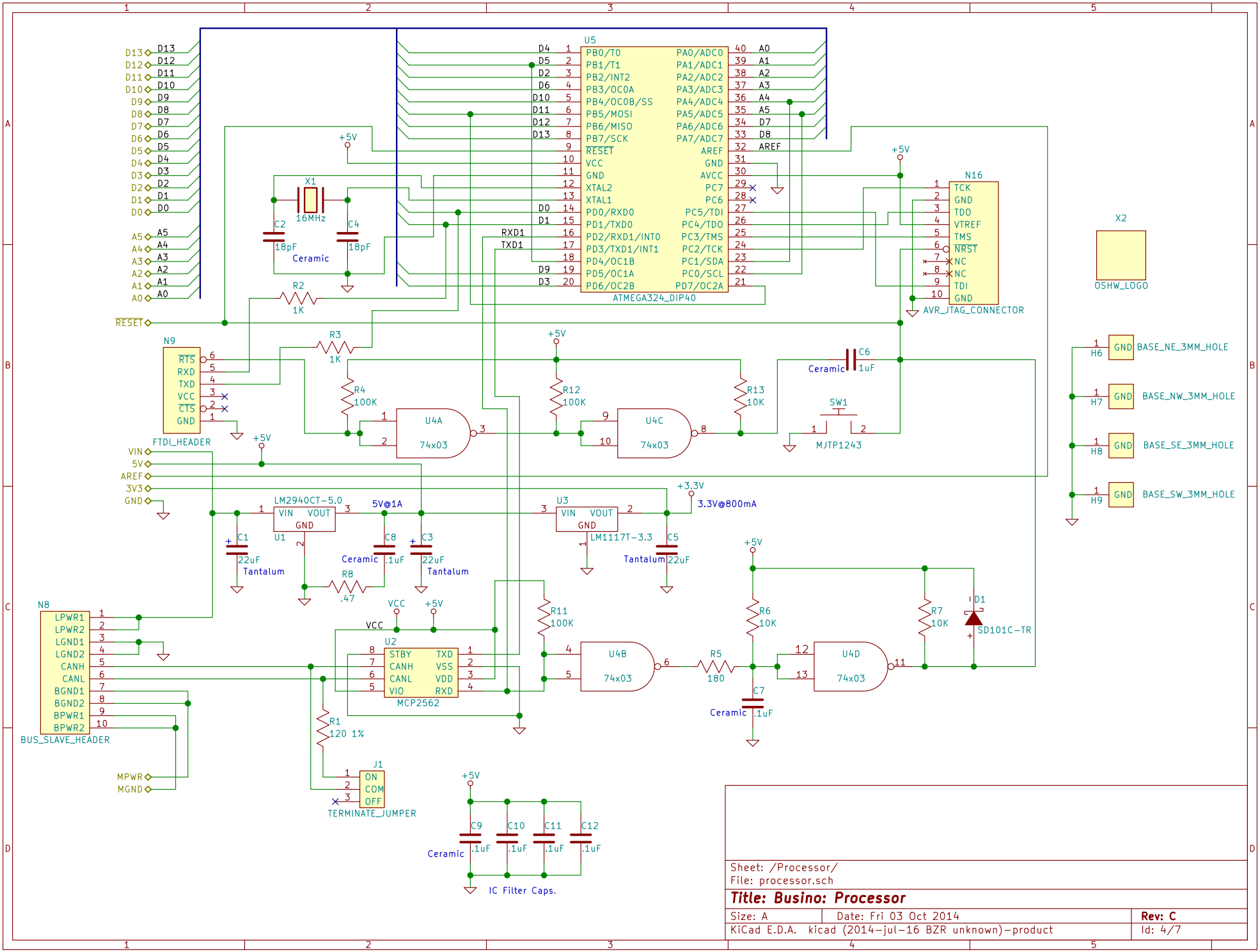
U5
ATMEGA324_DIP40
PB0/T0
PB1/T1
PB2/INT2
PB3/OC0A
PB4/OC0B/SS
PB5/MOSI
PB6/MISO
PB7/SCK
RESET
VCC
GND
XTAL2
XTAL1
PD0/RXD0
PD1/TXD0
PD2/RXD1/INT0
PD3/TXD1/INT1
PD4/OC1B
PD5/OC1A
PD6/OC2B
PA0/ADC0
PA1/ADC1
PA2/ADC2
PA3/ADC3
PA4/ADC4
PA5/ADC5
PA6/ADC6
PA7/ADC7
AREF
GND
AVCC
PC7
PC6
PC5/TDI
PC4/TDO
PC3/TMS
PC2/TCK
PC1/SDA
PC0/SCL
PD7/OC2A
X1
16MHz
C2
18pF
Ceramic
C4
18pF
R2
1K
N16
AVR_JTAG_CONNECTOR
TCK
GND
TDO
VTREF
TMS
NRST
NC
NC
TDI
GND
X2
OSHW_LOGO
N9
FTDI_HEADER
RTS
RXD
TXD
VCC
CTS
GND
R3
1K
R4
100K
U4A
74x03
R12
100K
U4C
74x03
R13
10K
C6
Ceramic
1uF
SW1
MJTP1243
H6
BASE_NE_3MM_HOLE
H7
BASE_NW_3MM_HOLE
H8
BASE_SE_3MM_HOLE
H9
BASE_SW_3MM_HOLE
VIN
5V
AREF
3V3
GND
LM2940CT-5.0
U1
VIN
VOUT
GND
5V@1A
C1
22uF
Tantalum
C8
Ceramic
.1uF
C3
22uF
Tantalum
R8
.47
U3
LM1117T-3.3
C5
Tantalum
22uF
3.3V@800mA
N8
BUS_SLAVE_HEADER
LPWR1
LPWR2
LGND1
LGND2
CANH
CANL
BGND1
BGND2
BPWR1
BPWR2
MPWR
MGND
U2
MCP2562
STBY
CANH
CANL
VIO
TXD
VSS
VDD
RXD
R11
100K
U4B
74x03
R5
180
C7
Ceramic
.1uF
R6
10K
U4D
74x03
R7
10K
D1
SD101C-TR
R1
120 1%
J1
TERMINATE_JUMPER
ON
COM
OFF
C9
C10
C11
C12
.1uF
Ceramic
IC Filter Caps.
Sheet: /Processor/
File: processor.sch
Title: Busino: Processor
Size: A
Date: Fri 03 Oct 2014
Rev: C
KiCad E.D.A. kicad (2014-jul-16 BZR unknown)-product
Id: 4/7

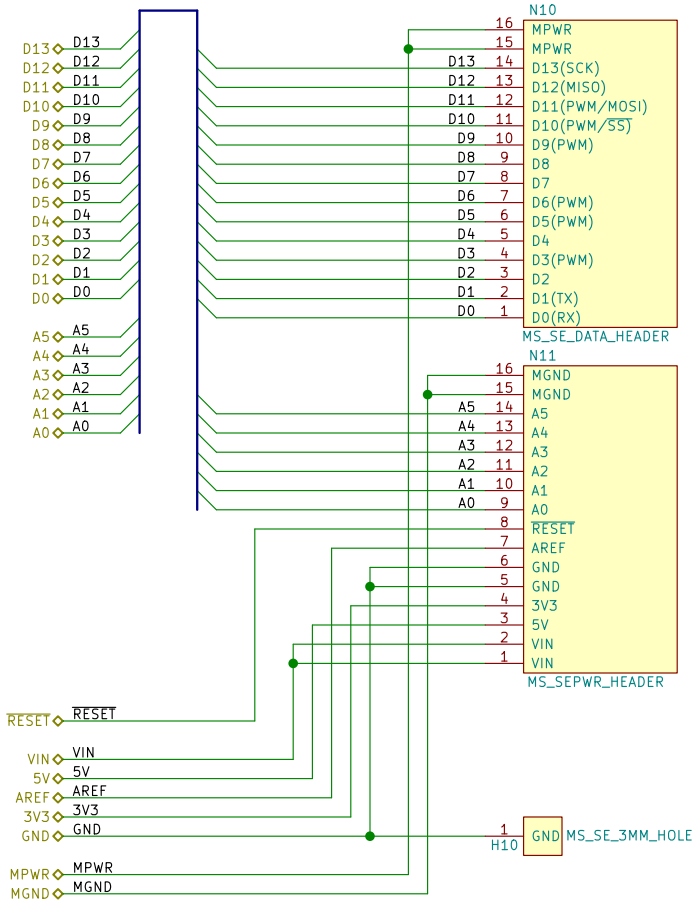

Sheet: /Mini-Shield SE/
File: mini_shield_se.sch

Title: Busino: South East Mini-Shield Connections

Size: A	Date: Fri 03 Oct 2014	Rev: C
KiCad E.D.A. kicad (2014-jul-16 BZR unknown)-product		Id: 5/7

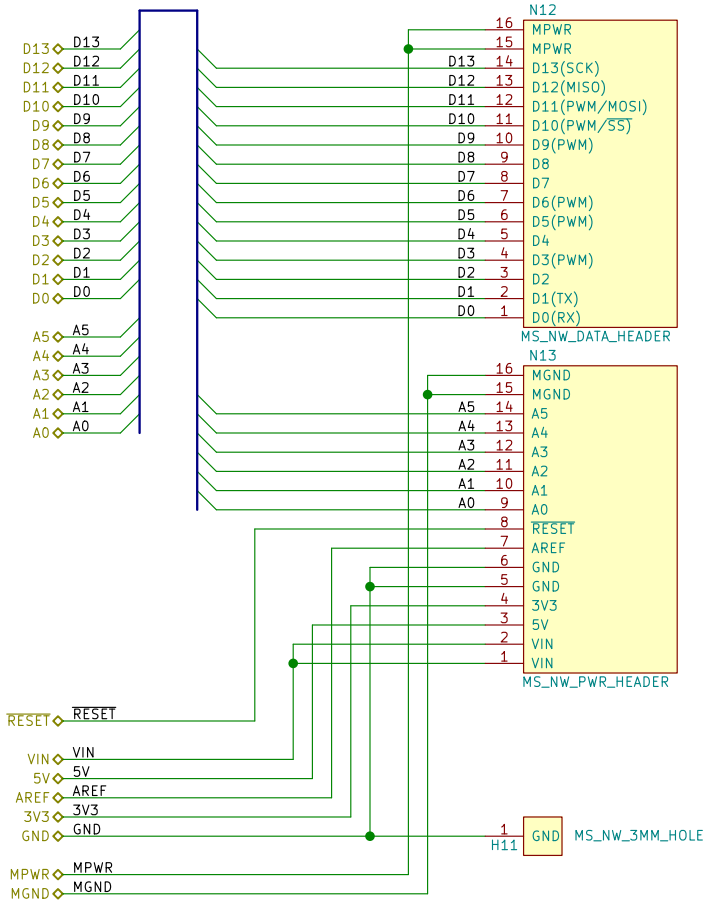

Sheet: /Mini-Shield NW/
File: mini_shield_nw.sch

Title: Busino: North West Mini-Shield Connections

Size: A	Date: Fri 03 Oct 2014	Rev: C
KiCad E.D.A. kicad (2014-jul-16 BZR unknown)-product		Id: 6/7

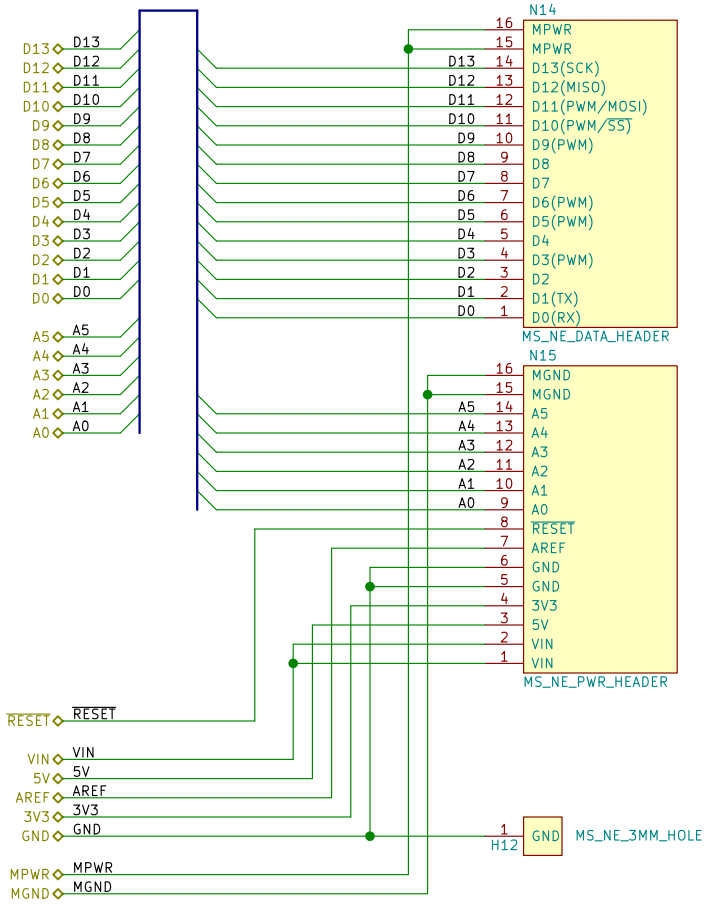

Sheet: /Mini-Shield NE/
File: mini_shield_ne.sch

Title: Busino: North Eash Mini-Shield Connections

Size: A	Date: Fri 03 Oct 2014	Rev: C
KiCad E.D.A. kicad (2014-jul-16 BZR unknown)-product		Id: 7/7