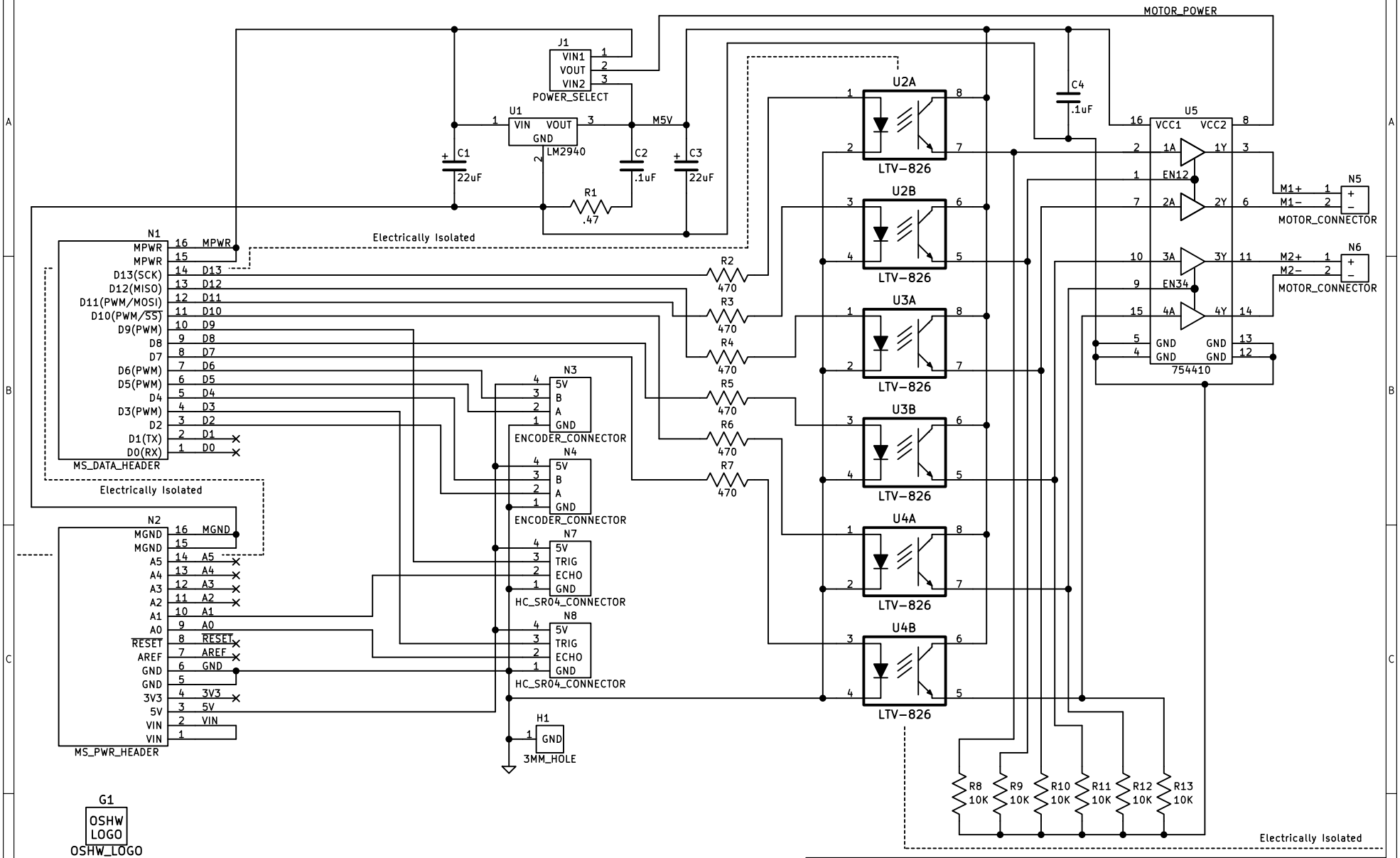

Sheet: /
File: mini_bridge_encoders_sonar.sch

Title: Bridge/Encoders/Sonars Mini-Shield

Size: A	Date: 10 Jul 2014	Rev: B
KiCad E.D.A. kicad (2014-jan-25)-product		Id: 1/1