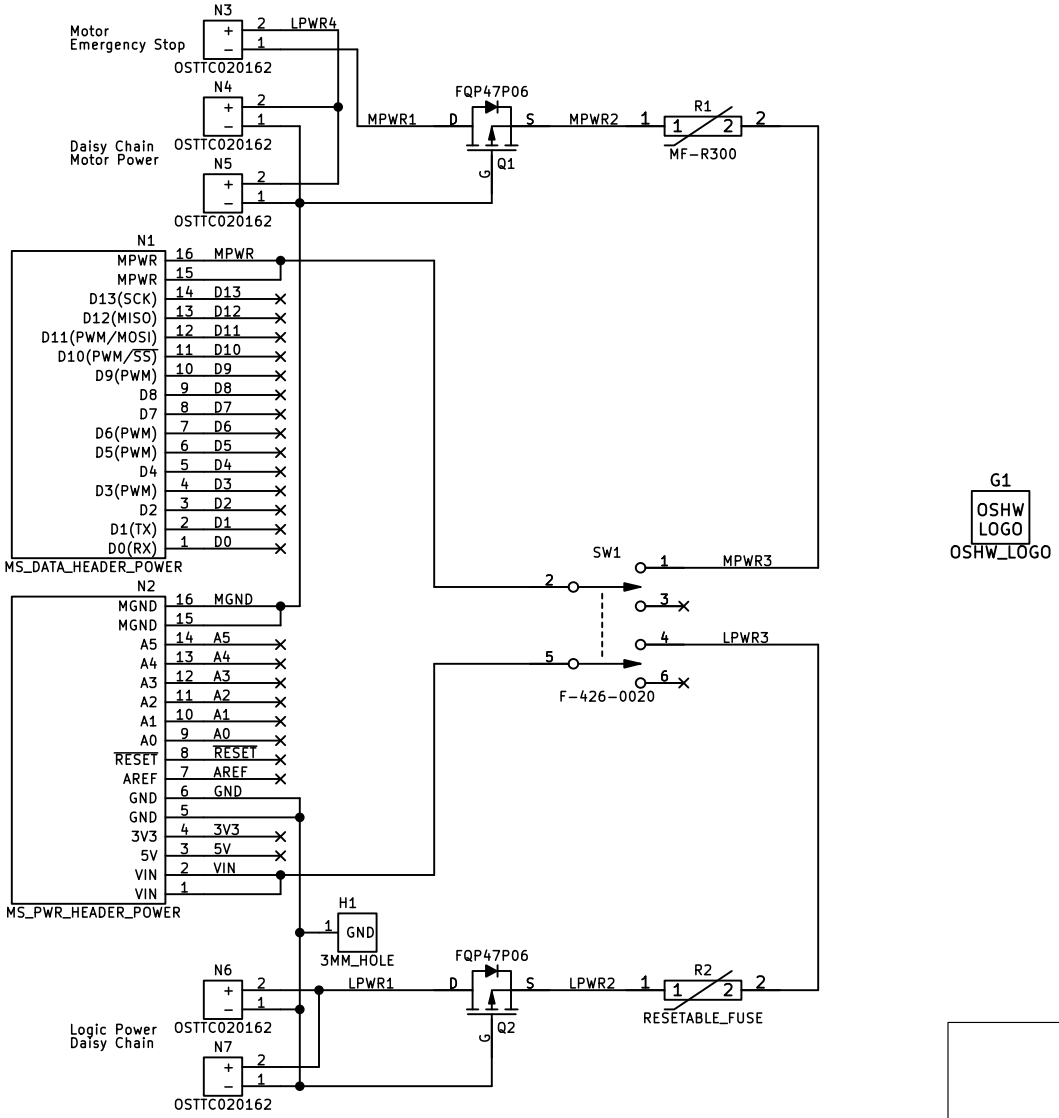

Sheet: /
File: mini_power.sch

Title: Mini-Shield Power

Size: A	Date:	Rev:
KiCad E.D.A. kicad (2014-jan-25)-product		Id: 1/1